BOROUGH OF CARTERET

ADVERTISEMENT AND NOTICE TO BIDDERS

Notice is hereby given that sealed Bids will be received by the Borough of Carteret for: "**The Carteret Pier Pavilion**", opened and read aloud at Borough Hall, 2nd Floor Council Chambers, 61 Cooke Avenue, Carteret, New Jersey, 07008 on (**Friday, August 11, 2023 at 10:00 AM**) prevailing local time.

The project consists of the construction of a three season steel & wood construction pavilion as shown on the Plans and in the specifications.

Bidding Documents can be requested by sending an email to inquiry@dmrarchitects.com on/after June 30,2023 at the Architect's office; DMR Architects, 777 Terrace Ave., 6 th Floor, Hasbrouck Heights, New Jersey 07604, during business hours.

Please note in order to be on the list for the potential bidders the bids must be purchased from the Architect by the bidders themselves, bids won't be accepted from the bidders who are not on the Architect's list of plan holders.

A **non-mandatory Pre-Bid Conference** will be held on site, at 200 Middlesex Ave, Carteret, NJ 07008, on Monday July 17, 2023 at 10:00AM.

Bids must be furnished on the proposal sheets included in the Contract Documents, enclosed in a sealed envelope and addressed to the Mayor and Borough Council, Borough of Carteret, New Jersey and plainly marked on the outside with the name and address of the bidder and the Contract Number and Title.

Each bid must be accompanied by a certified check of not less than ten (10%) percent of the bid payable without any conditional endorsement as a guarantee that in case the contract is awarded to the bidder, he will within ten (10) days thereafter execute such contract and furnish satisfactory performance bond. Upon failure to do so, he shall forfeit the bid security as liquidated damages and the acceptance of the bid will be contingent upon the fulfillment of this requirement by the bidder. No interest shall be allowed upon any such certified check. A bid bond in the amount of ten (10%) percent of the bid may be substituted for certified check, except the amount of the bid security shall not be less than $500.00 - nor more than $20,000.00. Each bid must be accompanied by a Certificate of Experience and Certificate of Equipment.

Each bid must also be accompanied by a certificate of Consent of Surety from a bonding company licensed to do business in the State of New Jersey guaranteeing that if the proposal of the bidder be accepted they will furnish the bond set forth in the Instructions to Bidders and the acceptance of the bid will be contingent upon the fulfillment of this requirement.

Evaluation and award of the bid shall involve a thorough review of the Contractor's technical capability, corporate experience, quality, past performance, technical plans, schedules, other submittals, and bid prices. The Borough reserves the right to increase or decrease quantities specified in the manner designated in the Specifications. The Borough reserves the right to award this contract based on funds available.

Bidders are required to comply with the requirements of the Americans with Disabilities Act (N.J.S.A.10:5-31 et seq.) and Affirmative Action (N.J.A.C. 17:27) and with the disclosure provisions of N.J.S.A. 19:44A-20.13. The successful bidder shall be required to comply with the provisions of the New Jersey Prevailing Wage Act, Chapter 150 of the Laws of 1963, effective January 1, 1964.

Bidders shall comply with N.J.S.A. 52:32-44 latest revision, regarding Business Registration with the New Jersey Division of Revenue.

During the performance of this contract the Contractor agrees to comply with the requirements of P.L. 1975, c. 127 (N.J.A.C. 17:27), all requirements of the State of New Jersey Worker Health and Safety Act (N.J.A.C. 12:110 et seq.) as amended and the United States Occupational Safety and Health Act (OSHA) (29 CFR 1910), as amended with regard to worker and jobsite safety.

No bidder may withdraw his bid for a period of sixty (60) days after the date set for the opening thereof. The successful bidder will be required to furnish a surety company bond in the full amount of the contract price indemnifying the Borough of Carteret, New Jersey for all proceedings, suits or actions of any kind of description and conditional for the faithful performance of the work.

The Borough of Carteret reserves the right to reject any and all proposals to the extent permitted by law (in accordance with N.J.S.A. 40A:11-13.2 and applicable case law). An award will be made or proposals will be rejected within sixty (60) calendar days after the opening of the proposals, unless the Mayor and Council extend the award period.

All Addenda will be issued in electronic format (PDF) to the registered bidders. It is the sole responsibility of the respondent to be aknowledge the receipt of all addenda related to the procurement.

Respondents shall comply with the said requirements.

RICARDO LLANOS – QUALIFIED PURCHASING AGENT

CARTERET PIER PAVILION

AT WATERFRONT PARK
200 MIDDLESEX AVENUE BLOCK 201 LOT 4
CARTERET, NEW JERSEY 07008

FOR THE BOROUGH OF CARTERET, NEW JERSEY

CARTERET PIER PAVILION
WATERFRONT PARK
200 MIDDLESEX AVENUE BLOCK 201 LOT 4
CARTERET, NEW JERSEY 07008

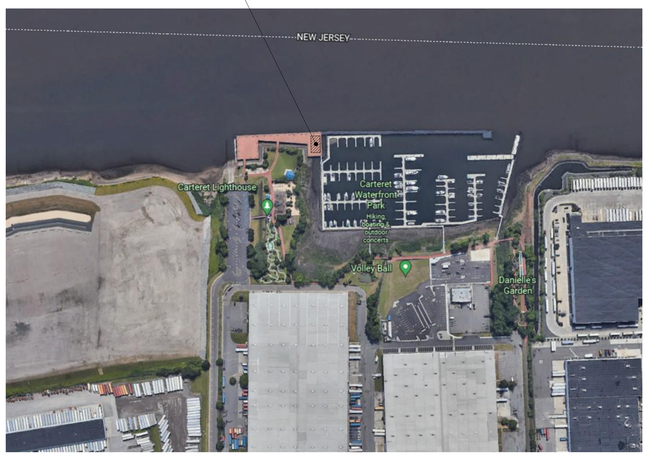

Borough of CARTERET New Jersey

GEOTECHNICAL & STRUCTURAL ENGINEER:

McLaren ENGINEERING GROUP

MEP ENGINEER:

KeRi ENGINEERING PC

KITCHEN DESIGN CONSULTANT:

RAYMOND/RAYMOND ASSOCIATES
FOOD SERVICE CONSULTANTS SINCE 1936

ARCHITECT:

DMR ARCHITECTS

Key Plan

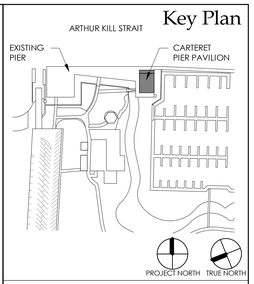

PROJECT
CARTERET PIER PAVILION
WATERFRONT PARK
200 MIDDLESEX AVENUE BLOCK 201 LOT 4
CARTERET, NEW JERSEY 07008

GEOTECHNICAL & STRUCTURAL ENGINEER
McLaren ENGINEERING GROUP
McLaren Technical Services, Inc.
530 Chestnut Ridge Road
Woodcliff Lake, New Jersey 07677
201.775.6000 | www.mgmclaren.com

MEP ENGINEER
KeRi ENGINEERING PC
911 SPRINGFIELD ROAD, SUITE 2
UNION, NEW JERSEY 07083
973.866.5374
INFO@KERIENGINEERING.COM

FOOD SERVICE DESIGN CONSULTANT
RAYMOND/RAYMOND ASSOCIATES
FOOD SERVICE CONSULTANTS SINCE 1936
44 ST. JOHN STREET
GOSHEN, NEW YORK
845.360.5112
INFO@RRADESIGNS.COM

DMR
ARCHITECTURE
PLANNING
ENGINEERING
INTERIORS
CONSULTING
www.dmrarchitects.com

MEMBERS OF THE AMERICAN INSTITUTE OF ARCHITECTS

LLOYD A. ROSENBERG	NJ - AI 05526
KURT A. VIERHEILIG	NJ - AI 17809
PRADEEP KAPOOR	NY - 042197
FERNANDO ROBLEDO	NY - 033804
JANET PINI	NJ - AI 02102900

NOT VALID FOR BIDDING UNLESS SIGNED AND SEALED BY ARCHITECT

777 Terrace Avenue, 6th Floor
Hasbrouck Heights, New Jersey 07604
Tel 201 - 288 - 2600 || Fax 201 - 288 - 2662

NCARB NATIONAL COUNCIL OF ARCHITECTURAL REGISTRATION BOARDS

CO - 306 184 CT - 05438 NJ - AI 05526
NJ-BOARD OF PROFESSIONAL PLANNERS| - LI 015584
NY - 013023-1 PA - RA - 13437-B

DWG
COVER SHEET

SCALE 1" = 200'-0"

DATE	DESCRIPTION	DRN	CHK
06/26/2023	BID SET	JO/MD	DG

REV.	DATE	DESCRIPTION		

PROJECT NO.	SHEET NO.
5146	T1.0

Copyright © 2023 by DMR

PLOT DATE: 6/27/2023 2:54:10 PM

C:\Users\mdeck\Documents\Revit\5146_Carteret_Pavilion_mdeckR24.rvt
6/27/2023 2:54:10 PM

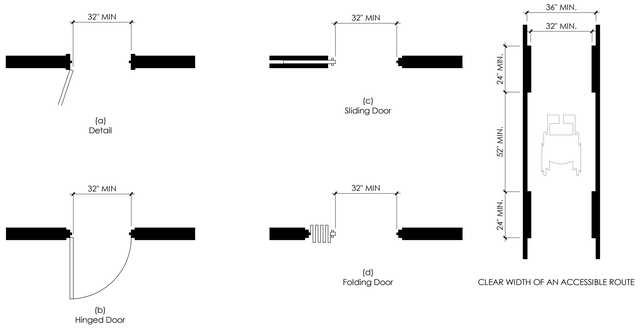

CLEAR DOORWAY WIDTH AND DEPTH NEW BUILDINGS

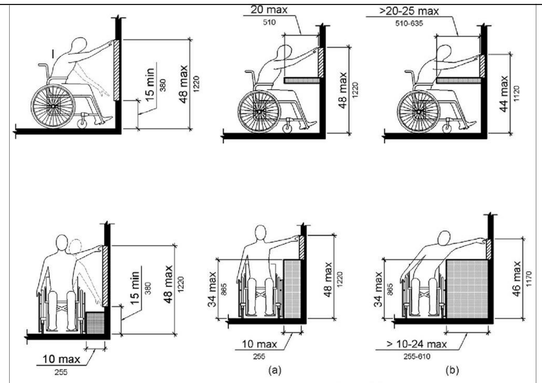

ACCESSIBLE REACHING RANGES NEW BUILDINGS

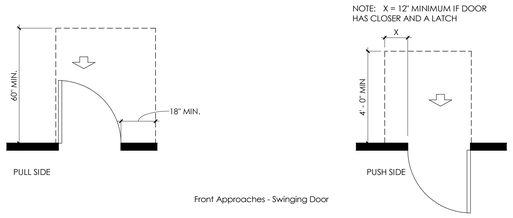

Front Approaches - Swinging Door

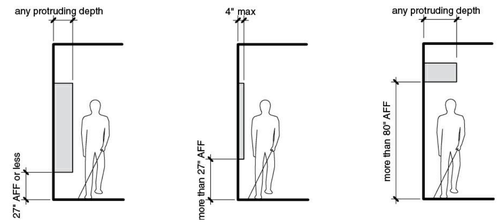

LIMITS OF PROTRUDING OBJECTS NEW BUILDINGS

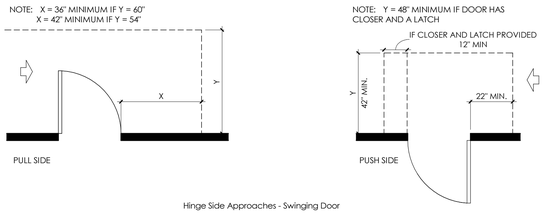

Hinge Side Approaches - Swinging Door

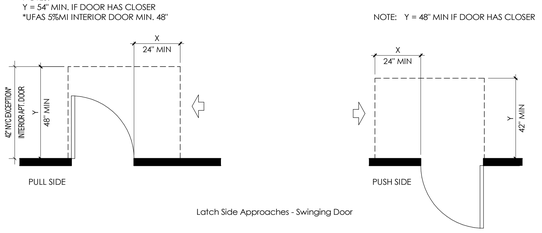

Latch Side Approaches - Swinging Door

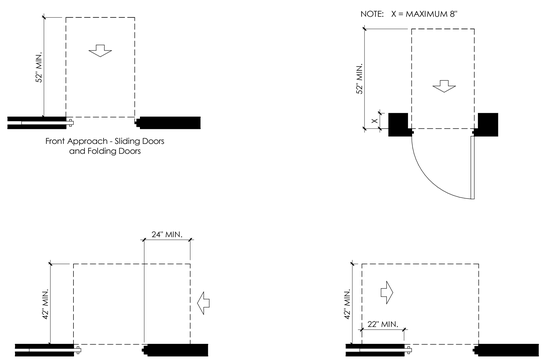

MANEUVERING CLEARANCES AT DOORS NEW BUILDINGS

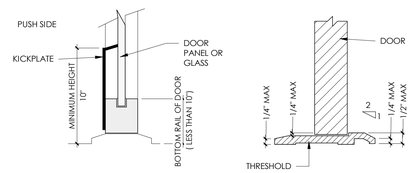

DOOR SURFACE AND THRESHOLD NEW BUILDINGS

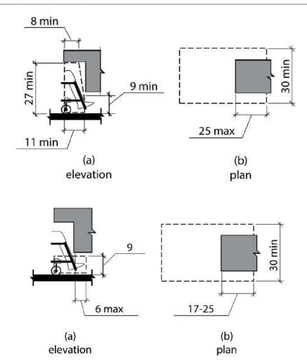

KNEE AND TOE CLEARANCES NEW BUILDINGS

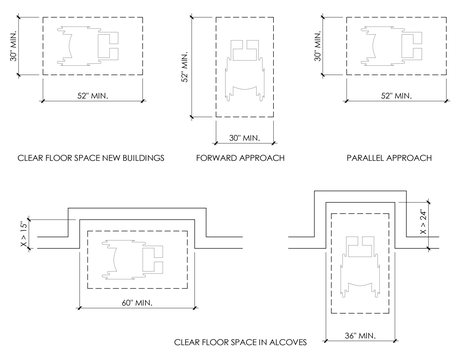

MINIMUM CLEAR FLOOR SPACE FOR WHEELCHAIRS NEW BUILDINGS

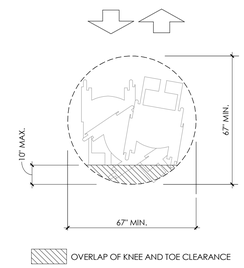

CIRCULAR TURNING SPACE - NEW BUILDINGS SIZE AND OVERLAP

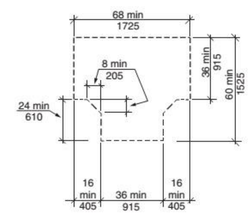

T-SHAPED TURNING SPACE NEW BUILDINGS - OPTION 1

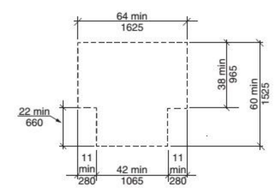

T-SHAPED TURNING SPACE NEW BUILDINGS - OPTION 2

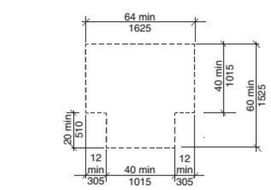

T-SHAPED TURNING SPACE NEW BUILDINGS - OPTION 3

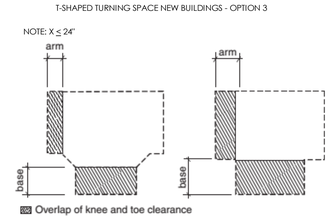

T-SHAPED TURNING SPACE NEW BUILDINGS - OVERLAP

WHEELCHAIR TURNING SPACE NEW BUILDINGS

BARRIER FREE DIAGRAMS 3/8" = 1'-0" 2

DRAWING LIST

#	SHEET DESCRIPTION
GENERAL	
T1.1	DRAWING LIST, ACCESSIBLE MOUNTING HEIGHTS & BARRIER FREE DIAGRAMS
T1.0	COVER SHEET
T1.2	NOTES, CODE ANALYSIS, ABBREVIATIONS & SYMBOLS
EG1.1	LIFE SAFETY & EGRESS PLAN
ARCHITECTURAL	
D1.0	PIER DEMOLITION PLAN
A1.0	PAVILION CONSTRUCTION / POWER PLAN
A1.1	MECHANICAL LOFT CONSTRUCTION / POWER PLAN
A2.0	ROOF PLAN & DETAILS
A3.0	PAVILION & ATTIC REFLECTED CEILING PLAN & DETAILS
A4.0	ENLARGED BAR AREA PLAN, ELEVATIONS & SECTION DETAILS
A4.1	ENLARGED PLAN DETAILS
A5.0	EXTERIOR ELEVATIONS
A5.1	INTERIOR ELEVATIONS
A6.0	PAVILION SECTIONS
A7.0	WALL SECTIONS
A7.1	SECTION DETAILS
A9.0	GUARDRAIL ELEVATIONS & DETAILS
A10.0	EXTERIOR WALL & PARTITION TYPES
A11.0	DOOR TYPES, DOOR SCHEDULE, GLAZING ELEVATIONS & DETAILS
A12.0	FINISHES PLAN & SCHEDULE
A13.0	SIGNAGE
STRUCTURAL	
S001	GENERAL NOTES, ABBREVIATIONS, & SHEET INDEX
S002	STRUCTURAL NOTES
S100	PAVILION FRAMING PLAN
S101	ROOF FRAMING PLAN
S200	COLUMN SCHEDULE
S201	PAVILION ELEVATIONS
S300	TYPICAL DETAILS
S301	TYPICAL DETAILS
S302	TYPICAL DETAILS
FIRE PROTECTION	
FP-001	ABBREVIATIONS, SYMBOLS & NOTES
FP-101	PLUMBING GROUND FLOOR NEW WORK
FP-301	FIRE PROTECTION SPECIFICATIONS
PLUMBING	
P-001	ABBREVIATIONS, SYMBOLS & NOTES
P-010	PLUMBING SCHEDULES
P-101	GROUND FLOOR - NEW WORK
P-201	PLUMBING DETAILS
P-301	PLUMBING SPECIFICATIONS
P-401	PLUMBING RISERS
MECHANICAL	
M-001	SYMBOLS, NOTES, ABBREVIATIONS, SPECIFICATIONS & SCHEDULES
M-101	MECHANICAL - NEW WORK
ELECTRICAL	
E-001	ABBREVIATIONS, SYMBOLS & NOTES
E-101	ELECTRICAL LIGHTING PLAN - DEMOLITION & NEW WORK
E-102	ELECTRICAL POWER & SYSTEMS - NEW WORK
E-201	ELECTRICAL SCHEDULES & SINGLE LINE DIAGRAM
E-301	ELECTRICAL DETAILS
E-401	ELECTRICAL SPECIFICATIONS
FOOD SERVICES	
FS1.0	FOOD SERVICE EQUIPMENT PLAN & SCHEDULE

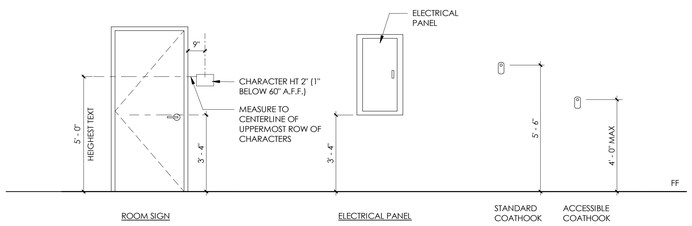

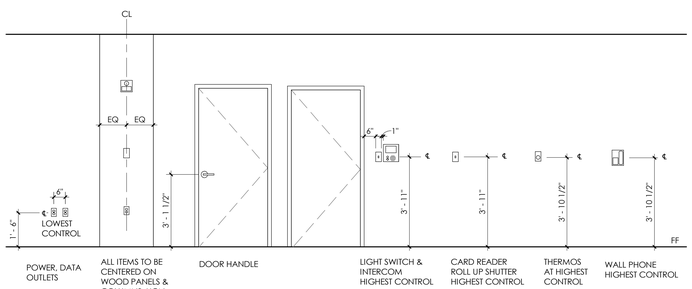

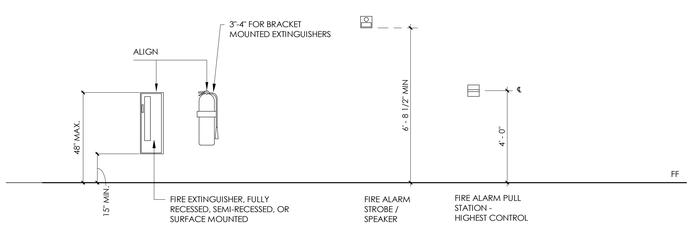

TYPICAL ACCESSIBLE MOUNTING HEIGHTS 3/8" = 1'-0" 1

Key Plan

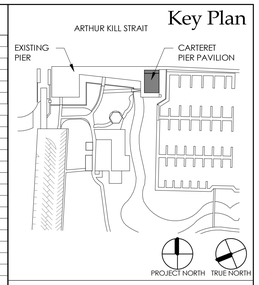

PROJECT

CARTERET PIER PAVILION

WATERFRONT PARK
200 MIDDLESEX AVENUE BLOCK 201 LOT 4
CARTERET, NEW JERSEY 07008

GEOTECHNICAL & STRUCTURAL ENGINEER

McLaren ENGINEERING GROUP
McLaren Technical Services, Inc.
530 Chestnut Ridge Road
Woodcliff Lake, New Jersey 07677
201.775.6000 | www.mgmclaren.com

MEP ENGINEER

KeRi ENGINEERING PC
911 SPRINGFIELD ROAD, SUITE 2
UNION, NEW JERSEY 07083
973.866.5374
INFO@KERIENGINEERING.COM

FOOD SERVICE DESIGN CONSULTANT

RAYMOND/RAYMOND ASSOCIATES
FOOD SERVICE CONSULTANTS SINCE 1938
44 ST. JOHN STREET
GOSHEN, NEW YORK
845.360.5112
INFO@RRADESIGNS.COM

DMR
ARCHITECTURE
PLANNING
ENGINEERING
INTERIORS
CONSULTING
www.dmrarchitects.com

MEMBERS OF THE AMERICAN INSTITUTE OF ARCHITECTS

LLOYD A. ROSENBERG	NJ - AI 05526
KURT A. VIERHEILIG	NJ - AI 17809
PRADEEP KAPOOR	NY - 042197
FERNANDO ROBLEDO	NY - 033804
JANET PINI	NJ - AI 02102900

NOT VALID FOR BIDDING UNLESS SIGNED AND SEALED BY ARCHITECT

777 Terrace Avenue, 6th Floor
Hasbrouck Heights, New Jersey 07604
Tel 201 - 288 - 2600 || Fax 201 - 288 - 2662

NCARB NATIONAL COUNCIL OF ARCHITECTURAL REGISTRATION BOARDS

CO - 306 184 CT - 05438 NJ - AI 05526
NJ-BOARD OF PROFESSIONAL PLANNERS) - LI 01584
NY - 013025-1 PA - RA - 13437-B

DWG

DRAWING LIST, ACCESSIBLE MOUNTING HEIGHTS & BARRIER FREE DIAGRAMS

SCALE As indicated

DATE	DESCRIPTION	DRN	CHK
06/26/2023	BID SET	JC/MD	DG

REV.	DATE	DESCRIPTION		

PROJECT NO.	SHEET NO.
5146	T1.1

Copyright © 2023 by DMR PLOT DATE: 6/27/2023 2:54:11 PM

C:\Users\mcrick\Documents\Revit\5146_Carteret_Pavilion_mcrickR24.rvt
6/27/2023 2:54:11 PM

1. THE DRAWINGS AND THE SPECIFICATIONS ARE COMPLIMENTARY, AND THEIR INTENT IS TO INCLUDE ALL ITEMS NECESSARY FOR THE PROPER EXECUTION AND COMPLETION OF THE WORK.

2. THE ORGANIZATION OF THE SPECIFICATIONS AND DRAWINGS SHALL NOT CONTROL THE CONTRACTOR IN DIVIDING THE WORK AMONG THE SUBCONTRACTORS, OR IN ESTABLISHING THE WORK PERFORMED BY ANY TRADE. CONTRACTOR IS RESPONSIBLE FOR COORDINATION OF WORK BETWEEN ALL TRADES.

3. ALL WORK SHALL CONFORM TO CODES, ORDINANCES, RULES AND REGULATIONS OF ANY FEDERAL, STATE, COUNTY OR MUNICIPAL AGENCY HAVING JURISDICTION. THE RULES AND REGULATIONS OF OSHA SHALL BE ADHERED TO FOR THIS PROJECT.

4. ALL WORK SHALL CONFORM TO THE CONTRACT DOCUMENTS. FOR PURPOSES OF THIS PROJECT, CONTRACT DOCUMENTS SHALL INCLUDE: THE OWNER-CONTRACTOR AGREEMENT,THE DRAWINGS, THE SPECIFICATIONS AND ANY ADDENDA AND REVISIONS ISSUED BY THE ARCHITECT.

5. THE CONTRACTOR SHALL OBTAIN, AND PAY ALL FEES FOR BUILDING DEPARTMENT APPROVALS AND PERMITS, CONTROLLED INSPECTIONS, APPROVALS AND PERMITS OF OTHER AGENCIES WHEN REQUIRED.

6. CONTRACTOR SHALL REVIEW THE CONTRACT DOCUMENTS, VERIFY ALL DIMENSIONS AND FIELD CONDITIONS. ANY DISCREPANCIES OR OMISSIONS SHALL BE BROUGHT TO THE IMMEDIATE ATTENTION OF THE ARCHITECT FOR CLARIFICATION PRIOR TO COMMENCEMENT OF THE WORK.

7. IF DOCUMENTS ARE AT VARIANCE WITH ONE ANOTHER ON A PARTICULAR ITEM OR ITEMS, CONTRACTOR SHALL BASE HIS BID ON THE BETTER QUALITY OR MORE EXPENSIVE OF THE CONDITIONS SHOWN. ITEMS OR EQUIPMENT SPECIFIED UNDER ONE TRADE SHALL BE BINDING AS IF SPECIFIED UNDER ALL RELATED TRADES.

8. UPON AWARD OF THE CONTRACT FOR CONSTRUCTION, THE CONTRACTOR SHALL IMMEDIATELY REVIEW AND COORDINATE THE SCHEDULING OF CONSTRUCTION, WITHIN (10) DAYS FOLLOWING AWARD OF CONTRACT THE CONTRACTOR SHALL SUBMIT A DETAILED PROJECT SCHEDULE INCORPORATING THE WORK OF THE CONTRACTOR AND ITS RESPECTIVE SUBCONTRACTORS, AS WELL AS WORK BY OTHERS.

9. THE CONTRACTOR SHALL COORDINATE ALL WORK BETWEEN SUBCONTRACTORS, AND SHALL COORDINATE WITH OWNER FOR WORK TO BE PROVIDED BY OWNER'S SUBCONTRACTORS (IF APPLICABLE).

10. THE CONTRACTOR SHALL COORDINATE WITH THE TELEPHONE AND COMMUNICATIONS INSTALLATION COMPANY AND THE OWNER FOR ALL TELEPHONE AND COMMUNICATION INSTALLATION WORK. CONTRACTOR SHALL BE RESPONSIBLE FOR COORDINATING AND SCHEDULING OF TELEPHONE AND COMMUNICATIONS INSTALLATION WITH HIS WORK.

11. DO NOT SCALE DRAWINGS. ANY CLARIFICATIONS OR INFORMATION REQUIRED BY THE CONTRACTOR SHALL BE FURNISHED, UPON WRITTEN REQUEST, BY THE ARCHITECT.

12. THE CONTRACTOR SHALL VERIFY THAT CONTRACT DOCUMENTS ARE THE LATEST ISSUE PRIOR TO COMMENCEMENT OF WORK.

13. THE CONTRACTOR SHALL NOT PROCEED WITH WORK FOR WHICH IT EXPECTS ADDITIONAL COMPENSATION BEYOND THE CONTRACT AMOUNT WITHOUT WRITTEN AUTHORIZATION FROM THE ARCHITECT AND/OR OWNER. FAILURE TO OBTAIN AUTHORIZATION MAY INVALIDATE A CLAIM FOR ADDITIONAL COMPENSATION.

14. THE CONTRACTOR SHALL BE RESPONSIBLE TO ADEQUATELY BRACE AND PROTECT WORK DURING CONSTRUCTION AGAINST DAMAGE, BREAKAGE, COLLAPSE, DISTORTION AND MISALIGNMENT IN CONFORMANCE WITH APPLICABLE CODES, STANDARDS, AND GOOD PRACTICE. EXECUTION OF THE WORK SHALL NOT UNDERMINE THE STRUCTURAL INTEGRITY OF THE BUILDING.

15. THE CONTRACTOR SHALL PROVIDE SUPPORT, SHORING OR BRACING TO PROTECT THE STRUCTURAL INTEGRITY OF ANY EXISTING WALLS OR STRUCTURE NEAR OR ADJACENT TO AREAS TO BE SELECTIVELY DEMOLISHED. CONTRACTOR IS RESPONSIBLE FOR REPAIRING ANY DAMAGE OCCURRING TO EXISTING STRUCTURES WHICH ARE TO REMAIN RESULTING FROM THE WORK AT NO COST TO THE OWNER.

16. CONTRACTOR SHALL COORDINATE WORK WITH REQUIREMENTS OF THE BUILDING MANAGEMENT, INCLUDING, BUT NOT LIMITED TO, SCHEDULING TIME AND LOCATION OF DELIVERIES, BUILDING ACCESS, WORKER PARKING, USE OF BUILDING FACILITIES, TEMPORARY UTILITIES, PROTECTION, REFUSE CONTAINERS, ETC.

17. THE CONTRACTOR SHALL PROTECT THE BUILDING PREMISES AND ALL OCCUPANTS ON THE PROJECT SITE. THE CONTRACTOR SHALL PROVIDE AND MAINTAIN ALL THE NECESSARY TEMPORARY COVERINGS AND PROTECTION, TEMPORARY PARTITIONS, AND DOORS AS REQUIRED TO PROTECT EXISTING CONSTRUCTION TO REMAIN. THE CONTRACTOR SHALL BE RESPONSIBLE FOR ALL DAMAGES CAUSED BY IMPROPER PROTECTION, AND SHALL MAKE ALL NECESSARY REPAIRS AND REPLACEMENTS WITHOUT ADDITIONAL CHARGE TO THE OWNER, OR TO PARTIES AFFECTED.

18. WORK AREAS ARE TO REMAIN SECURE AND LOCKABLE DURING CONSTRUCTION. CONTRACTOR SHALL COORDINATE WITH OWNER AND LANDLORD TO ENSURE SECURITY. THE CONTRACTOR SHALL SECURE AND LOCK THE WORK AREA AND OWNER SPACE AT THE END OF EACH WORKING DAY, AND SHALL NOT PERMIT UNAUTHORIZED PERSONNEL TO CIRCULATE IN THE WORK AREA AND OWNER SPACE. CONTRACTOR SHALL PROVIDE TEMPORARY KEYS TO A OWNER REPRESENTATIVE.

19. THE CONTRACTOR SHALL SUPERVISE AND DIRECT THE WORK. THE CONTRACTOR SHALL BE SOLELY RESPONSIBLE FOR ALL CONSTRUCTION MEANS, METHODS, TECHNIQUES, SEQUENCES AND PROCEDURES, AND FOR COORDINATION OF ALL PORTIONS OF THE WORK.

20. THE CONTRACTOR SHALL PROVIDE A SUPERINTENDENT AT THE JOBSITE WHO IS FURNISHED WITH A LOCKED OFFICE AREA EQUIPPED WITH TELEPHONE SERVICE, FILES AND WORKSPACE FOR DRAWINGS, SPECIFICATIONS AND SAMPLES STORAGE. THE OWNER AND THE ARCHITECT SHALL HAVE ACCESS TO THE TELEPHONE SERVICE AND THE CONTRACT DOCUMENTS AT ALL TIMES. THE CONTRACTOR SHALL PROVIDE HARD HATS AS REQUIRED FOR USE BY DESIGNATED OWNER FIELD REPRESENTATIVES, THE ARCHITECT, AND THEIR GUESTS.

21. DURING THE ENTIRE CONSTRUCTION PERIOD, THE CONTRACTOR SHALL BE REPRESENTED AT THE JOBSITE BY A QUALIFIED SUPERINTENDENT WHO SHALL BE EMPOWERED TO ACT ON HIS BEHALF, AND WHO SHALL BE RESPONSIBLE FOR:
    1. MANAGEMENT OF ALL ASPECTS OF THE WORK INCLUDING PERIODIC MEETINGS TO REVIEW JOB PROGRESS.
    2. ESTABLISH AND MAINTAIN PROPER AND SAFE WORKING CONDITIONS AT THE JOBSITE.
    3. TRANSMITTAL OF ALL INSTRUCTIONS ISSUED BY THE ARCHITECT, OWNER AND LANDLORD.
    4. COMPLIANCE WITH APPLICABLE CODES, REGULATIONS, AND ORDINANCES.
    5. COMPLETE COORDINATION OF ALL ELEMENTS OF THE WORK.
    6. CHECKING WORK IN PLACE FOR CONFORMANCE WITH THE CONSTRUCTION DOCUMENTS.

22. THE CONTRACTOR SHALL HAVE DULY AUTHORIZED REPRESENTATIVE PRESENT AT JOBSITE TO BE RESPONSIBLE FOR RECEIVING ALL MATERIALS.DELIVERED IN CONNECTION WITH WORK

23. THE CONTRACTOR SHALL BE RESPONSIBLE FOR THE WAREHOUSING OF ALL MATERIALS TO BE INSTALLED UNDER THIS CONTRACT. THE CONTRACTOR SHALL BE RESPONSIBLE FOR RECEIVING, PROTECTING OWNER FURNISHED ITEMS, AND SHALL PROVIDE AND MAINTAIN LOCKED STORAGE ROOMS AT BUILDING PREMISES FOR THESE ITEMS.

24. THE CONTRACTOR SHALL PATCH ALL HOLES AND CHASES, BOTH ABOVE AND BELOW CEILINGS, CREATED BY THE REMOVAL OR INSTALLATION OF DUCTS, PIPES, CONDUITS, CEILINGS, ETC. PATCH CONSTRUCTION TO MATCH EXISTING AS REQUIRED, AND MAINTAIN THE FIRE RESISTANCE RATING OF FIRE SEPARATION ASSEMBLIES.

25. SPACES AROUND PIPES, DUCTS, AND CONDUITS PENETRATING FIRE RATED PARTITIONS SHALL BE FIRESTOPPED IN CONFORMANCE WITH APPLICABLE CODES.

26. THE CONTRACTOR SHALL MAINTAIN THE CONSTRUCTION PREMISES IN A NEAT AND ORDERLY CONDITION AT ALL TIMES AND SHALL KEEP THE JOBSITE FREE OF ALL UNNECESSARY TRASH AND DEBRIS. THE JOBSITE SHALL BE BROOM CLEANED AT THE END OF EACH WORKING DAY.

27. CONTRACTOR SHALL SUBMIT SHOP DRAWINGS AND SUBMITTALS TO THE ARCHITECT PRIOR TO FABRICATION AND ORDERING, AND SHALL INFORM THE ARCHITECT IN WRITING AT TIME OF SUBMISSION OF ANY PROPOSED DEVIATION FROM THE REQUIREMENTS OF THE CONTRACT DOCUMENTS.

28. CONTRACTOR SHALL MAINTAIN ALL CHANGE ORDERS AND KEEP CONTRACT DRAWINGS CURRENT AND ON SITE.

29. THE CONTRACTOR SHALL REVIEW REQUIRED SHOP DRAWINGS AND SUBMITTALS PRIOR TO SUBMISSION TO THE ARCHITECT, AND SHALL INDICATE ON THE SHOP DRAWING OR SUBMITTAL THAT SUCH REVIEW HAS TAKEN PLACE. THE ARCHITECT WILL NOT REVIEW SHOP DRAWINGS OR SUBMITTALS THAT DO NOT BEAR A SIGNED CONTRACTOR REVIEW STATEMENT. BY REVIEWING AND SUBMITTING SHOP DRAWINGS AND SUBMITTALS, THE CONTRACTOR REPRESENTS THAT HE HAS DETERMINED AND VERIFIED FIELD MEASUREMENTS, FIELD CONSTRUCTION CRITERIA, MATERIALS, CATALOG NUMBERS AND SIMILAR DATA, AND THAT EACH SHOP DRAWING AND SUBMITTAL HAS BEEN CHECKED AND COORDINATED WITH THE REQUIREMENTS OF THE CONTRACT.

30. ARCHITECTS REVIEW OF SHOP DRAWINGS AND SUBMITTALS SHALL BE FOR CONFORMANCE WITH THE DESIGN CONCEPT ONLY. ARCHITECTS REVIEW SHALL NOT BE CONSTRUED AS APPROVING DEPARTURES FROM CONTRACT REQUIREMENTS, NOR SHALL IT BE CONSTRUED AS APPROVING ANY CHANGES IN PRICING.

31. CONTRACTOR SHALL SUBMIT OPERATIONAL INSTRUCTIONS, MAINTENANCE MANUALS, AND MANUFACTURERS WRITTEN WARRANTIES FOR ALL CONTRACTOR-PROVIDED EQUIPMENT TO OWNER REPRESENTATIVE PRIOR TO REQUEST FOR FINAL PAYMENT. CONTRACTOR SHALL PROVIDE, OR SHALL ARRANGE FOR, ANY SPECIALIZED OPERATIONAL OR MAINTENANCE TRAINING. CONTRACTOR TO PROVIDE "RECORD DRAWINGS" (AS-BUILTS) AT CLOSE-OUT OF PROJECT.

32. JUST PRIOR TO OWNER OCCUPANCY, CONTRACTOR SHALL CLEAN ALL SURFACES, REMOVE TEMPORARY LABELS, CLEAN FINISHED SURFACES OF STAINS AND FOREIGN MATTER, CLEAN WINDOWS AND WINDOW TREATMENTS, VACUUM THE INSIDES OF CONVECTOR COVERS, POLISH TRANSPARENT AND GLOSSY SURFACES, CLEAN ALL EQUIPMENT AND FIXTURES, AND REPLACE FILTERS ON MECHANICAL EQUIPMENT. REMAINING CONSTRUCTION MATERIAL AND EQUIPMENT, IF ANY, SHALL BE MOVED AND TEMPORARILY SECURED IN AN AREA AS DIRECTED BY THE OWNER.

33. ALL RATED WALL CONSTRUCTION SHALL MEET THE FIRE RESISTIVE RATINGS AND OTHER REQUIREMENTS OF LOCAL LAWS, ORDINANCES, REGULATIONS AND AUTHORITIES HAVING JURISDICTION.

34. THE CONTRACTOR SHALL PATCH ALL CUTTING BY MECHANICAL AND ELECTRICAL TRADES AND ALL ADDITIONAL CUTTING BY OTHERS. MATCH ADJACENT MATERIALS AND FINISHES.

35. THE CONTRACTOR IS TO FURNISH AND INSTALL ALL ANGLES, STRUTS, BRACKETS, TOGGLES, EYE BOLTS, ETC. WHEREVER NECESSARY TO PROPERLY SUPPORT, BRACE OR REINFORCE ALL FINISHES, FRAMES, EQUIPMENT, ETC.

36. ALL PIPE SPACES AND DUCT SPACES SHALL BE ENCLOSED AND FIRE STOPPED BY A PARTITION OF THE REQUIRED RATING.

37. ALL ELECTRICAL OUTLETS, HVAC PIPING, DUCTWORK, REGISTERS, AND GRILLES SHOWN ON THE ARCHITECTURAL DRAWINGS ARE INDICATED TO SET THE GENERAL LOCATION FOR SUCH COMPONENTS. EACH CONTRACTOR SHALL REFER TO THE MECHANICAL AND ELECTRICAL DRAWINGS FOR THE COMPLETE LAYOUT OF EACH RESPECTIVE ITEM.

38. THE CONTRACTOR SHALL FURNISH AND INSTALL ENCLOSURES AND CHASES, CONDUITS, ETC. NECESSARY TO FURR IN PIPES AND CHASES OR TO CONTINUE THE NORMAL LINE OF WALLS AND PARTITIONS SO THAT PIPES ARE NOT EXPOSED.

39. PARTITIONS SHALL BE CONTINUOUS OVER ALL BUILT-IN EQUIPMENT WHERE SHOWN ON PLANS AND DETAILS. FURNISH NECESSARY ANGLES, HANGERS, ETC. TO CARRY THESE PARTITIONS.

40. ALL NEW PIPING AND ELECTRICAL CONDUITS SHALL BE CONCEALED WITHIN NEW PARTITIONS OR CHASES WHETHER SHOWN ON PLANS OR NOT.

41. CEILING CONTRACTOR SHALL SUBMIT COORDINATED REFLECTED CEILING PLANS FOR ALL AREAS. PLANS SHALL INDICATE CEILING TILE GRID. CEILING DIFFUSER, ELECTRICAL LIGHTING FIXTURES, SPRINKLERS, ETC. NO RELATED WORK SHALL PROCEED UNTIL SAID PLANS ARE APPROVED BY ARCHITECT.

42. THE FURNITURE SHOWN ON DRAWINGS IS FOR INFORMATION PURPOSES ONLY. THE PURCHASE AND INSTALLATION OF FURNITURE IS NOT PART OF THIS CONTRACT. THE GENERAL CONTRACTOR IS RESPONSIBLE FOR COORDINATION WITH THE OWNER'S FURNITURE INSTALLER FOR SCHEDULING PURPOSES.

C:\Users\marks\Documents\Revit\5146_Carteret_Pavilion_marksff9646.rvt
6/27/2023 2:54:13 PM

GENERAL NOTES | 5

01 GENERAL

- BUILDING AREA MATCH LINE
- CENTER LINE
- XX — COLUMN LINE/ GRID INDICATOR
- X — REVISION INDICATOR
- X — DOOR NUMBER
- XX — WINDOW TYPE NUMBER
- X / AX.X — INTERIOR ELEVATION
- X / AX.X — EXTERIOR ELEVATION
- X — PARTITION TYPE
- XXXX / XXXX / 000 / XXXX / XXXX / XXXX — SPACE NAME; ROOM NUMBER; AREA IN SQ. FT.; CEILING HEIGHT; OCCUPANCY
- ELEV. / XXXXX — FLOOR ELEV. SYMBOL
- X / AX.X — WALL SECTION NUMBER; REFERENCE DRAWING NUMBER
- X / AX.X — BUILDING SECTION NUMBER; REFERENCE DRAWING NUMBER
- AX.X / X — REFERENCE DRAWING NUMBER; EXTERIOR ELEVATION NUMBER
- DETAIL REFERENCE SYMBOL
- XXXXXXX — KEYNOTE SYMBOL
- EL. / XXX — SITE SPOT ELEVATION SYMBOL
- 1 / 4 AX.X 2 / 3 — INTERIOR ELEVATIONS

BUILDING WALL SYMBOLS

- CMU WALL
- STUD WALL
- BRICK WALL
- CONCRETE WALL
- PRECAST CONCRETE WALL

02 SITE CONSTRUCTION

- EARTH
- GRAVEL

03 CONCRETE

- CONCRETE
- GROUT

04 MASONRY

- BRICK/FACE BRICK
- CONCRETE MASONRY UNIT

05 METALS

- STEEL
- ALUMINUM
- OTHER METALS

06 WOOD AND PLASTICS

- CONTINUOUS BLOCKING
- INTERMITTENT BLOCKING
- PLYWOOD
- WOOD-FINISHED
- FIBERBOARD

07 THERMAL & MOISTURE PROTECTION

- COMPRESSIBLE FILLER
- INSULATION-RIGID
- INSULATION-BATT/BLANKET

08 DOORS & WINDOWS

- GLASS

09 FINISHES

- GYPSUM BOARD
- CERAMIC TILE
- ACOUSTIC TILE
- CARPET
- PLASTIC LAMINATE

PROJECT NORTH TRUE NORTH — NORTH ARROWS

MATERIALS LEGEND | 4

A	
A/C	Air Conditioning
AB	Anchor Bolt
ABV	Above
AC PNL	Acoustical Panel
ACT	Acoustical Tile
ACU	Air Conditioning Unit
AD	Area Drain
ADD	Addendum
ADDL	Additional
ADH	Adhesive
ADJ	Adjacent
ADJT	Adjustable
ADMIN	Administrative
AFF	Above Finish Floor
AGG	Aggregate
AHU	Air Handling Unit
AIB	Air Infiltration Barrier
AL or ALUM	Aluminum
ALLOW	Allowance
ALT	Alternate
ANC	Anchor, Anchorage
ANOD	Anodized
ACC PNL	Access Panel
APC	Architectural Precast Concrete
APPROX	Approximate
ARCH	Architect(ural)
ASPH	Asphalt
AUTO	Automatic
AVE	Avenue
AVG	Average
AWT	Acoustical Wall Treatment
B	
BAL	Balance
BC	Back of Curb
BD	Board
BITUM	Bituminous
BL	Building Line
BLDG	Building
BLK	Block
BLKG	Blocking
BLR	Boiler
BLW	Below
BM	Bench Mark
BO	By Others/Owner
BOC	Bottom of Curb
BOT	Bottom
BPL	Bearing Plate
BRG	Bearing
BRIDG	Bridging
BRK	Brick
BRKT	Bracket
BRZ	Bronze
BTWN	Between
BUR	Built-up Roofing
BVL	Bevel(ed)
C	
C	Channel
CAB	Cabinet
CANTL	Cantilever
CB	Catch Basin
CCTV	Closed Circuit Television
CEM	Cement
CF	Cubic Foot
CFM	Cubic Feet Per Minute
CG	Corner Guard
CHAM	Chamfer
CI	Cast Iron
CU IN	Cubic Inch
CIP	Cast Iron Pipe
CIP	CONC Cast-In-Place Concrete
CJT	Control Joint
CKT	Circuit
CL	Center Line
CLG	Ceiling
CLG HT	Ceiling Height
CLO	Closet
CLR	Clear or Clearance
CLRM	Classroom
CM	Construction Manager
CMP	Corrugated Metal Pipe
CMU	Conc. Masonry Unit
CND	Conduit
CO	Cleanout
COL	Column
CONC	Concrete
COND	Condenser or Condensate
CONF	Conference
CONN	Connect(ed)(ion)
CONSTR	Construction
CONT	Continuous

C (CONTINUATION)	
CONTR	Contractor
COORD	Coordinate
CORR	Corridor
CPT	Carpet(ed)
CRKT	Cricket
CRS	Course(s)
CSMT	Casement
CST	Child Study Team
CTR	Center
CUST	Custodian
CST	Cast Stone
CSWK	Casework
CT	Cooling Tower
CTR	Center
CUH	Cabinet Unit Heater
CW	Cold Water
CY	Cubic Yard
CYL	Cylinder
D	Depth
DBL	Double
DBL ACT	Double Acting
DEG	Degree
DEMO	Demolish, Demolition
DEPT	Department
DF	Drinking Fountain
DH	Double Hung
DIA	Diameter
DIAG	Diagonal
DIFF	Diffuser
DIM	Dimension
DIR	Direction, Director
DISP	Dispenser
DIST	Distribution
DIV	Division
DL	Dead Load
DN	Down
DO	Door Opening
DR	Door
DSGN	Design
DTL	Detail
DUP	Duplicate
DWG	Drawing
DWL(S)	Dowel(s)
DWR	Drawer
E	
E	East
EA	Each
EF	Exhaust Fan
EJT	Expansion Joint
EL or ELEV	Elevation
ELAS	Elastomeric
ELEC	Electrical
ELEV	Elevator
EMER	Emergency
ENCL	Enclosure
ENGR	Engineer
ENTR	Entrance
EQ	Equal
EQUIP	Equipment
ESC	Escalator
EST	Estimate
EW	Each Way
EWC	Electric Water Cooler
EXH	Exhaust
EXP	Expansion
EXT	Exterior
EXTRU	Extrusion
F	
FF&E	Furniture, Furnishings & Equip.
FF	Finished Floor Elevation
FH	Fire Hydrant/Hose
FHC	Fire Hose Cabinet
FIN	Finish
FIX	Fixture
FLASH	Flashing
FLR	Floor
FLUOR	Fluorescent
FOUNT	Fountain
FP	Fireproof
FRM	Frame
FT	Feet
FT	Foot, Feet
FTG	Footing
FUR	Furring
FUT	Future
G	
GA	Gage or Gauge
GALV	Galvanized
GB	Grab Bar
GC	General Contract(or)

G (CONTINUATION)	
GEN	Generator
GL	Glass
GR	Grade
GR BM	Grade Beam
GRND	Ground
GU	Gutter
GWB	Gypsum Wallboard
GYP	Gypsum
H	
H	High
H PT	High Point
HC	Hollow Core
HD	Head
HDR	Header
HDW	Hardware
HDWD	Hardwood
HM	Hollow Metal
HNDRL	Handrail
HORIZ	Horizontal
HP	Horsepower
HR	Hour
HT	Height
HTG	Heating
HVAC	Heating, Ventilating, Air Conditioning
HW	Hot Water
HWH	Hot Water Heater
HYD	Hydrant
I	
ID	Inside Diameter
IDF	Intermediate Distribution Frame
IF	Inside Face
IN	Inches
INCL	Include(d)(ing)
INFO	Information
INSTR	Instructor
INSUL	Insulation
INSUL PNL	Insulated Panel
INT	Interior
J	
J.C.	Janitor's Closet
JB	Junction Box
JST	Joist
JT	Joint
K	
KD	Knocked Down
KIT	Kitchen
KPL	Kick Plate
L	
L	Length
LAB	Laboratory
LAM	Laminated
LAV	Lavatory
LG	Large
LH	Left Hand
LIN	Linear
LL	Live Load
LOC	Locate, Location
LONG	Longitudinal
LP	Low Point
LT	Light
LTG	Lighting
LTL	Lintel
LVR	Louver
LWT	Lightweight
LWT CONC	Lightweight Concrete
M	
MACH	Machine
MAINT	Maintenance
MAN	Manual
MAS	Masonry
MATL	Material
MAU	Makeup Air Unit
MAX	Maximum
MBR	Member
MDF	Main Distribution Frame
MECH	Mechanical
MED	Medium
MEMB	Membrane
MFR	Manufacturer
MH	Manhole
MIN	Minimum
MIN	Minute
MIR	Mirror
MISC	Miscellaneous
MIX	Mixture
MLDG	Molding
MLWK	Millwork

M (CONTINUATION)	
MM	Millimeter
MO	Masonry Opening
MOD	Modular
MTD	Mounted
MTL	Metal
MTR	Mortar
MULL	Mullion
N	North
NA	Not Applicable
NAT	Natural
NE	Northeast
NIC	Not In Contract
NO	Number
NOM	Nominal
NORM	Normal
NRC	Noise Reduction Coefficient
NTS	Not to Scale
NW	Northwest
O	
OA	Overall
OB GL	Obscure Glass
OC	On Center
OD	Outside Diameter
OFF	Office
OH	Overhead
OPNG	Opening
OPP	Opposite
ORD	Overflow Roof Drain
ORIG	Original
OZ	Ounce
P	
PCF	Pounds per Cubic Foot
PE	Physical Education
PERF	Perforated
PI	Point of Intersection
PL	Plate
PL	Property Line
PLAM	Plastic Laminate
PLAS	Plaster
PLUMB	Plumbing
PNL	Panel
PR	Pair
PRELIM	Preliminary
PROJ	Projection
PSF	Pounds per Square Foot
PSI	Pounds per Square Inch
PT	Point, Point of Tangent
PTD	Painted
PTN	Partition
PVC	Polyvinyl Chloride
PVMT	Pavement
PWD	Plywood
PLYWD	Plywood
R or RAD	Radius
RA	Return Air
RCP	Reflected Ceiling Plan
RD	Roof drain
REF	Reference
REINFORCING BAR	Reinforcing Bar
REC	Recessed
RECP	Receptacle
RECT	Rectangular
REFR	Refrigerator
REG	Regular
REINF	Reinforc(ing)(ed)
REQD	Required
RET	Return
REV	Revision
RFG	Roofing
RH	Right hand
R.I.	Rigid Insulation
RM	Room
RND	Round
RO	Rough Opening
ROW	Right of Way
RTU	Roof Top Unit
RV	Roof Ven
S	
S	South
SAN	Sanitary
SCHED	Schedule
SE	Southeast
SECT	Section
SGI	Small Group Instruction
SHT	Sheet
SIM	Similar

S (CONTINUATION)	
SPEC	Specification
SQ	Square
SQ FT or SF	Square Foot
SRV	Services
STSTL	Stainless Steel
STAG	Staggered
STC	Sound Transmission Coefficient
STD	Standard
STL	Steel
STOR	Storage
STRUCT STL	Structural Steel
SUSP	Suspen(ded)(sion)
SW	Southwest
SWD	Solid Wood
SYS	System
T	
T & G	Tongue and Groove
TB	Towel Bar
TEL	Telephone
TEMP	Temperature
TEMP GL	Tempered Glass
TEX FIN	Textured Finish
THERM	Thermal
THK	Thick(ness)
TO	Top of
TOS	Top of Steel
TPD	Toilet Paper
TR	Transom
TRANS	Trasaction
TV	Television
TYP	Typical
U	
UL	Underwriters Laboratories
UNFIN	Unfinished
UR	Urinal
UTIL	Utility
U.O.N.	Unless Otherwise Noted
V	
V	Volt
VAL	Value
VAR	Varies/ Variation
VB	Vapor Barrier
VCT	Vinyl Composition Tile
VEN	Veneer
VENT	Ventilating
VERT	Vertical
VEST	Vestibule
VOL	Volume
VWC	Vinyl Wall Covering
W	
W	West
W/	With
W/O	Without
WC	Water closet
WD	Wood
WDW	Window
WF	Wide Flange
WG	Wired Glass
WH	Water Heater
WPT	Working Point
WSCT	Wainscot
WT	Weight
WWF	Welded Wire Fabric
YD	Yard

ARCHITECTURAL ABBREVIATIONS | 2

I. General

A. All cited sections and tables are from the International Building Code, 2021 New Jersey Edition unless otherwise noted.

II. Project Information

A. Project Name: Carteret Pier Pavilion
B. Owner: Borough of Carteret, New Jersey
C. Project Description: 2,800 sf Pavilion for the consumption of food and beverages, with accompanying scullery and storage spaces, built on top of the existing Carteret Fishing Pier in Carteret Waterfront Park.
D. Applicable Building Codes
   1. Uniform Construction Code (NJAC 5:23)
   2. Building Subcode (*NJAC 5:23-3.14*): International Building Code, 2021 NJ Ed.
   3. Plumbing Subcode (*NJAC 5:23-3.15*): National Standard Plumbing Code, 2021 NJ Ed.
   4. Electrical Subcode (*NJAC 5:23-3.16*): National Electrical Code (NFPA 70), 2020 Ed.
   5. Energy Subcode (*NJAC 5:23-3.18*): ASHRAE 90.1-2019
   6. Mechanical Subcode (*NJAC 5:23-3.21*): International Mechanical Code, 2021 Ed.
   7. Barrier Free Subcode (*Chapter 11 of IBC/2018 & NJAC 5:23-7*) ICC/ANSI A117.1-2017
   8. ASCE/SEI 24-2014 Flood Resistant Design and Construction as referenced by IBC 2021 NJ Ed.
E. Use Group: A-2 (Section 303.3)
F. Construction Classification: 'Type VB' (*Table 601*)
G. Sprinklered: Fully Sprinklered in accordance with *Section 903.3.1.1.*
H. Actual Build Height & Area
   1. Actual Building Area (Per Floor, measured as per *Section 202, Area, Building*):
      a. First Floor: **2,845 SF**
      b. Partial Attic (Equipment Spaces Only): **237 SF**
   2. Actual Building Height above the grade plane (measured as per *Section 202, Height, Building*): **1'9' - 1" / 1 Stories**
   3. Actual Building Lowest Level Elevation: **Top of existing pier decking: 8'-0"** (NAVD 88)
I. Flood Information (Per National Flood Insurance Program Flood Insurance Rate Map 340257 0079 G, dated January 30, 2015)
   1. Special Flood Hazard Area: **Zone AE, seaward of Limit of Moderate Wave Action line**
   2. Base Flood Elevation (BFE): **14'-0"** (NAVD 88)

III. Building Code Analysis

A. Allowable Building Height:
   1. Use Group A-2: Construction 'Type VB"; Sprinklered
   2. Allowable Building Height in feet above grade plane (*Table 504.3*): **60 feet - Complies**
   3. Allowable Number of Stories above grade plane (*Table 504.3*): **2 - Complies**
B. Allowable Building Area
   1. Unlimited Area Building (Section 507): **Not applicable to A-2/VB**
   2. Condition: **Single Occupancy, less than 3 stories**
   3. Means of Calculation: **Equation 5-1**
   4. i. Frontage Increase Factor:
      a. Minimum Width: Greater than 30'-0"
      b. Extent 221'-4" of 221'-4" of the building perimeter (100%)
      c. Area factor increase based on Table 506.3.3: **.75**
   5. A_t = Tabular Allowable Area per Table 506.2 (A-2-S1/VB): **24,000**
   6. NS = Tabular Non Sprinklered Allowable Area per Table 506.2 (A-2-S1/VB): **6,000**
   7. Allowable Area Total $A_a = A_t + (NS*I_f)$ = **28,500 SF – Complies**
C. Accessory Uses:
   1. Accessory Uses: None
D. Incidental Uses
   1. Separation and/or Protection (*Table 509*)
   2. Rooms with furnace equipment or boilers in excess of limits specified by *Table 509*: **1 Hour fire rating or provide automatic sprinkler system.**
   3. Electrical Installations and transformers: **Fire rating as per *NFPA 70***
   4. Waste or Linen Collection Rooms over 100 SF: **1 Hour fire rating or provide automatic sprinkler system.**
   5. Separation shall be by a fire barrier or horizontal assembly AND fire rating of construction supporting these fire barriers is **not required** in type **IIB** construction (*Section 509.4.1*)
   6. Where automatic sprinkler is provided in lieu of fire rated construction, separation capable of resisting the passage of smoke shall be provided (walls, floor/ceilings, doors, penetrations) (*Section 509.4.2*)
E. Fire rating requirements for building elements (*Table 601 & Table 602*)
   1. Construction Type: **Type VB**
   2. Primary Structural frame: **0 Hour**
   3. Bearing walls exterior: **0 Hour**
   4. Bearing walls interior: **0 Hour**
   5. Non-bearing walls & partitions, exterior: **0 Hours (no other buildings W/in 30'-0")**
   6. Non-bearing walls & partitions, interior: **no rating required**
   7. Floor construction & associated secondary members: **0 Hour**
   8. Roof construction & associated secondary members: **0 Hour**
F. Additional Fire Resistance Ratings
   1. Fire Barriers (*Section 707.3*):
   2. Incidental Uses: **see Table 509** (*Section 707.3.7*)
   3. Fire Pump Room: **1 Hour** (*NFPA 20 Table 4.14.1.1.2*)
G. Means of Egress
   1. Exit travel distance by occupancy (*Table 1017.2*): 250'-0"
   2. Capacity of egress components (*Section 1005.3*):
   3. Stairways: 0.2 inches per occupant
   4. Other egress components: 0.15 inches / occupant
   5. Minimum number of exits required per occupant load (*Table 1006.3.2*)
   6. First Floor: 4 Exits
   7. Attic: 1 Exit
   8. Common path of egress travel: 0'-0"
   9. Dead end corridor length: 0'-0"
H. Interior finishes
   1. Interior wall & ceiling finishes
      a. Classification under ASTM E84 or UL723 (*Section 803.1.2*)
         - Smoke developed index, all classes: 0-450
         - Flame spread index:
         - Class A: 0-25
         - Class B: 26-75
         - Class C: 76-200
      b. Classification under NFPA 286
         - NFPA 286 classification, provided product complies with *Section 803.1.1.1*
      c. Requ

EGRESS CALCULATIONS

OCCUPANCY CHART

SPACE	ROOM #	FUNCTION OF SPACE	AREA	OCCUPANT LOAD FACTOR	OCCUPANTS ALLOWED
DINING	101	A-UNCONCENTRATED	1,905 SF	1/15 SF NET	127
BAR	102	SCULLERY / BAR	210 SF	1/200 GROSS	2
UTILITY CLOSET	103	STOR/MECH/EQUIP	62 SF	1/300 GROSS	1
BAR STORAGE	104	STOR/MECH/EQUIP	108 SF	1/300 GROSS	1
TRASH ROOM	105	STOR/MECH/EQUIP	105 SF	1/300 GROSS	1
SCULLERY	106	SCULLERY / BAR	225 SF	1/200 GROSS	2
STORAGE	107	STOR/MECH/EQUIP	83 SF	1/300 GROSS	1
					135

[1] OCCUPANCY LOAD FACTORS AS PER IBC 2021 NJ ED TABLE 1004.5

TRAVEL DISTANCES

PATH TYPE	LABEL	ACTUAL DISTANCE	MAX ALLOW DIST[2]	COMMENTS
TRAVEL DISTANCE	A	51' - 4"	250' - 0"	COMPLIES
TRAVEL DISTANCE	B	57' - 1"	250' - 0"	COMPLIES
TRAVEL DISTANCE	C	45' - 4"	250' - 0"	COMPLIES
EXIT ACCESS DISTANCE	D	33' - 10"	75' - 0"	COMPLIES

[2] MAXIMUM ALLOWABLE TRAVEL DISTANCE AS PER IBC 2021 NJ ED TABLE 1017.2

EGRESS COMPONENTS

EXITS

DINING AREA EGRESS COMPONENT	CLEAR WIDTH	CAPACITY FACTOR	CAPACITY	EGRESS TO
DOOR 101	DOOR 33"	0.15	220	EXTERIOR
DOOR 101A	DOOR 33"	0.15	220	EXTERIOR
DOOR 101B	DOOR 33"	0.15	220	EXTERIOR

EXITS PROVIDED: **3** TOTAL EXIT CAPACITY: **660**
EXITS REQUIRED[1]: **2** TOTAL OCCUPANTS: **125** **COMPLIES**

UTILITY CLOSET EGRESS COMPONENT	CLEAR WIDTH	CAPACITY FACTOR	CAPACITY	EGRESS TO
DOOR 103	DOOR 33"	0.15	220	EXTERIOR

EXITS PROVIDED: **1** TOTAL EXIT CAPACITY: **220**
EXITS REQUIRED[2]: **1** TOTAL OCCUPANTS: **1** **COMPLIES**

SCULLERY AREA EGRESS COMPONENT	CLEAR WIDTH	CAPACITY FACTOR	CAPACITY	EGRESS TO
DOOR 106	DOOR 33"	0.15	220	EXTERIOR

EXITS PROVIDED: **1** TOTAL EXIT CAPACITY: **220**
EXITS REQUIRED[2]: **1** TOTAL OCCUPANTS: **4** **COMPLIES**

[1] PER NJIBC 2021 TABLE 1006.3.3
[2] PER NJIBC 2021 SECTION 1006.2.1

9

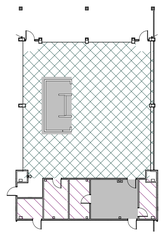

FUNCTION OF SPACE

- A-UNCONCENTRATED
- SCULLERY / BAR
- STOR/MECH/EQUIP

OCCUPANCY DIAGRAM 5

- ROOM NAME / X101 / 150 SF — ROOM NUMBER; ROOM AREA
- 99 — TOTAL NUMBER OF OCCUPANTS IN ROOM
- PATH OF TRAVEL LINE FOR TRAVEL DISTANCE CALCULATIONS
- X — PATH OF TRAVEL LABEL
- DOOR 107 — EGRESS COMPONENT
- 33 — CLEAR WIDTH OF EGRESS COMPONENT
- 0.15 — CAPACITY FACTOR (PER NJIBC SECTION 1005.3)
- 220 — CAPACITY OF EGRESS COMPONENT
- 131 — ACTUAL OCCUPANT LOAD SERVED BY EGRESS COMPONENT
- FEC — FIRE EXTINGUISHER CABINET
- WALL MOUNTED EXIT LIGHT
- CEILING MOUNTED EXIT LIGHT

EGRESS PLAN LEGEND 4

Key Plan

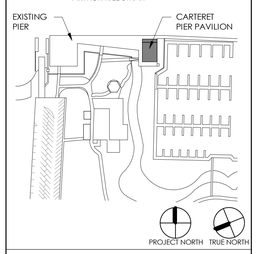

PROJECT

CARTERET PIER PAVILION

WATERFRONT PARK
200 MIDDLESEX AVENUE BLOCK 201 LOT 4
CARTERET, NEW JERSEY 07008

GEOTECHNICAL & STRUCTURAL ENGINEER

McLaren ENGINEERING GROUP
McLaren Technical Services, Inc.
530 Chestnut Ridge Road
Woodcliff Lake, New Jersey 07677
201.775.6000 | www.mgmclaren.com

MEP ENGINEER

KeRi ENGINEERING PC
911 SPRINGFIELD ROAD, SUITE 2
UNION, NEW JERSEY 07083
973.866.5374
INFO@KERIENGINEERING.COM

FOOD SERVICE DESIGN CONSULTANT

RAYMOND/RAYMOND ASSOCIATES
FOOD SERVICE CONSULTANTS SINCE 1938
44 ST. JOHN STREET
GOSHEN, NEW YORK
845.360.5112
INFO@RRADESIGNS.COM

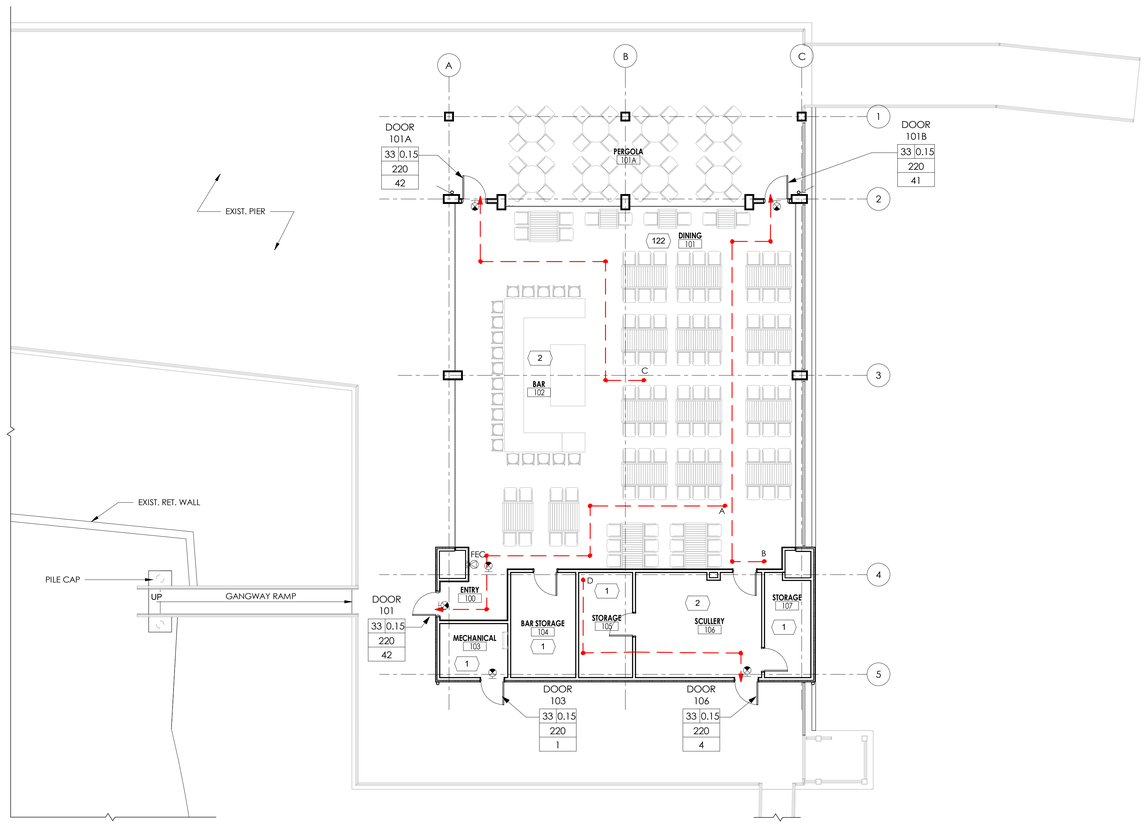

PAVILION EGRESS PLAN 1/8" = 1'-0" 1

DMR
ARCHITECTURE
PLANNING
ENGINEERING
INTERIORS
CONSULTING
www.dmrarchitects.com

MEMBERS OF THE AMERICAN INSTITUTE OF ARCHITECTS

LLOYD A. ROSENBERG	NJ - AI 05526
KURT A. VIERHEILIG	NJ - AI 17809
PRADEEP KAPOOR	NY - 042197
FERNANDO ROBLEDO	NY - 033804
JANET PINI	NJ - AI 02102900

NOT VALID FOR BIDDING UNLESS SIGNED AND SEALED BY ARCHITECT

777 Terrace Avenue, 6th Floor
Hasbrouck Heights, New Jersey 07604
Tel 201 - 288 - 2600 || Fax 201 - 288 - 2662

NCARB NATIONAL COUNCIL OF ARCHITECTURAL REGISTRATION BOARDS

CO - 306 184 CT - 05438 *NJ - AI 05526*
NJ-BOARD OF PROFESSIONAL PLANNERS) - LI 013584
NY - 013025-1 *PA - RA - 13437-B*

DWG

LIFE SAFETY & EGRESS PLAN

SCALE As indicated

DATE	DESCRIPTION	DRN	CHK
06/26/2023	BID SET	JC/MD	DG

REV.	DATE	DESCRIPTION

PROJECT NO. 5146
SHEET NO. EG1.1

Copyright © 2023 by DMR
PLOT DATE: 6/27/2023 2:54:09 PM

C:\Users\mdeck\Documents\Revit\5146_Carteret_Pavilion_mdeckR24.rvt
6/27/2023 2:54:09 PM

1. DEMOLITION IS INTENDED TO PREPARE THE EXISTING PIER TO RECEIVE THE NEW WORK. THE INFORMATION PROVIDED IN NO WAY INTENDS TO MEAN THAT DEMOLITION IS LIMITED ONLY TO THOSE ITEMS SPECIFICALLY IDENTIFIED. REMOVE ALL EXISTING ITEMS OF CONSTRUCTION AND EQUIPMENT WITHIN THE PROJECT AREA, AS INDICATED ON THE DEMOLITION DRAWINGS OF ALL TRADES, WHETHER SHOWN OR NOT, INCLUDING, BUT NOT LIMITED TO DECKING MATERIAL REMOVAL AND REINSTALLATION, RAILINGS, SITE FURNITURE, SITE LIGHTING AND ELECTRICAL AS REQUIRED TO ACCOMMODATE THE NEW CONSTRUCTION. ANY EXISTING CONSTRUCTION TO REMAIN, IF DAMAGED BY ANY TRADE, SHALL BE PATCHED, REPAIRED OR REPLACED TO MATCH EXISTING. DEMOLITION AND ALTERATION PROCEDURES SHALL COMPLY WITH APPLICABLE CODES AND REGULATIONS.
2. IT IS THE CONTRACTOR'S RESPONSIBILITY TO THOROUGHLY INSPECT THE WORK AREA IN ORDER TO VERIFY ACTUAL EXISTING CONDITIONS AND FULL SCOPE OF DEMOLITION WORK AND REMOVAL WORK REQUIRED TO ACCOMMODATE NEW CONSTRUCTION.
3. UNLESS OTHERWISE NOTED, ALL DEMOLISHED ITEMS ARE TO BE REMOVED IN THEIR ENTIRETY INCLUDING ALL ASSOCIATED PIPING, WIRING, HANGERS, SUPPORTS, PROJECTIONS, BOLTS, NAILS, ETC. FROM EXISTING SURFACES. PATCH ALL HOLES TO MATCH ADJACENT SURFACES OR PROVIDE NEW FINISHES PER FINISH PLAN.
4. ALL STRUCTURAL INTERFERENCE OR STRUCTURAL WALLS, BEAMS, JOIST, COLUMNS, PILES ETC. SHALL BE IMMEDIATELY BROUGHT TO THE ATTENTION OF ARCHITECT FOR DECISION. NO FLOOR OR STRUCTURAL MEMBERS SHALL BE CUT WITHOUT PERMISSION OF A REGISTERED STRUCTURAL ENGINEER HIRED BY THE CONTRACTOR, UNLESS SPECIFICALLY INDICATED FOR REMOVAL ON THE STRUCTURAL DRAWINGS.
5. PRIOR TO REMOVALS THE CONTRACTOR IS TO IDENTIFY ALL BUILDING SYSTEMS MATERIALS, INCLUDING PIPES, WIRING, CONDUIT, ETC. QUESTIONS REGARDING IDENTIFICATION SHALL BE ADDRESSED TO THE ARCHITECT.
6. PROVIDE PROTECTION FOR EXISTING AREAS TO REMAIN.
7. UPON COMPLETION OF THE DEMOLITION WORK, THE CONTRACTOR SHALL ENSURE THAT ALL AREAS BE LEFT BROOM CLEAN.
8. THE CONTRACTOR SHALL FURNISH A SYSTEM OF TEMPORARY LIGHTS THROUGHOUT THE SPACE UNDER DEMOLITION.
9. THE CONTRACTOR SHALL INSPECT ALL EXISTING SURFACES TO REMAIN PRIOR TO DEMOLITION AND PROVIDE REASONABLE AND ADEQUATE PROTECTION FROM DEMOLITION WORK.
10. REMOVE DEMOLISHED ITEMS AS SHOWN AS DEMOLITION PLANS. CONTRACTOR TO VERIFY EXISTING CONDITIONS OF THE PIER IN THE FIELD PRIOR TO BIDDING.
11. TEMPORARILY REMOVE PORTIONS OF EXISTING PIER DECKING TO ACCOMMODATE INSTALLATION OF PROPOSED PIER PAVILION CIVIL, ARCHITECTURAL, STRUCTURAL & MEPFP SCOPE OF WORK AND SALVAGE PIER DECKING TO BE REINSTALLED.
12. REFER TO MEP DRAWINGS FOR EXISTING MECHANICAL, ELECTRICAL, & PLUMBING DEMOLITION SCOPE OF WORK AS WELL AS EXISTING PIPING, CONDUITS, ETC. TO REMAIN WITHIN AREAS OF DEMOLITION.
13. REFER TO STRUCTURAL DRAWINGS FOR EXISTING PIER FRAMING DEMOLITION SCOPE OF WORK AS WELL AS EXISTING FRAMING, ETC. TO REMAIN WITHIN AREAS OF DEMOLITION.

GENERAL DEMOLITON NOTES 7

1. THE CUTTING AND PATCHING NOTES SHALL APPLY TO ALL EXISTING TO REMAIN ITEMS FOR THE DURATION OF CONSTRUCTION ACTIVITIES.
2. PATCH AND REPAIR EXISTING TO REMAIN PIER DECKING AS REQUIRED TO PROVIDE A SMOOTH LEVEL SURFACE FOR NEW WORK, UNLESS OTHERWISE NOTED.
3. REPLACE SECTIONS OF EXISTING DECKING WITH HOLES AND GOUGES IN EXISTING TO REMAIN PIER DECKING TO BE EXPOSED AT THE END OF THE WORK TO MATCH SURROUNDING EXISTING DECKING TO REMAIN, SO AS TO LEAVE NO EVIDENCE OF PATCHING OR REPAIR.
4. EXISTING CONSTRUCTION TO REMAIN DAMAGED BY ANY OTHER CONSTRUCTION OR DEMOLITION ACTIVITY SHALL BE REPARIED OR REPLACED TO MATCH AND ALIGN WITH ADJCENT CONSTRUCTION.
5. AFTER DEMOLITION OF EXISTING MEP WORK, EQUIPMENT AND FURNITURE, PATCH AND REPAIR EXISTING PIER DECKING TO MATCH EXISTING CONSTRUCTION.
6. ALL CONSTRUCTION TO REMAIN WHICH IS AFFECTED BY DEMOLITION SHALL BE PATCHED AND BE PROPERLY REPAIRED AND ALIGNED SO AS TO LEAVE NO EVIDENCE OF PATCHING OR REPAIR.

CUTTING & PATCH NOTES 4

D1 — EXISTING PIER BENCH TO BE REMOVED AND RELOCATED. PIER DECKING BEING PENETRATED BY BENCH ANCHORS TO BE REPLACED.

D2 — EXISTING PIER BENCH TO BE REMOVED, SALVAGED AND TURNED OVER TO MUNICIPALITY. PIER DECKING BEING PENETRATED BY BENCH ANCHORS TO BE REPLACED.

D3 — EXISTING PIER LIGHT POLE TO BE REMOVED, SALVAGED AND TURNED OVER TO MUNICIPALITY. PATCH AND REPAIR PIER DECKING AT LIGHT POLE REMOVAL LOCATION. REFER TO CIVIL AND ELECTRICAL DRAWINGS FOR ADDITIONAL DEMOLITION SCOPE WORK.

D4 — REMOVE PORTION OF EXISTING PIER GUARDRAIL.

D5 — REMOVE PORTION OF PIER GUARDRAIL AND SALVAGE FOR MODIFICATION & REINSTALLATION. REFER TO ARCHITECTURAL DRAWINGS FOR LOCATIONS AND DETAILS.

D6 — EXISTING PIER BENCH TO REMAIN.

DEMOLITION KEY NOTES 3

EXISTING PIER CONSTRUCTION TO REMAIN

EXISTING PIER CONSTRUCTION TO BE REMOVED

1 — KEY NOTE TAG

DEMOLITION LEGEND 2

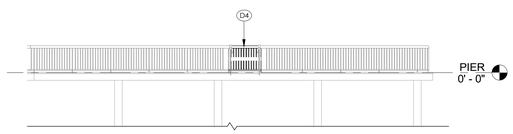

PIER DEMOLITION ELEVATION - WEST 1/8" = 1'-0" 6

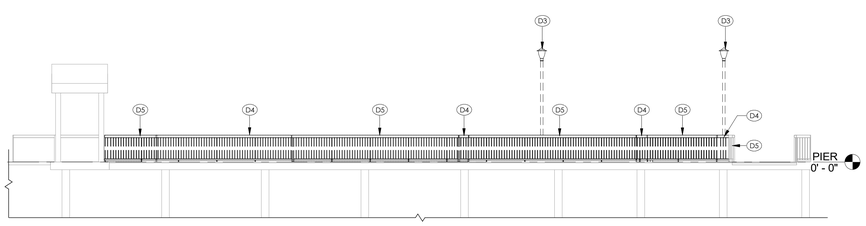

PIER DEMOLITION ELEVATION - EAST 1/8" = 1'-0" 5

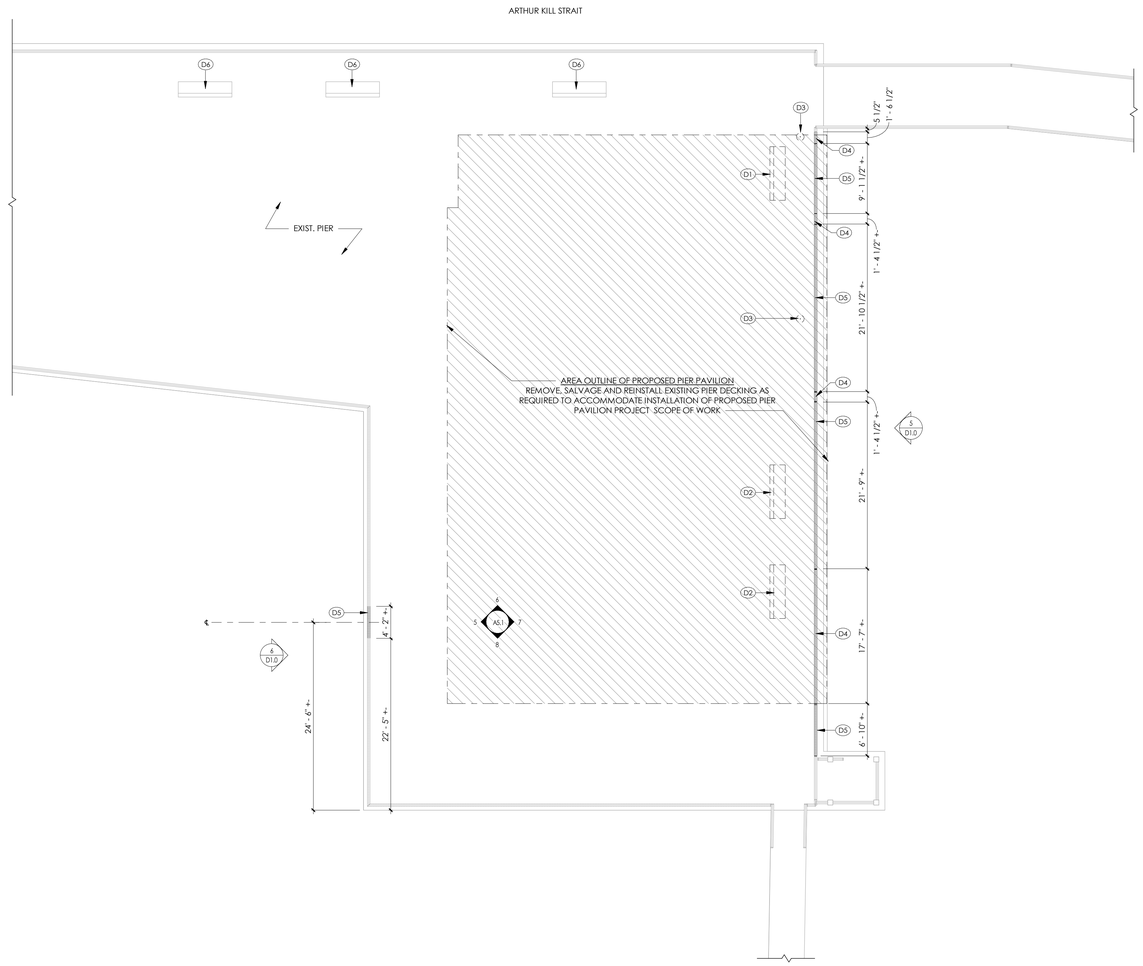

PIER DEMOLITION PLAN 1/8" = 1'-0" 1

C:\Users\mariot\Documents\Revit\5146_Carteret_Pavilion_mariotR24.rvt
6/27/2023 2:54:06 PM

Key Plan

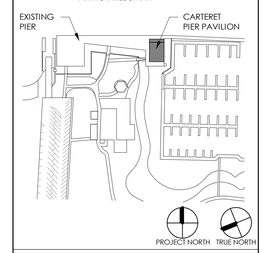

PROJECT

CARTERET PIER PAVILION

WATERFRONT PARK
200 MIDDLESEX AVENUE BLOCK 201 LOT 4
CARTERET, NEW JERSEY 07008

GEOTECHNICAL & STRUCTURAL ENGINEER

McLaren ENGINEERING GROUP

McLaren Technical Services, Inc.
530 Chestnut Ridge Road
Woodcliff Lake, New Jersey 07677
201.775.6000 | www.mgmclaren.com

MEP ENGINEER

KeRi ENGINEERING PC

911 SPRINGFIELD ROAD, SUITE 2
UNION, NEW JERSEY 07083
973.866.5374
INFO@KERIENGINEERING.COM

FOOD SERVICE DESIGN CONSULTANT

RAYMOND/RAYMOND ASSOCIATES
FOOD SERVICE CONSULTANTS SINCE 1938

44 ST. JOHN STREET
GOSHEN, NEW YORK
845.360.5112
INFO@RRADESIGNS.COM

DMR
ARCHITECTURE
PLANNING
ENGINEERING
INTERIORS
CONSULTING
www.dmrarchitects.com

MEMBERS OF THE AMERICAN INSTITUTE OF ARCHITECTS

LLOYD A. ROSENBERG	NJ - AI 05526
KURT A. VIERHEILIG	NJ - AI 17809
PRADEEP KAPOOR	NY - 042197
FERNANDO ROBLEDO	NY - 033804
JANET PINI	NJ - AI 02102900

NOT VALID FOR BIDDING UNLESS SIGNED AND SEALED BY ARCHITECT

777 Terrace Avenue, 6th Floor
Hasbrouck Heights, New Jersey 07604
Tel 201 - 288 - 2600 || Fax 201 - 288 - 2642

NCARB — NATIONAL COUNCIL OF ARCHITECTURAL REGISTRATION BOARDS

CO - 306 184 CT - 05438 NJ - AI 05526
NJ-BOARD OF PROFESSIONAL PLANNERS - LI 01584
NY - 013025-1 PA - RA - 13437-B

DWG

PIER DEMOLITION PLAN

SCALE: As indicated

DATE	DESCRIPTION	DRN	CHK
06/26/2023	BID SET	JC/MD	DG

REV.	DATE	DESCRIPTION		

PROJECT NO.	SHEET NO.
5146	D1.0

Copyright © 2023 by DMR PLOT DATE: 6/27/2023 2:54:06 PM

1. SEE CUTTING AND PATCHING NOTES FOR EXISTING TO REMAIN ITEMS IMPACTED/UNCOVERED BY NEW CONSTRUCTION.
2. ARCHITECTURAL DATUM ELEVATION **0'-0"** = TOP OF EXISTING TO REMAIN PIER DECKING, **8'-0"+/-** (NAVD 88).
3. UNLESS OTHERWISE NOTED, VERTICAL DATUMS ARE GIVEN TO THE NOMINAL TOP OF FINISHED PIER DECKING, TOP OF ROOF DECK OR TOP OF PERIMETER BLOCKING.
4. UNLESS OTHERWISE NOTED, EXTERIOR DIMENSIONS ARE TO OUTSIDE FACE OF SHEATHING BOARD AS APPLICABLE. SEE ALSO WALL SECTIONS.
5. UNLESS OTHERWISE NOTED, INTERIOR DIMENSIONS ARE TO FINISH FACE OF WALLS AND PARTITIONS.
6. ALL PARTITION THICKNESSES ON FLOOR PLANS ARE NOMINAL, UNLESS OTHERWISE NOTED. SEE PARTITION TYPE FOR ACTUAL DIMENSIONS.
7. DIMENSIONS SHOWN FROM EDGE OF DOOR OPENINGS ARE FROM THE INSIDE EDGE OF THE FRAME UNLESS OTHERWISE NOTED.
8. ALL NEW DOOR OPENINGS SHALL CONFORM TO THE ACCESSIBILITY REQUIREMENTS OF AUTHORITY HAVING JURISDICTION.
9. ALL DOOR OPENINGS SHALL BE LOCATED WITH A MINIMUM MANEUVERING CLEARANCE OF 18" ON PULL SIDE AND 12" ON PUSH SIDE WHEN BOTH A LATCH AND CLOSER ARE PROVIDED - UNLESS OTHERWISE NOTED (APPLICABLE TO LATCH SIDE ONLY)
10. GENERAL CONTRACTOR TO COORDINATE WITH THE DRAWINGS OF ALL TRADES AS WELL AS THE OWNER'S VENDORS FOR SECURITY, IT, TELECOM, FURNITURE, EQUIPMENT, ETC. AND PROVIDE BLOCKING AT ALL LOCATIONS AS REQUIRED. SEE ALSO FRAMING NOTES.
11. ALL WOOD SHEATHING SHALL BE 1/2" MARINE GRADE PLYWOOD, UNLESS OTHERWISE NOTED.
12. ALL WOOD FRAMING AND BLOCKING SHALL BE PRESSURE TREATED, UNLESS OTHERWISE NOTED.
13. ALL METAL FASTENERS SHALL BE OF 316 STAINLESS STEEL, UNLESS FASTENING ALUMINUM ELEMENTS OR UNLESS OTHERWISE NOTED, WHERE 316 STAINLESS STEEL FASTENERS ABUT BUT DO NOT FASTEN ALUMNINUM ELEMENTS, PROVIDE SEPERATION TAPE TO PREVENT CONTACT BETWEEN THE TWO METALS. ALUMINUM ELEMENTS SHALL BE FASTENED AS PER ELEMENT MFR'S RECOMMENDATIONS FOR MARINE ENVIROMENTS.
14. ALL EXPOSED MOISTURE RESISTANT GYPSUM BOARD ASSEMBLIES SHALL HAVE LEVEL 4 FINISH, PER ASTM C840, UNLESS OTHERWISE NOTED.
15. ALL GYPSUM BOARD CORNERS, VERTICAL AND HORIZONTAL, TO RECEIVE METAL CORNER BEAD, UNLESS OTHERWISE NOTED.
16. THE GENERAL CONTRACTOR SHALL THOROUGHLY CLEAN ALL SURFACES, INCLUDING WINDOWS AND FRAMES, WITH APPROVED CLEANING AGENT TO REMOVE ALL DIRT AND DEBRIS PRIOR TO COMPLETION OF WORK.
17. COORDINATE LOCATIONS OF CONDUITS, NUMBER OF SLEEVES, AND ANY FIRE RATED MARINE GRADE PLYWOOD (PAINTED BLACK) THAT IS NECESSARY FOR EQUIPMENT WITH OWNER'S IT VENDOR.
18. ALL RECEPTACLE, LIGHT SWITCHES AND COVER PLATES SHALL BE WATERPROOF EXTERIOR GRADE CORROSION RESISTANT WITH GROUND IN THE TOP POSITION. COLOR TO BE STAINLESS STEEL.
19. THE GENERAL CONTRACTOR SHALL REVIEW ARCHITECTURAL AND ELECTRICAL DRAWINGS FOR COORDINATION OF ALL LIGHTING & EQUIPMENT REQUIREMENTS. ANY INFORMATION SHOWN ONLY IN ONE LOCATION SHALL BE INTERPRETED AS BEING REQUIRED FOR BOTH.
20. REFERENCE ELEVATIONS FOR ORIENTATION OF WALL DEVICES (HORIZONTAL OR VERTICAL). IF NO ELEVATION IS PROVIDED, WALL DEVICES SHALL BE VERTICAL.
21. REFER TO TYPICAL MOUNTING HEIGHTS DRAWING, UNLESS OTHERWISE NOTED.

CONSTRUCTION NOTES 5

D# — DOOR AND FRAME

WALL CONSTRUCTION

STORAGE — ROOM NAME
XXX — ROOM NUMBER

FV — SMART VENT 1540-510 FLOOD VENT. BOTTOM OF FLOOD VENT TO BE INSTALLED 6" ABOVE FINISHED PIER DECKING.

MILLWORK BY CONTRACTOR

FEC — FIRE EXTINGUISHER CABINET REFER TO EGRESS PLAN

GFI — DUPLEX GROUND FAULT RECEPTACLE 18" AFF. TO CENTERLINE U.O.N. REFER TO ELECTRICAL DWGS.

DATA OUTLET 18" AFF. TO CENTERLINE U.O.N. REFER TO ELECTRICAL DWGS.

CONSTRUCTION PLAN LEGEND 4

C1 — OVERHEAD ROLL-UP SHUTTER W/ CLEAR POLYCARBONATE WINDOW INSERTS. REFER TO DOOR TYPES AND SCHEDULE SHEET AND SPECIFICATIONS FOR MORE INFORMATION.

C2 — 316 STAINLESS STEEL LADDER ACCESS FOR ATTIC FLOOR UTILITY SPACES.

C3 — REINSTALL PORTION OF SALVAGED PIER GUARDRAIL WITHIN ROLL-UP SHUTTER OPENING. REFER TO GUARDRAIL DETAILS.

C4 — EXISTING RELOCATED GANGWAY RAMP. GUARDRAIL & RAILING TO BE MODIFIED TO ACHIEVE LEGATH OF SPAN FROM EXISTING PIER TO PILE CAP ON LAND. MODIFY TO PROVIDE WIRE MESH INFILL PANELS WELDED TO EXISTING POSTS & GUARDRAILS. PROVIDE HADNRAIL EXTENSIONS & CAPS.

C6 — 4" DIA. STORMWATER DOWNSPOUT TO MATCH EXTERIOR STANDING SEAM METAL PANEL COLOR & FINISH. PROVIDE COMMERCIAL GRADE HDPE BOOT THROUGH PIER DECKING/FRAMING. REFER TO PLUMBING DRAWINGS FOR MORE INFORMATION.

C7 — PROVIDE PRESSURE TREATED LUMBER MECHANICALLY FASTENED TO SIDE OF PIER TO ALIGN WITH OUTSIDE EDGE OF PAVILION WALL. REFER TO STRUCTURAL DRAWINGS.

C8 — LOCATION OF RELOCATED PIER BENCH TO BE ALIGNED WITH ADJACENT BENCHES.

CONSTRUCTION KEY NOTES 3

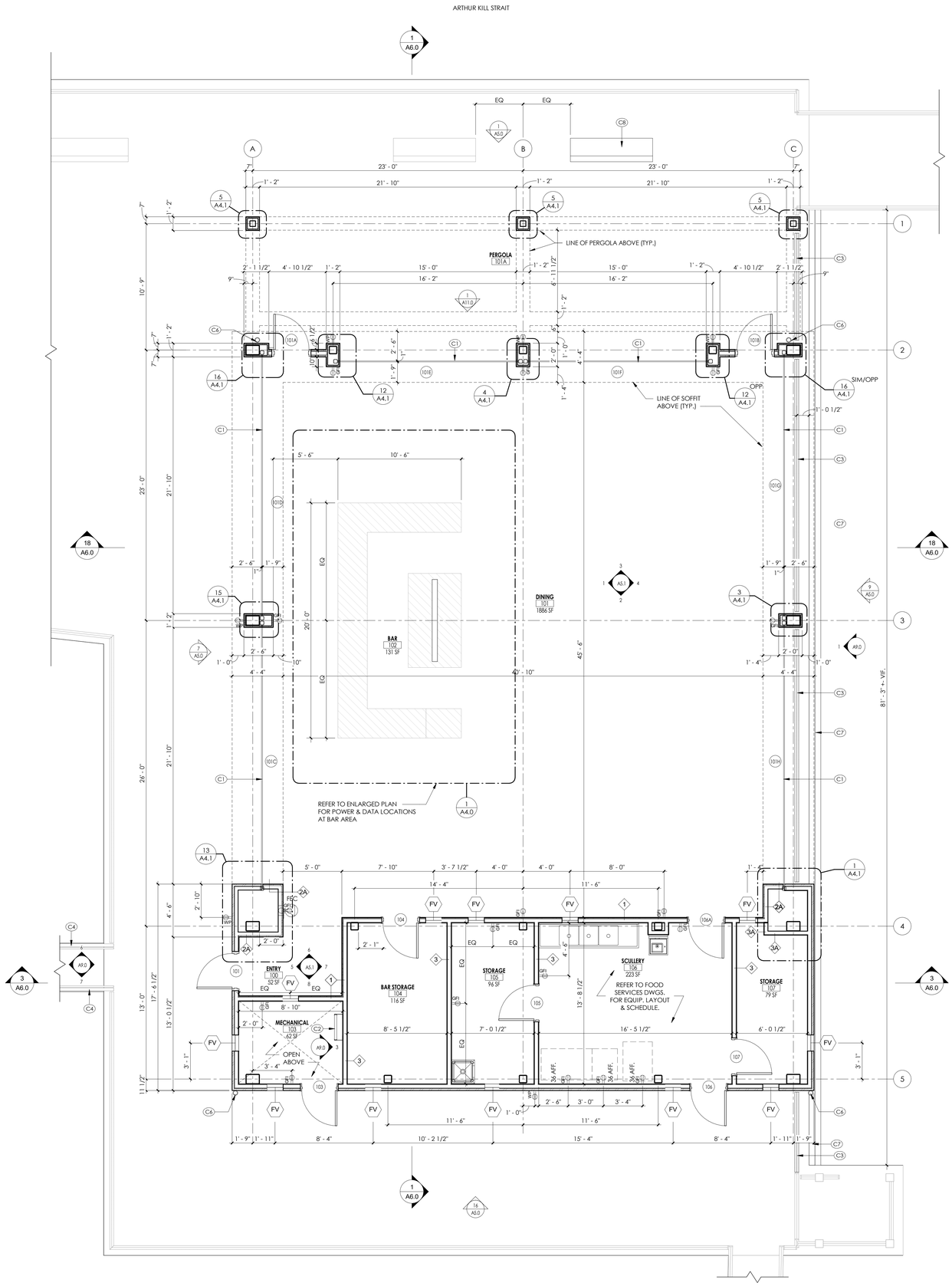

PAVILION CONSTRUCTION / POWER PLAN

1/4" = 1'-0" 1

Key Plan

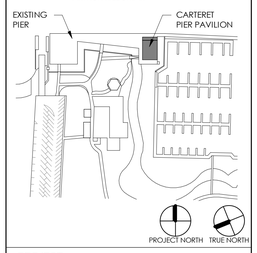

PROJECT
CARTERET PIER PAVILION

WATERFRONT PARK
200 MIDDLESEX AVENUE BLOCK 201 LOT 4
CARTERET, NEW JERSEY 07008

GEOTECHNICAL & STRUCTURAL ENGINEER
McLaren ENGINEERING GROUP
McLaren Technical Services, Inc.
530 Chestnut Ridge Road
Woodcliff Lake, New Jersey 07677
201.775.6000 | www.mgmclaren.com

MEP ENGINEER
KeRi ENGINEERING PC
911 SPRINGFIELD ROAD, SUITE 2
UNION, NEW JERSEY 07083
973.866.5374
INFO@KERIENGINEERING.COM

FOOD SERVICE DESIGN CONSULTANT
RAYMOND/RAYMOND ASSOCIATES
FOOD SERVICE CONSULTANTS SINCE 1938
44 ST. JOHN STREET
GOSHEN, NEW YORK
845.360.5112
INFO@RRADESIGNS.COM

DMR
ARCHITECTURE
PLANNING
ENGINEERING
INTERIORS
CONSULTING
www.dmrarchitects.com

MEMBERS OF THE AMERICAN INSTITUTE OF ARCHITECTS

LLOYD A. ROSENBERG	NJ - AI 05526
KURT A. VIERHEILIG	NJ - AI 17809
PRADEEP KAPOOR	NY - 042197
FERNANDO ROBLEDO	NY - 033804
JANET PINI	NJ - AI 02102900

NOT VALID FOR BUILDING UNLESS SIGNED AND SEALED BY ARCHITECT

777 Terrace Avenue, 6th Floor
Hasbrouck Heights, New Jersey 07604
Tel 201 - 288 - 2600 || Fax 201 - 288 - 2642

NCARB — NATIONAL COUNCIL OF ARCHITECTURAL REGISTRATION BOARDS

CO - 306 184 CT - 05438 NJ - AI 05526
NJ-BOARD OF PROFESSIONAL PLANNERS) - LI 01584
NY - 013023-1 PA - RA - 13437-B

DWG.
PAVILION CONSTRUCTION / POWER PLAN

SCALE: As indicated

DATE	DESCRIPTION	DRN	CHK
06/26/2023	BID SET	JC/MD	DG

REV.	DATE	DESCRIPTION

PROJECT NO.	SHEET NO.
5146	A1.0

Copyright © 2023 by DMR PLOT DATE: 6/27/2023 2:53:27 PM

C:\Users\mardi\Documents\Revit\5146_Carteret_Pavilion_mardiPK6R6.rvt
6/27/2023 2:53:27 PM

1. SEE CUTTING AND PATCHING NOTES FOR EXISTING TO REMAIN ITEMS IMPACTED/UNCOVERED BY NEW CONSTRUCTION.
2. ARCHITECTURAL DATUM ELEVATION **0'-0"** = TOP OF EXISTING TO REMAIN PIER DECKING, **8'-0"+/-** (NAVD 88).
3. UNLESS OTHERWISE NOTED, VERTICAL DATUMS ARE GIVEN TO THE NOMINAL TOP OF FINISHED PIER DECKING, TOP OF ROOF DECK OR TOP OF PERIMETER BLOCKING.
4. UNLESS OTHERWISE NOTED, EXTERIOR DIMENSIONS ARE TO OUTSIDE FACE OF SHEATHING BOARD AS APPLICABLE. SEE ALSO WALL SECTIONS.
5. UNLESS OTHERWISE NOTED, INTERIOR DIMENSIONS ARE TO FINISH FACE OF WALLS AND PARTITIONS.
6. ALL PARTITION THICKNESSES ON FLOOR PLANS ARE NOMINAL, UNLESS OTHERWISE NOTED. SEE PARTITION TYPE FOR ACTUAL DIMENSIONS.
7. DIMENSIONS SHOWN FROM EDGE OF DOOR OPENINGS ARE FROM THE INSIDE EDGE OF THE FRAME UNLESS OTHERWISE NOTED.
8. ALL NEW DOOR OPENINGS SHALL CONFORM TO THE ACCESSIBILITY REQUIREMENTS OF AUTHORITY HAVING JURISDICTION.
9. ALL DOOR OPENINGS SHALL BE LOCATED WITH A MINIMUM MANEUVERING CLEARANCE OF 18" ON PULL SIDE AND 12" ON PUSH SIDE WHEN BOTH A LATCH AND CLOSER ARE PROVIDED - UNLESS OTHERWISE NOTED (APPLICABLE TO LATCH SIDE ONLY)
10. GENERAL CONTRACTOR TO COORDINATE WITH THE DRAWINGS OF ALL TRADES AS WELL AS THE OWNER'S VENDORS FOR SECURITY, IT, TELECOM, FURNITURE, EQUIPMENT, ETC. AND PROVIDE BLOCKING AT ALL LOCATIONS AS REQUIRED. SEE ALSO FRAMING NOTES.
11. ALL WOOD SHEATHING SHALL BE 1/2" MARINE GRADE PLYWOOD, UNLESS OTHERWISE NOTED.
12. ALL WOOD FRAMING AND BLOCKING SHALL BE PRESSURE TREATED, UNLESS OTHERWISE NOTED.
13. ALL METAL FASTENERS SHALL BE OF 316 STAINLESS STEEL, UNLESS FASTENING ALUMINUM ELEMENTS OR UNLESS OTHERWISE NOTED. WHERE 316 STAINLESS STEEL FASTENERS ABUT BUT DO NOT FASTEN ALUMNINUM ELEMENTS, PROVIDE SEPERATION TAPE TO PREVENT CONTACT BETWEEN THE TWO METALS. ALUMINUM ELEMENTS SHALL BE FASTENED AS PER ELEMENT MFR'S RECOMMENDATIONS FOR MARINE ENVIROMENTS.
14. ALL EXPOSED MOISTURE RESISTANT GYPSUM BOARD ASSEMBLIES SHALL HAVE LEVEL 4 FINISH, PER ASTM C840, UNLESS OTHERWISE NOTED.
15. ALL GYPSUM BOARD CORNERS, VERTICAL AND HORIZONTAL, TO RECEIVE METAL CORNER BEAD, UNLESS OTHERWISE NOTED.
16. THE GENERAL CONTRACTOR SHALL THOROUGHLY CLEAN ALL SURFACES, INCLUDING WINDOWS AND FRAMES, WITH APPROVED CLEANING AGENT TO REMOVE ALL DIRT AND DEBRIS PRIOR TO COMPLETION OF WORK.
17. COORDINATE LOCATIONS OF CONDUITS, NUMBER OF SLEEVES, AND ANY FIRE RATED MARINE GRADE PLYWOOD (PAINTED BLACK) THAT IS NECESSARY FOR EQUIPMENT WITH OWNER'S IT VENDOR.
18. ALL RECEPTACLE, LIGHT SWITCHES AND COVER PLATES SHALL BE WATERPROOF EXTERIOR GRADE CORROSION RESISTANT WITH GROUND IN THE TOP POSITION. COLOR TO BE STAINLESS STEEL.
19. THE GENERAL CONTRACTOR SHALL REVIEW ARCHITECTURAL AND ELECTRICAL DRAWINGS FOR COORDINATION OF ALL LIGHTING & EQUIPMENT REQUIREMENTS. ANY INFORMATION SHOWN ONLY IN ONE LOCATION SHALL BE INTERPRETED AS BEING REQUIRED FOR BOTH.
20. REFERENCE ELEVATIONS FOR ORIENTATION OF WALL DEVICES (HORIZONTAL OR VERTICAL). IF NO ELEVATION IS PROVIDED, WALL DEVICES SHALL BE VERTICAL.
21. REFER TO TYPICAL MOUNTING HEIGHTS DRAWING, UNLESS OTHERWISE NOTED.

CONSTRUCTION NOTES 5

D# — DOOR AND FRAME

WALL CONSTRUCTION

STORAGE — ROOM NAME
XXX — ROOM NUMBER

FV — SMART VENT 1540-510 FLOOD VENT. BOTTOM OF FLOOD VENT TO BE INSTALLED 6" ABOVE FINSIHED PIER DECKING.

MILLWORK BY CONTRACTOR

FEC — FIRE EXTINGUISHER CABINET REFER TO EGRESS PLAN

GFI — DUPLEX GROUND FAULT RECEPTACLE 18" AFF. TO CENTERLINE U.O.N. REFER TO ELECTRICAL DWGS.

DATA OUTLET 18" AFF. TO CENTERLINE U.O.N. REFER TO ELECTRICAL DWGS.

CONSTRUCTION PLAN LEGEND 4

C2 — 316 STAINLESS STEEL LADDER ACCESS FOR ATTIC FLOOR UTILITY SPACES.

C5 — 316 STAINLESS STEEL GUARDRAIL 3'-6" HIGH AT ATTIC FLOOR UTILITY ACCESS. REFER TO GUARDRAIL DETAILS.

C9 — PROVIDE R13 3-1/2" BATT STONE WOOL INSULATION WITHIN WALL CAVITY AT MECHANICAL LOFT AND SPRINKLER ROOM UP TO UNDERSIDE OF ROOF DECK.

CONSTRUCTION KEY NOTES 3

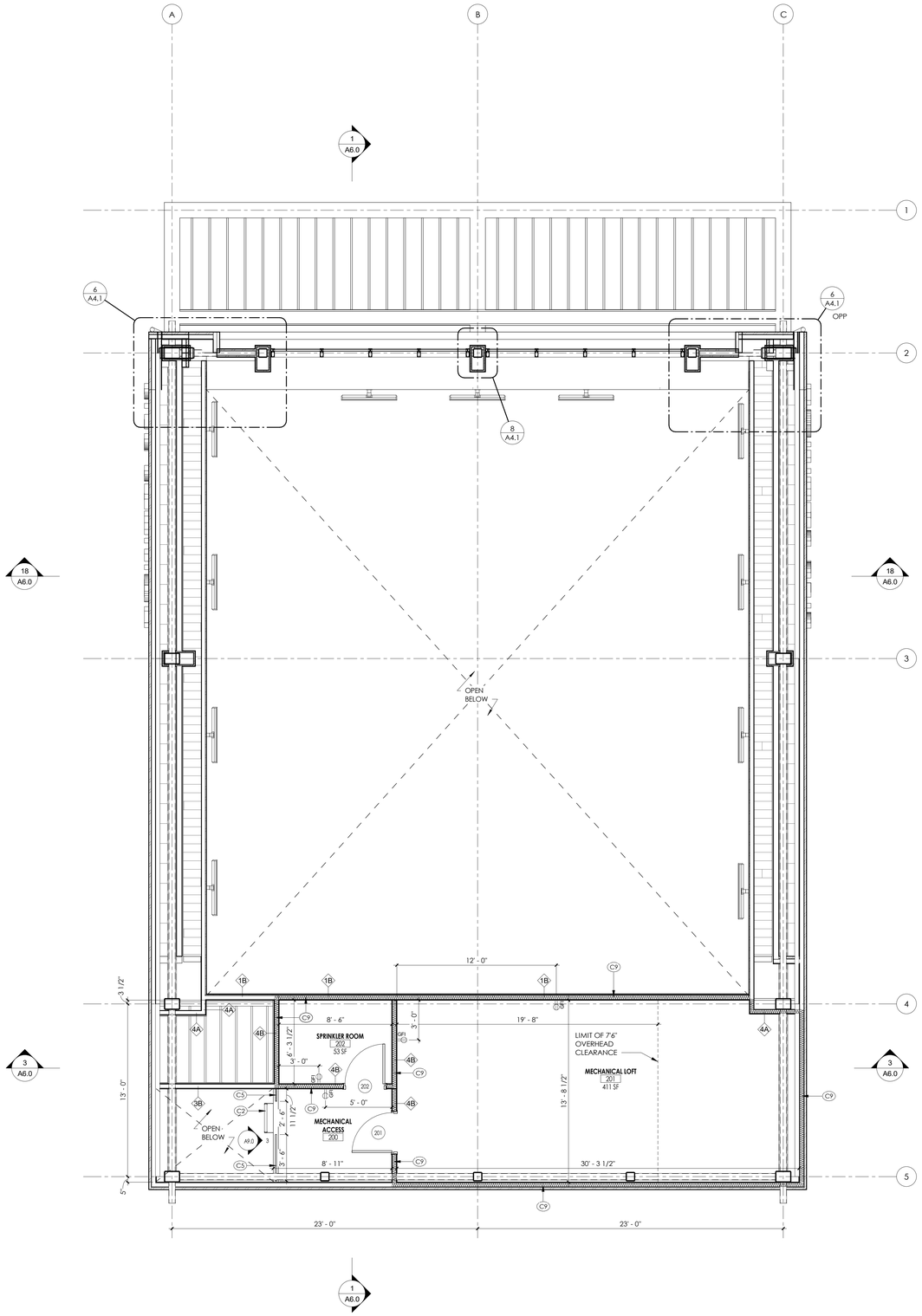

MECHANICAL LOFT CONSTRUCTION / POWER PLAN 1

1/4" = 1'-0"

C:\Users\mark\Documents\Revit\5146_Carteret_Pavilion_mark2R24.rvt
6/27/2023 2:53:29 PM

Key Plan

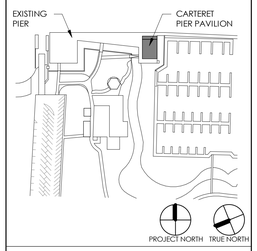

PROJECT

CARTERET PIER PAVILION

WATERFRONT PARK
200 MIDDLESEX AVENUE BLOCK 201 LOT 4
CARTERET, NEW JERSEY 07008

GEOTECHNICAL & STRUCTURAL ENGINEER

McLaren ENGINEERING GROUP
McLaren Technical Services, Inc.
530 Chestnut Ridge Road
Woodcliff Lake, New Jersey 07677
201.775.6000 | www.mgmclaren.com

MEP ENGINEER

KeRi ENGINEERING PC
911 SPRINGFIELD ROAD, SUITE 2
UNION, NEW JERSEY 07083
973.866.5374
INFO@KERIENGINEERING.COM

FOOD SERVICE DESIGN CONSULTANT

RAYMOND/RAYMOND ASSOCIATES
FOOD SERVICE CONSULTANTS SINCE 1938
44 ST. JOHN STREET
GOSHEN, NEW YORK
845.360.5112
INFO@RRADESIGNS.COM

DMR
ARCHITECTURE
PLANNING
ENGINEERING
INTERIORS
CONSULTING
www.dmrarchitects.com

MEMBERS OF THE AMERICAN INSTITUTE OF ARCHITECTS

LLOYD A. ROSENBERG	NJ - AI 05526
KURT A. VIERHEILIG	NJ - AI 17809
PRADEEP KAPOOR	NY - 042197
FERNANDO ROBLEDO	NY - 033804
JANET PINI	NJ - AI 02102900

NOT VALID FOR BIDDING UNLESS SIGNED AND SEALED BY ARCHITECT

777 Terrace Avenue, 6th Floor
Hasbrouck Heights, New Jersey 07604
Tel 201 - 288 - 2600 || Fax 201 - 288 - 2642

NCARB — NATIONAL COUNCIL OF ARCHITECTURAL REGISTRATION BOARDS

CO - 306 184 CT - 05438 NJ - AI 05526
NJ-BOARD OF PROFESSIONAL PLANNERS| - LI 01584
NY - 013023-1 PA - RA - 13437-B

DWG

MECHANICAL LOFT CONSTRUCTION / POWER PLAN

SCALE: As indicated

DATE	DESCRIPTION	DRN	CHK
06/26/2023	BID SET	JC/MD	DG

REV.	DATE	DESCRIPTION		

PROJECT NO.	SHEET NO.
5146	A1.1

Copyright © 2023 by DMR

PLOT DATE: 6/27/2023 2:53:29 PM

1. CONTRACTOR IS RESPONSIBLE FOR CONTACTING THE ROOFING MANUFACTURER HOLDING THE WARRANTY AND MAINTENANCE CONTRACT PRIOR TO BIDDING TO DETERMINE SCOPE REQUIRED TO MAINTAIN EXISTING ROOF WARRANTY.
2. ALL WORK IS NEW UNLESS SPECIFICALLY IDENTIFIED AS EXISTING OR EXISTING TO REMAIN.
3. ALL DIMENSIONS ARE TO EXTERIOR FACE OF WALLS, UNLESS OTHERWISE NOTED.
4. CONTRACTOR SHALL VERIFY AND COORDINATE ROOFING, FLASHINGS AND EQUIPMENT SUPPORT AS REQUIRED WITH FINAL APPROVED HVAC EQUIPMENT SUBMITTALS TO PROVIDE A WATERTIGHT ROOF. ALL EQUIPMENT IS SHOWN SCHEMATICALLY.
5. PATCHING, FLASHINGS, REPAIRS AND TIE-INS TO EXISTING ROOF SHALL BE PROVIDED BY CONTRACTOR AND *SUPERVISED BY THE ROOFING MANUFACTURER HOLDING THE WARRANTY AND MAINTENANCE CONTRACT AS REQUIRED TO MAINTAIN ROOF WARRANTY.*
6. THE CONTRACTOR SHALL PROVIDE TEMPORARY ROOF PROTECTION BOARDS IN WORK AREAS, STORAGE AREAS AND PATHS OF TRANSPORT OF MATERIALS. REMOVE AND INSTALL AS NEEDED DURING ALL PHASES OF THE PROJECT.
7. ALL PERIMETER FIRE CONTAINMENT SYSTEMS, JOINT SYSTEMS, AND PENETRATIONS THROUGH FIRE RATED CONSTRUCTION MUST BE FIRE STOPPED USING LISTED AND APPROVED FIRE STOP ASSEMBLIES.
8. ALL ROOF TERMINATIONS SHALL BE A MINIMUM 8" ABOVE THE ROOF SURFACE UNLESS OTHERWISE NOTED.
9. WHERE ROOF DECK IS SLOPED, PROVIDE PRESSURE TREATED BLOCKING AS REQUIRED TO SET ALL CURBS LEVEL.
10. ALL WOOD BLOCKING AND CURBS SHALL BE PRESSURE TREATED FOR EXTERIOR MARINE GRADE APPLICATIONS.
11. THICKNESS OF WOOD BLOCKING SHALL MATCH THICKNESS OF ADJOINING ROOF INSULATION UNLESS OTHERWISE NOTED.
12. ALL WET INSULATION WILL BE REJECTED.
13. ALL LOOSE FASTENERS, SCRAP MATERIALS AND DEBRIS SHALL BE REMOVED FROM THE ROOF DAILY.
14. COORDINATE PIPE AND CONDUIT PITCH POCKETS AND FLASHINGS WITH THE WORK OF OTHER TRADES, INCLUDING WORK SHOWN ON THE DRAWINGS OF OTHER TRADES.
15. CONTRACTOR SHALL PREVENT CONTAMINATION OF FOREIGN MATERIALS INTO GUTTERS, LEADERS AND PIPE VENTS. AFTER SUBSTANTIAL COMPLETION, THE CONTRACTOR SHALL CLEAN OUT ALL GUTTER AND LEADERS TO ENSURE FREE FLOW.
16. THE CONTRACTOR SHALL LEAVE THE ROOF IN WATERTIGHT CONDITION AT THE END OF EACH WORK SESSION.
17. MONITORING OF WEATHER CONDITIONS SHALL BE THE RESPONSIBILITY OF THE CONTRACTOR. THE CONTRACTOR SHALL BE RESPONSIBLE FOR ANY REPAIR, REPLACEMENT, AND/OR CLEANUP OF EXISTING TO REMAIN SUBSTRATES, BUILDING COMPONENTS, FINISHES, FURNISHINGS AND EQUIPMENT DAMAGED AS A RESULT OF WATER INFILTRATION INTO THE BUILDING DUE TO THE WORK.

ROOF NOTES 3

6" / 12" — ROOF SLOPE

— GLAZING TAG

SS-1 — STANDING SEAM METAL PANEL
WALL / ROOF SYSTEM
ENGLERT S2000
FINISH/ COLOR: CHARCOAL GRAY
KYNAR 500 COATING (REF. TO SPECS.)

CP-1 — EXTERIOR COMPOSITE PANEL SYSTEM
WPS, INC. TRESPA / METEON PANELS
ON ES-500 CONCEALED TRACK SYSTEM
FINISH / COLOR: WOOD DECORS NW03
HARMONY OAK STAIN (REF. TO SPEC.)

ROOF PLAN LEGEND 2

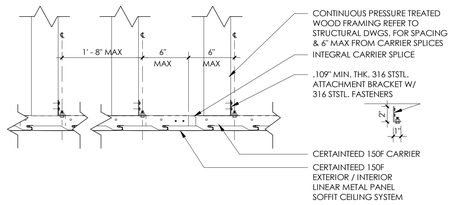

TYP. METAL PANEL CEILING DETAIL 1 1/2" = 1'-0" 6

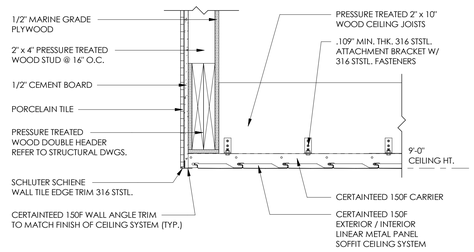

CEILING HEADER DETAIL 1 1/2" = 1'-0" 5

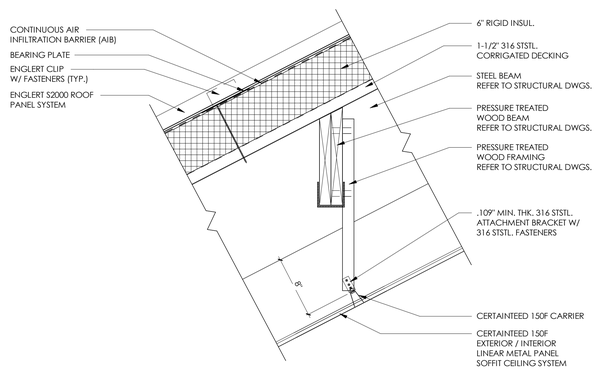

ROOF ASSEMBLY DETAIL 1 1/2" = 1'-0" 4

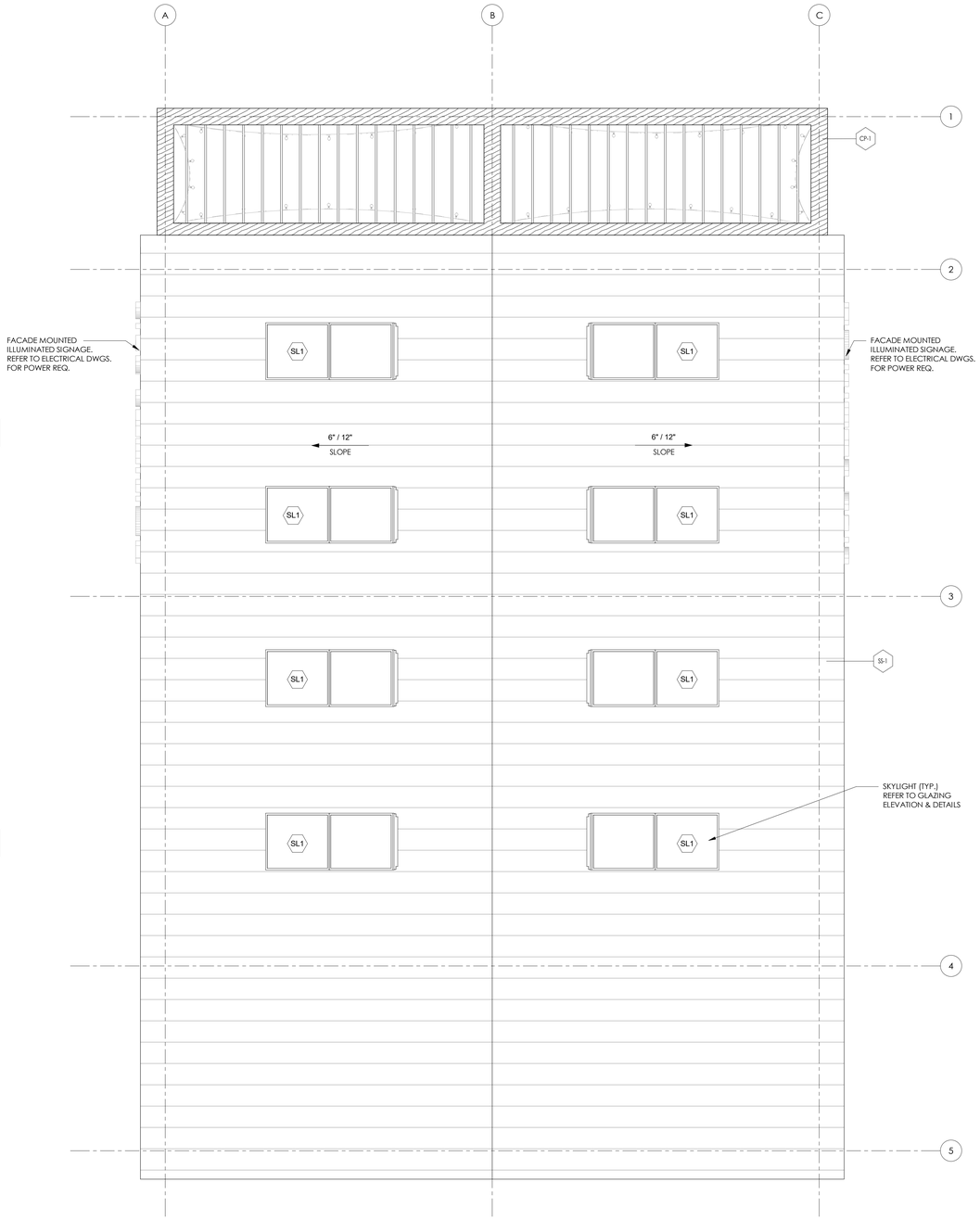

ROOF PLAN 1/4" = 1'-0" 1

Key Plan

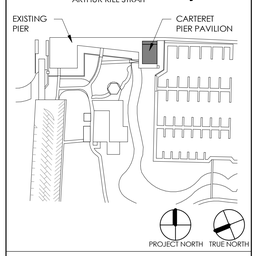

PROJECT

CARTERET PIER PAVILION

WATERFRONT PARK
200 MIDDLESEX AVENUE BLOCK 201 LOT 4
CARTERET, NEW JERSEY 07008

GEOTECHNICAL & STRUCTURAL ENGINEER
McLaren ENGINEERING GROUP
McLaren Technical Services, Inc.
530 Chestnut Ridge Road
Woodcliff Lake, New Jersey 07677
201.775.6000 | www.mgmclaren.com

MEP ENGINEER
KeRi ENGINEERING PC
911 SPRINGFIELD ROAD, SUITE 2
UNION, NEW JERSEY 07083
973.866.5374
INFO@KERIENGINEERING.COM

FOOD SERVICE DESIGN CONSULTANT
RAYMOND/RAYMOND ASSOCIATES
FOOD SERVICE CONSULTANTS SINCE 1938
44 ST. JOHN STREET
GOSHEN, NEW YORK
845.360.5112
INFO@RRADESIGNS.COM

DMR
ARCHITECTURE
PLANNING
ENGINEERING
INTERIORS
CONSULTING
www.dmrarchitects.com

MEMBERS OF THE AMERICAN INSTITUTE OF ARCHITECTS

LLOYD A. ROSENBERG	NJ - AI 05526
KURT A. VIERHEILIG	NJ - AI 17809
PRADEEP KAPOOR	NY - 042197
FERNANDO ROBLEDO	NY - 033804
JANET PINI	NJ - AI 02102900

NOT VALID FOR BIDDING UNLESS SIGNED AND SEALED BY ARCHITECT
777 Terrace Avenue, 6th Floor
Hasbrouck Heights, New Jersey 07604
Tel 201 - 288 - 2600 || Fax 201 - 288 - 2662

NCARB — NATIONAL COUNCIL OF ARCHITECTURAL REGISTRATION BOARDS
CO - 306 184 CT - 05438 NJ - AI 05526
NJ-BOARD OF PROFESSIONAL PLANNERS) - LI 01584
NY - 013025-1 PA - RA - 13437-B

DWG
ROOF PLAN & DETAILS

SCALE: As indicated

DATE	DESCRIPTION	DRN	CHK
06/26/2023	BID SET	JC/MD	DG

REV.	DATE	DESCRIPTION

PROJECT NO.	SHEET NO.
5146	A2.0

Copyright © 2023 by DMR PLOT DATE: 6/27/2023 2:53:31 PM

C:\Users\mcarlo\Documents\Revit\5146_Carteret_Pavilion_mariaRR246.rvt
6/27/2023 2:53:31 PM

1. CEILING INSTALLATION SHALL CONFIRM TO CISCA SEISMIC INSTALLATION ZONE 2 CATEGORY "C". EACH INDIVIDUAL FIXTURE AND ATTACHMENT WITH A WEIGHT OF 10 LBS OR LESS SHALL HAVE ONE 12 GAUGE HANGER WIRE SECURED TO THE STRUCTURE ABOVE. EACH FIXTURE WEIGHING MORE THAN 10 LB BUT LESS THAN 56 LBS. SHALL BE ATTACHED WITH (2) 12 GAUGE WIRES ATTACHED AT DIAGONAL CORNERS TO THE STRUCTURE ABOVE. ANY FIXTURE WEIGHING MORE THAN 56 LBS MUST BE SUPPORTED INDEPENDENTLY OF THE CEILING SUSPENSION SYSTEM.

   A. EXCEPTION:
      A. CEILING AREAS OF LESS THAN 144 SF WHERE THE SURROUNDING WALLS CONNECT DIRECTLY TO THE STRUCTURE.

      B. GYPSUM BOARD CONSTRUCTION ATTACHED TO SUSPENDED MEMBERS THAT SUPPORT A CEILING EXTENDING FROM WALL TO WALL.

   B. THE MAIN RUNNER/CROSS RUNNER INTERSECTIONS AND ALL GRID SPLICES MUST HAVE AN AVERAGE ULTIMATE TEST STRENGTH OF 60 LBS OR MORE IN BOTH TENSION AND COMPRESSION. THE TENSILE TEST MUST ALLOW FOR A 5 DEGREE OFFSET OF THE SPECIFIED IN ZONE 3-4 PROVISIONS.

   C. ALL PERIMETER CLOSURE ANGLES OR CHANNELS MUST PROVIDE A SUPPORT LEDGE OF APPROXIMATELY 7/8 INCH OR GREATER, AND ALL PERIMETER ENDS OF GRID MEMBERS MUST REST ON THE LEDGE OR MOLDING WITH AT LEAST 3/8 INCH CLEARANCE FROM AN EDGE OR WALL. REFER TO CISCA RECOMMENDATIONS FOR DIRECT HUNG ACOUSTICAL TILE AND LAY-IN PANEL CEILINGS, SEISMIC ZONES 0-2, MAY 2004 FOR ADDITIONAL INFORMATION.

   D. REFER TO CISCA RECOMMENDATIONS FOR DIRECT HUNG LAY-IN PANEL CEILINGS, SEISMIC ZONES 0-2, MAY 2004 FOR COMPLETE INSTALLATION INFORMATION.

2. CEILING SUSPENSION SYSTEM IS TO CARRY ALL LOADS SUSPENDED FROM THE SYSTEM PLUS AN ADDITIONAL 200 LBS LOAD AT MIDSPAN. MIDSPAN DEFLECTION NOT TO EXCEED 1/360 OF THE SPAN.

3. ALL CEILING MOUNTED DEVICES, SPRINKLER HEADS, AND FIXTURES SHALL BE CENTERED ONTO AN INDIVIDUAL CEILING PANELS UNLESS OTHERWISE NOTED.

4. CONTRACTOR TO COORDINATE LIGHTING FIXTURE MOUNTING/TRIM WITH SCHEDULED CEILING SYSTEMS. FOLLOW MANUFACTURER INSTRUCTIONS FOR MOUNTING & TRIM FOR SPECIFIC CEILING SYSTEM WHEN ORDERING LIGHTING COMPONENTS.

5. THE GENERAL CONTRACTOR SHALL REVIEW ARCHITECTURAL AND ELECTRICAL DRAWINGS FOR COORDINATION OF ALL LIGHTING & EQUIPMENT REQUIREMENTS. ANY INFORMATION SHOWN ONLY IN ONE LOCATION SHALL BE INTERPRETED AS BEING REQUIRED FOR BOTH. SCRIBE CEILING MATERIALS CAREFULLY FOR A TIGHT FIT.

6. ENTIRE PROJECT TO BE FULLY SPRINKLERED. REFER TO FIRE PROTECTION DRAWINGS (FP-SERIES). LOCATE SPRINKLER HEADS IN CENTER OF CEILING PANELS OTHERWISE NOTED. SCRIBE CEILING MATERIALS CAREFULLY FOR A TIGHT FIT. ALIGN SPRINKLER HEADS WITH EACH OTHER IN BOTH NORTH/SOUTH AND EAST/WEST DIRECTIONS WHERE THEY OCCUR IN THE SAME SPACE.

7. REFER TO DRAWINGS FOR CEILING DETAILS.

8. CEILING HEIGHTS INDICATED ON REFLECTED CEILING PLANS ARE IN RELATION THE FINISH FLOOR BELOW THAT CEILING. WHERE A CEILING IS ABOVE MULTIPLE FINISH FLOOR LEVELS, THE CEILING HEIGHT INDICATED IS IN RELATION TO THE LOWEST FINISH FLOOR LEVEL BELOW THAT CEILING.

REFLECTED CEILING NOTES | 6

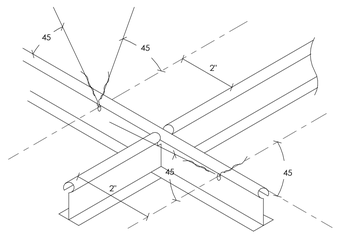

NOTE:
HANGER WIRES "N" & "S" ARE IN THE SAME VERTICAL PLANE AS THE MAIN RUNNER. HANGER WIRES "E" & "W" ARE IN VERTICAL PLANES PERPENDICULAR TO THE MAIN RUNNER. TYPICAL BRACING POINT SHALL BE AT 12 FT. O.C. EACH WAY WITH THE FIRST POINT WITHIN 4 FT FROM EACH WALL. PER ASTM C635 AND C636

SEISMIC CEILING DETAIL 1 1/2" = 1'-0" | 5

STORAGE — ROOM NAME
XXX — ROOM NUMBER
CEILING TYPE
CEILING HEIGHT FROM FINISH FLOOR

EXP. EXPOSED CEILING

GYP-1 5/8" MOISTURE RESISTANT TYPE C GYPSUM PANELS, PAINTED.
SHERWIN WILLIAMS EXTRA WHITE SW7006
REFER TO 1 HOUR RATED WOOD FLOOR ASSEMBLY UL DESIGN L501

MP-1 EXTERIOR / INTERIOR LINEAR METAL PANEL CEILING / SOFFIT SYSTEM AT CEILING, SOFFIT & FASCIA
CERTAINTEED 150F LINEAR METAL SOFFIT SYSTEM 11/16" THICK ALUMIUM 6" WIDE
WOOD-LOOK FINISH/COLOR: NORTHWEST MOUNTAIN HEMLOCK (8486) (REF. TO SPEC.)
CONTRACTOR TO PROVIDE EDGE TRIM AT ALL CORNERS, TERMINITIONS & TRANSITIONS.

MP-2 EXTERIOR / INTERIOR METAL PANEL AT BEAM WRAP
CERTAINTEED
WOOD-LOOK FINISH/COLOR: NORTHWEST MOUNTAIN HEMLOCK (8486) (REF. TO SPEC.)

CP-1 EXTERIOR / INTERIOR COMPOSITE PANEL SYSTEM
WPS, INC. TRESPA / METEON PANELS ON ES-500 316 STAINLESS STEEL CONCEALED TRACK SYSTEM
FINISH / COLOR: WOOD DECORS NW03 HARMONY OAK STAIN (REF. TO SPEC.)

HDB-1 HYBRID ARCHITECTURAL DECORATIVE BEAM ELEMENT
GEOLAM INC SOLEO 6040 2" X 6" @ 16" O.C.
316 STSTL. U-BRACKET FASTENER
FINISH / COLOR: TEAK

SS-2 STANDING SEAM METAL PANEL SOFFIT SYSTEM
ENGLERT SERIES 84000
FINISH/ COLOR: CHARCOAL GRAY
KYNAR 500 COATING (REF. TO SPECS.)

WALL OR SOFFIT MOUNTED EXIT LIGHT

GLAZING TAG

EH-1 — WALL MOUNTED ELECTRIC HEATER.
SEE ELECTRICAL DWGS. FOR MORE INFO.

LVF-1 — LOW VELOCITY FAN
SEE ELECTRICAL DWGS. FOR MORE INFO.

1. REFER TO ELECTRICAL DRAWINGS FOR LIGHTING FIXTURE SCHEDULE & SPECIFICATIONS.
2. REFER TO MECHANICAL DRAWINGS FOR MECHANICAL UNIT SCHEDULE.
3. PROVIDE ACCESS PANELS IN METAL PANEL SOFFITS FOR ROLLING SHUTTERS.
4. PROVIDE ACCESS PANELS IN METAL PANEL CEILINGS FOR LED LIGHTING FIXTURE DRIVERS.
5. PROVIDE ACCESS PANELS FOR ILLUMINATED SIGNAGE.
6. PROVIDE BLOCKING FOR ALL LIGHTING FIXTURES.

REFLECTED CEILING PLAN LEGEND | 4

SYMBOL	I.D.	FIXTURE TYPE	MANUFACTURER	MODEL #	COMMENTS
	A	LED COMPACT RECESSED DOWNLIGHT ADJUSTABLE LIGHT DISTRIBUTION	BEGA	MM55844-K3-BLK	
	B	12" LED STEM SUSPENSION GLOBE LIGHT	VISA LIGHTING	CP2124-CAP-L30K/H-MVOLT-DBL/PTD-FRST-TH-OAHXX	HEIGHT 10'-0" BOTT. OF FIXTURE
	C	4' LED SURFACE MOUNTED LIGHT	PEERLESS ELECTRIC	AP2W-4-60-40K-A4-LA-S-C1-120-MV	
	D	4' LED SUSPENDED LIGHT	PEERLESS ELECTRIC	AP2W-4-60-40K-A4-LA-P-C1-120-MV	
	E	LED EXIT SIGN	ISOLATE	HLX-EM-R-1-MB-SD	
	F	LED WALL MOUNT EXTERIOR LIGHT	PERFORMANCE LIGHITNG	M30-36-T3-AM-3K-UNV-0/10V-REM	
	G	LED SUSPENDED DECORATIVE STRINGLIGHT SYSTEM	PRIMUS LIGHITNG	DSW-18-120V-S14/27/150-NA-TBK	

LIGHTING FIXTURE SCHEDULE | 2

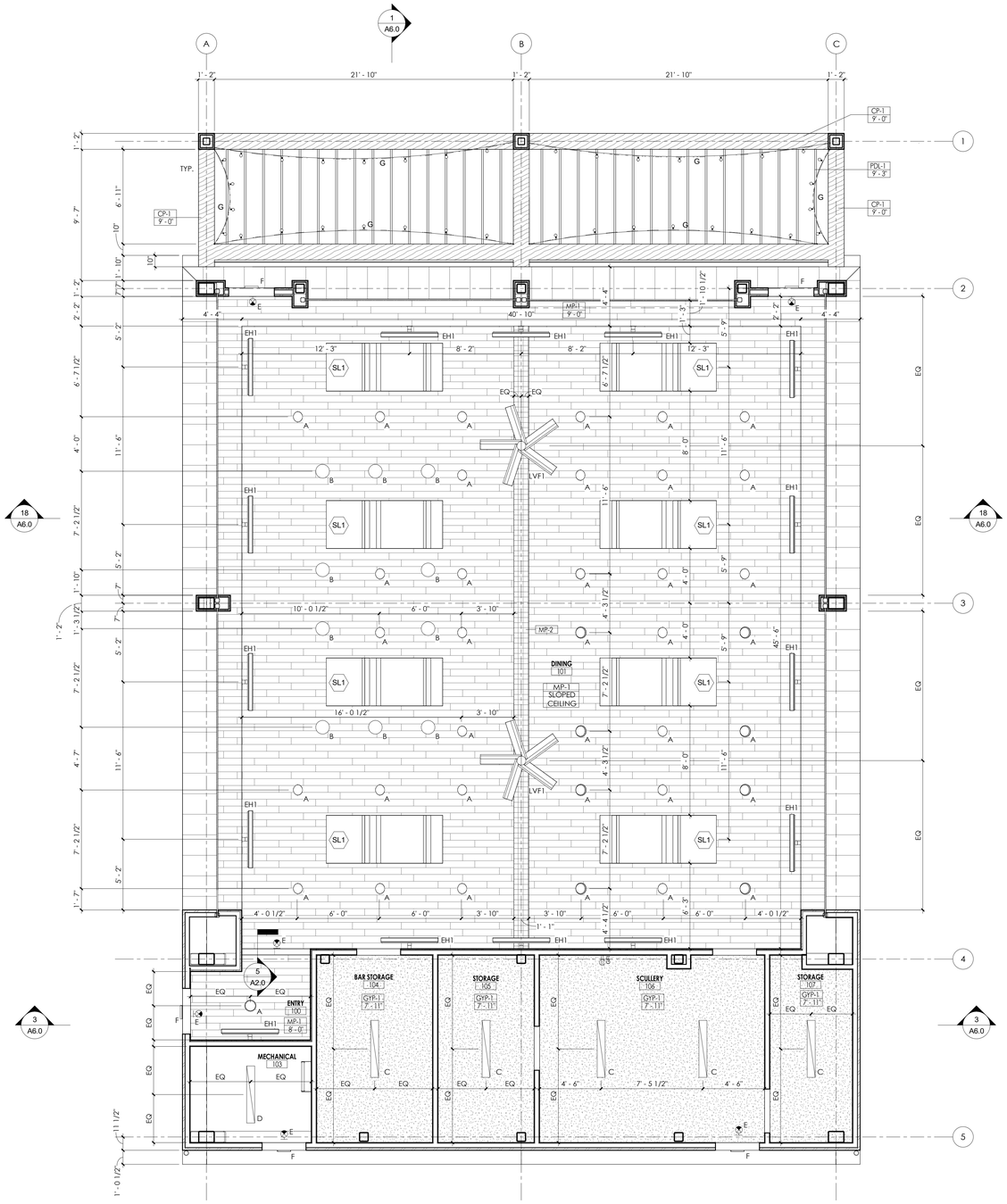

PAVILION REFLECTED CEILING PLAN 1/4" = 1'-0" | 1

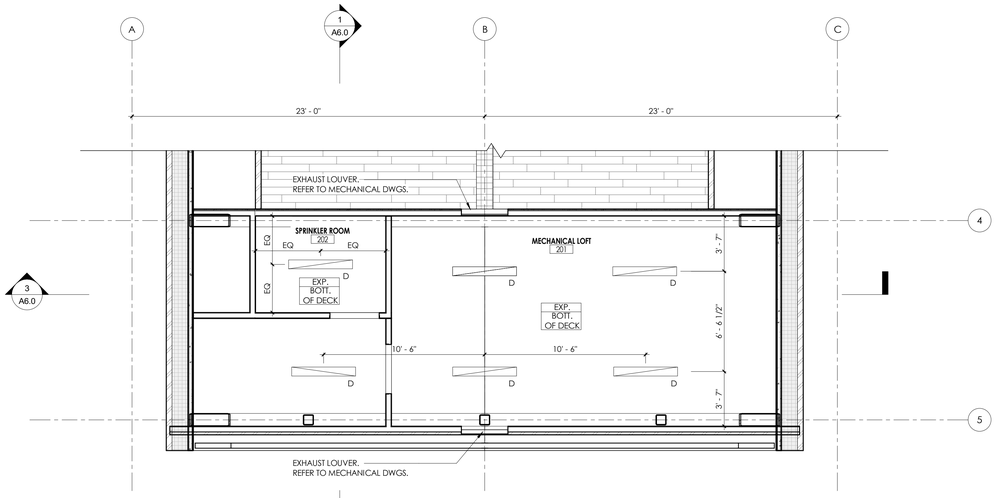

ATTIC REFLECTED CEILING PLAN 1/4" = 1'-0" | 3

Key Plan

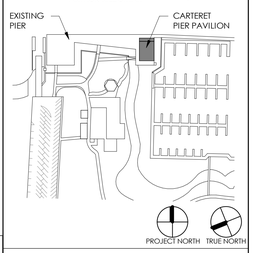

PROJECT
CARTERET PIER PAVILION

WATERFRONT PARK
200 MIDDLESEX AVENUE BLOCK 201 LOT 4
CARTERET, NEW JERSEY 07008

GEOTECHNICAL & STRUCTURAL ENGINEER
McLaren ENGINEERING GROUP
McLaren Technical Services, Inc.
530 Chestnut Ridge Road
Woodcliff Lake, New Jersey 07677
201.775.6000 | www.mgmclaren.com

MEP ENGINEER
KeRi ENGINEERING PC
911 SPRINGFIELD ROAD, SUITE 2
UNION, NEW JERSEY 07083
973.866.5374
INFO@KERIENGINEERING.COM

FOOD SERVICE DESIGN CONSULTANT
RAYMOND/RAYMOND ASSOCIATES
FOOD SERVICE CONSULTANTS SINCE 1938
44 ST. JOHN STREET
GOSHEN, NEW YORK
845.360.5112
INFO@RRADESIGNS.COM

DMR
ARCHITECTURE
PLANNING
ENGINEERING
INTERIORS
CONSULTING
www.dmrarchitects.com

MEMBERS OF THE AMERICAN INSTITUTE OF ARCHITECTS

LLOYD A. ROSENBERG	NJ - AI 05526
KURT A. VIERHEILIG	NJ - AI 17809
PRADEEP KAPOOR	NY - 042197
FERNANDO ROBLEDO	NY - 033804
JANET PINI	NJ - AI 02102900

NOT VALID FOR BIDDING UNLESS SIGNED AND SEALED BY ARCHITECT

777 Terrace Avenue, 6th Floor
Hasbrouck Heights, New Jersey 07604
Tel 201 - 288 - 2600 || Fax 201 - 288 - 2642

NCARB NATIONAL COUNCIL OF ARCHITECTURAL REGISTRATION BOARDS
CO - 306 184 CT - 05438 NJ - AI 05526
NJ-BOARD OF PROFESSIONAL PLANNERS) - LI 015584
NY - 013025-1 PA - RA - 13437-B

DWG
PAVILION & ATTIC REFLECTED CEILING PLAN & DETAILS

SCALE: As indicated

DATE	DESCRIPTION	DRN	CHK
06/26/2023	BID SET	JC/MD	DG

REV.	DATE	DESCRIPTION

PROJECT NO. 5146
SHEET NO. A3.0

Copyright © 2023 by DMR
PLOT DATE: 6/27/2023 2:53:33 PM

C:\Users\mcka\Documents\Revit\5146_Carteret_Pavilion_mckaRK246.rvt
6/27/2023 2:53:33 PM

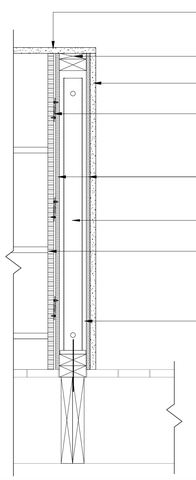

BACK BAR SECTION DETAIL 1 1/2" = 1'-0" 15

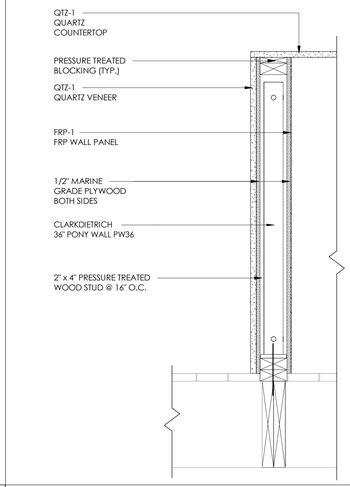

BACK BAR SECTION DETAIL 1 1/2" = 1'-0" 14

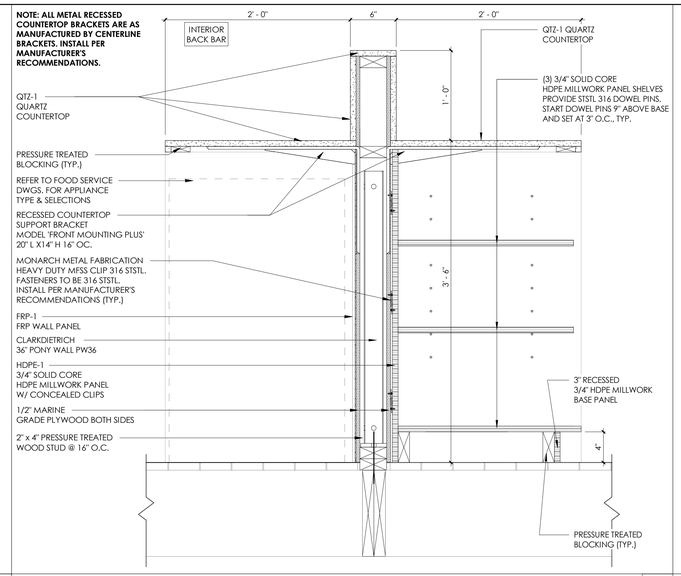

BACK BAR SECTION DETAIL 1 1/2" = 1'-0" 9

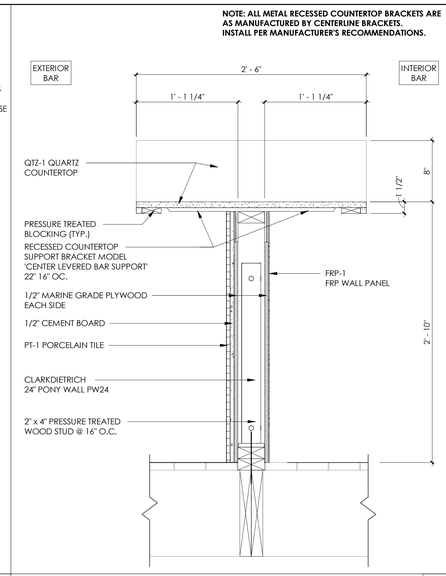

ACCESSIBLE BAR SECTION DETAIL 1 1/2" = 1'-0" 4

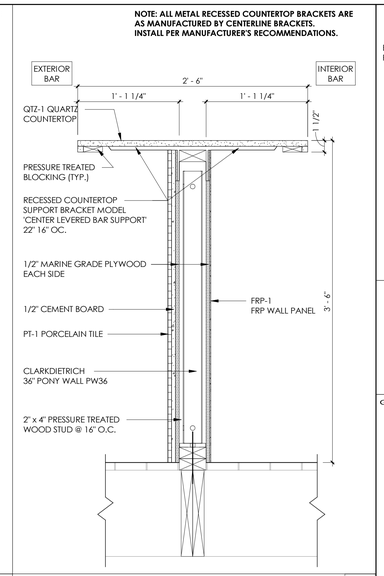

TYP. BAR SECTION DETAIL 1 1/2" = 1'-0" 3

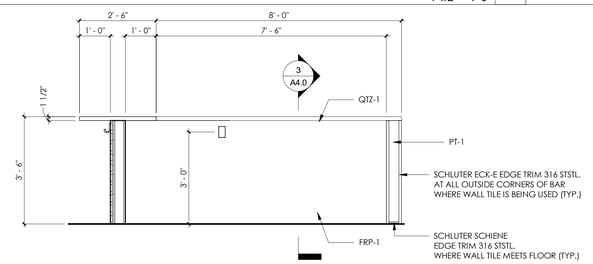

BAR INTERIOR SIDE ELEVATION 1/2" = 1'-0" 8

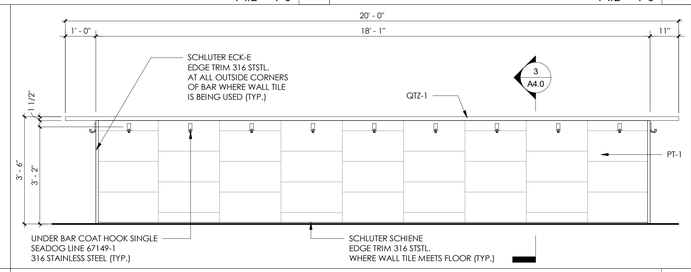

BAR EXTERIOR FRONT ELEVATION 1/2" = 1'-0" 2

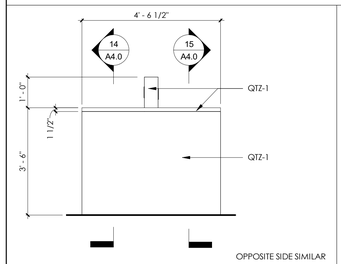

BACK BAR SIDE ELEV. 1/2" = 1'-0" 13

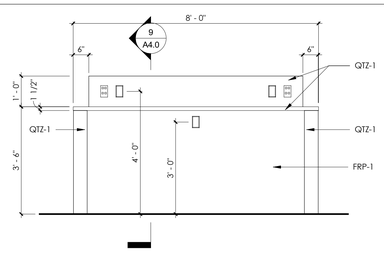

BACK BAR FRONT ELEV. 1/2" = 1'-0" 12

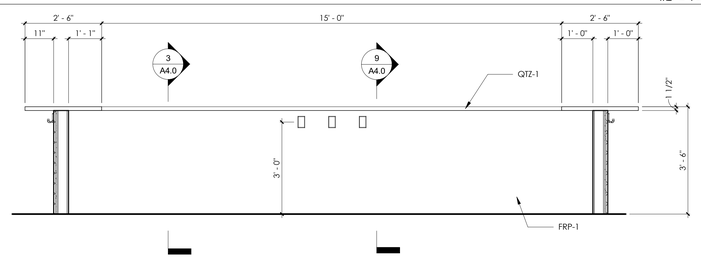

BAR INTERIOR REAR ELEVATION 1/2" = 1'-0" 7

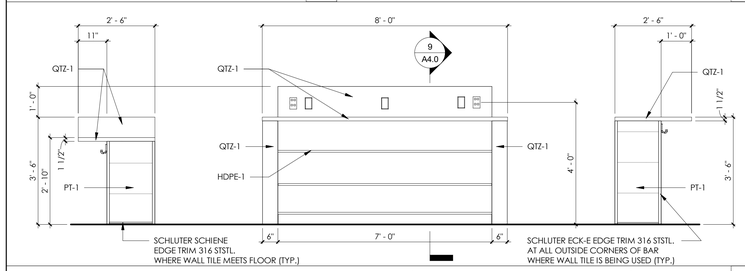

BACK BAR REAR ELEVATION 1/2" = 1'-0" 11

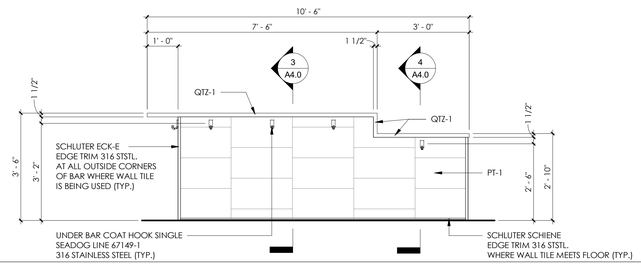

BAR EXTERIOR OTHER SIDE ELEVATION 1/2" = 1'-0" 6

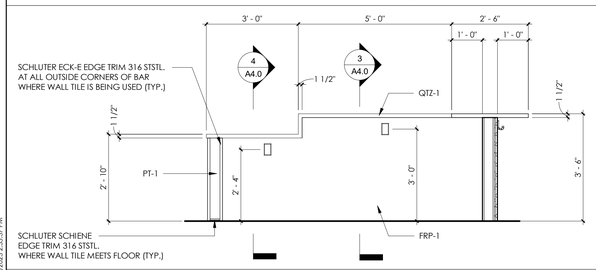

BAR INTERIOR SIDE ELEVATION 1/2" = 1'-0" 10

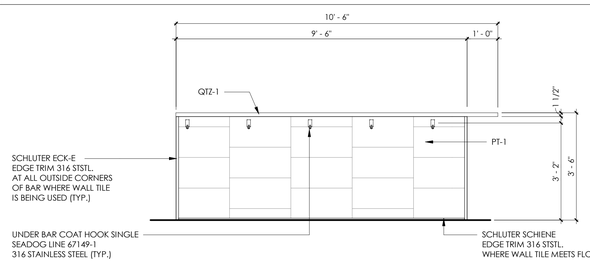

BAR EXTERIOR SIDE ELEVATION 1/2" = 1'-0" 5

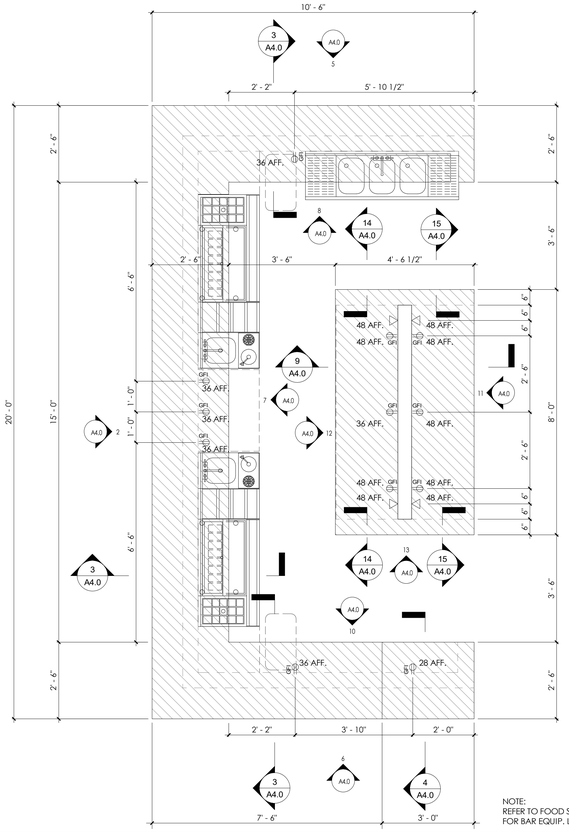

NOTE:
REFER TO FOOD SERVICES DWGS.
FOR BAR EQUIP. LAYOUT & SCHEDULE.

PAVILION BAR ENLARGED PLAN 1/2" = 1'-0" 1

C:\Users\mcnicol\Documents\Revit\5146_Carteret_Pavilion_mcnicolR24.rvt
6/27/2023 2:53:37 PM

Key Plan

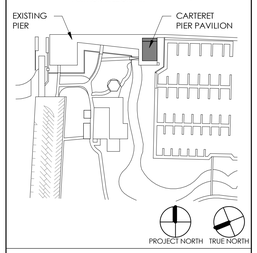

PROJECT

CARTERET PIER PAVILION

WATERFRONT PARK
200 MIDDLESEX AVENUE BLOCK 201 LOT 4
CARTERET, NEW JERSEY 07008

GEOTECHNICAL & STRUCTURAL ENGINEER

McLaren ENGINEERING GROUP
McLaren Technical Services, Inc.
530 Chestnut Ridge Road
Woodcliff Lake, New Jersey 07677
201.775.6000 | www.mgmclaren.com

MEP ENGINEER

KeRi ENGINEERING PC
911 SPRINGFIELD ROAD, SUITE 2
UNION, NEW JERSEY 07083
973.866.5374
INFO@KERIENGINEERING.COM

FOOD SERVICE DESIGN CONSULTANT

RAYMOND/RAYMOND ASSOCIATES
FOOD SERVICE CONSULTANTS SINCE 1938
44 ST. JOHN STREET
GOSHEN, NEW YORK
845.360.5112
INFO@RRADESIGNS.COM

DMR
ARCHITECTURE
PLANNING
ENGINEERING
INTERIORS
CONSULTING
www.dmrarchitects.com

MEMBERS OF THE AMERICAN INSTITUTE OF ARCHITECTS

LLOYD A. ROSENBERG	NJ - AI 05526
KURT A. VIERHEILIG	NJ - AI 17809
PRADEEP KAPOOR	NY - 042197
FERNANDO ROBLEDO	NY - 030804
JANET PINI	NJ - AI 02102900

NOT VALID FOR BIDDING UNLESS SIGNED AND SEALED BY ARCHITECT

777 Terrace Avenue, 6th Floor
Hasbrouck Heights, New Jersey 07604
Tel 201 - 288 - 2600 || Fax 201 - 288 - 2662

NCARB NATIONAL COUNCIL OF ARCHITECTURAL REGISTRATION BOARDS

CO - 306 184 CT - 05438 NJ - AI 05526
NJ-BOARD OF PROFESSIONAL PLANNERS) - LI 01584
NY - 013025-1 PA - RA - 13437-B

DWG
ENLARGED BAR AREA PLAN, ELEVATIONS & SECTION DETAILS

SCALE As indicated

DATE	DESCRIPTION	DRN	CHK
06/26/2023	BID SET	JC/MD	DG

REV.	DATE	DESCRIPTION

PROJECT NO. 5146
SHEET NO. A4.0

Copyright © 2023 by DMR PLOT DATE: 6/27/2023 2:53:37 PM

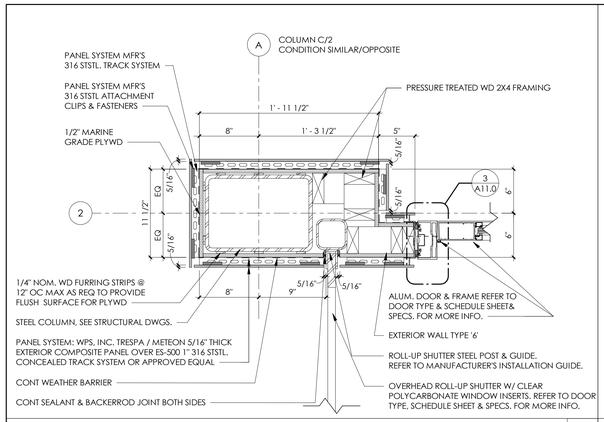

COLUMN ENCL. PLAN DETAIL 1 1/2" = 1'-0" 16

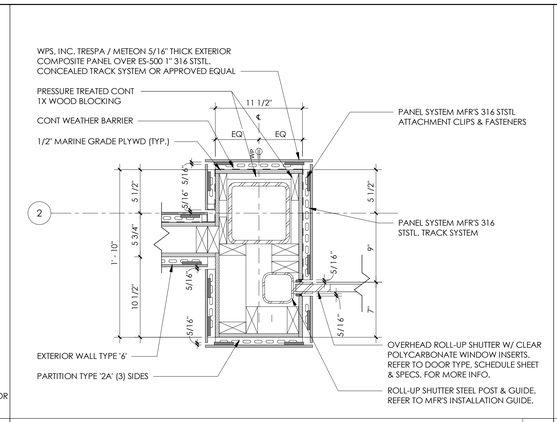

COLUMN ENCL. PLAN DETAIL 1 1/2" = 1'-0" 12

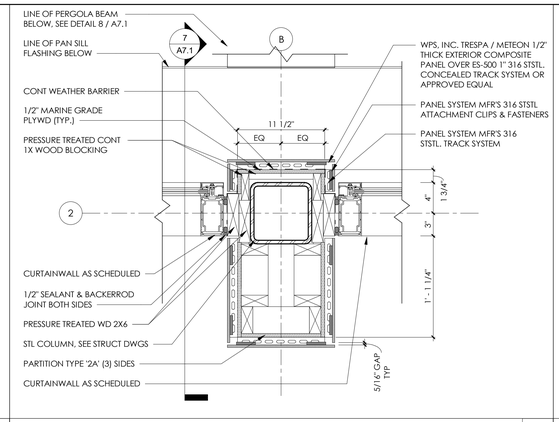

CLERESTORY COLUMN ENCL. PLAN DETAIL 1 1/2" = 1'-0" 8

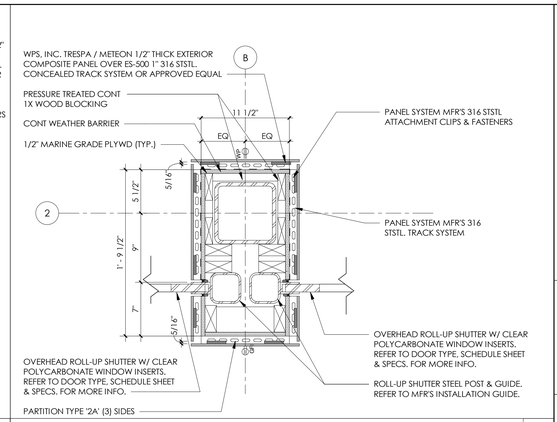

COLUMN ENCL. PLAN DETAIL 1 1/2" = 1'-0" 4

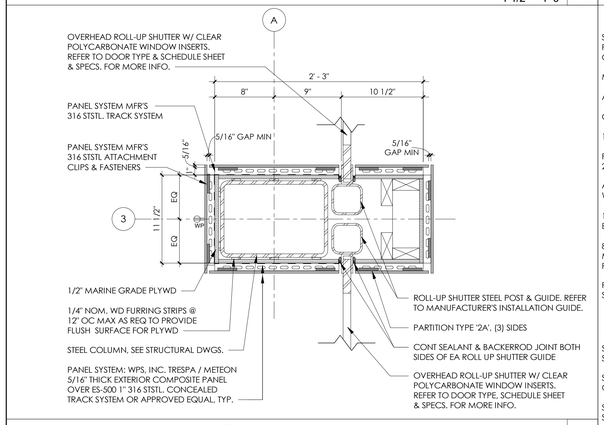

COLUMN ENCL. PLAN DETAIL 1 1/2" = 1'-0" 15

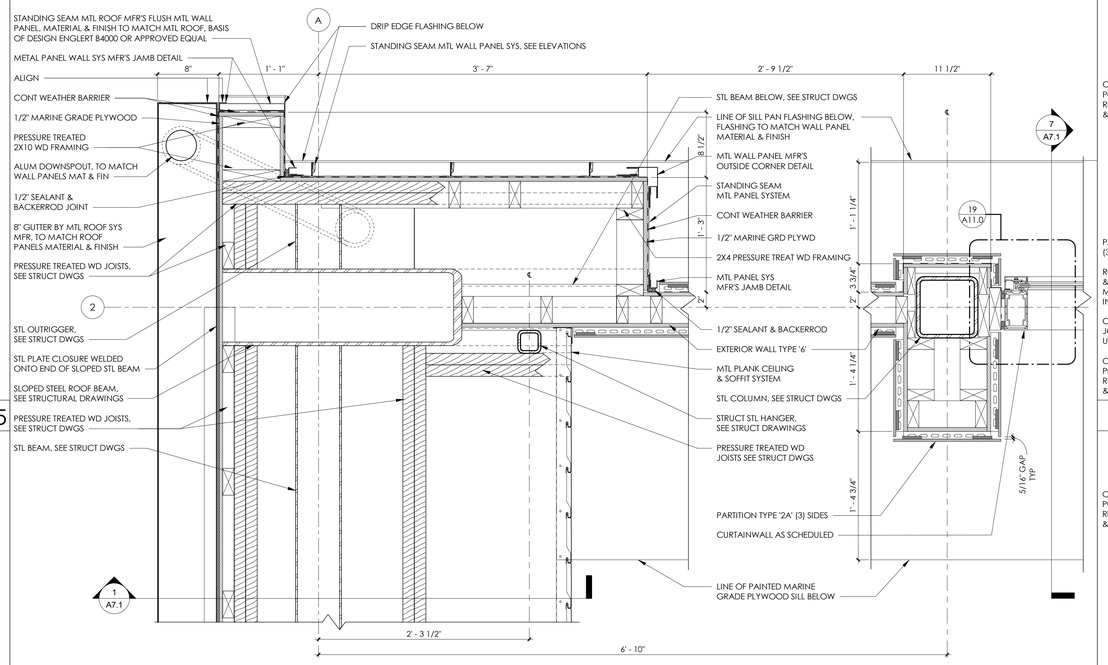

CLERESTORY CORNER PLAN DETAIL 1 1/2" = 1'-0" 6

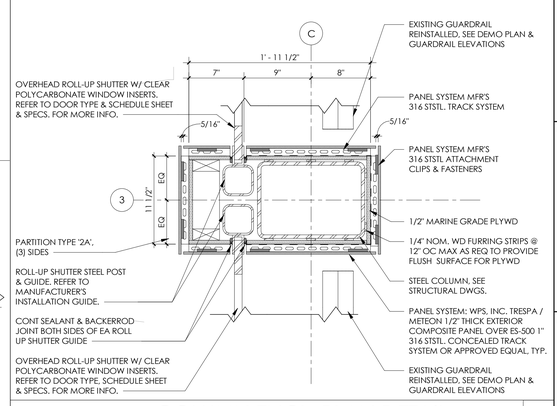

COLUMN ENCL. PLAN DETAIL 1 1/2" = 1'-0" 3

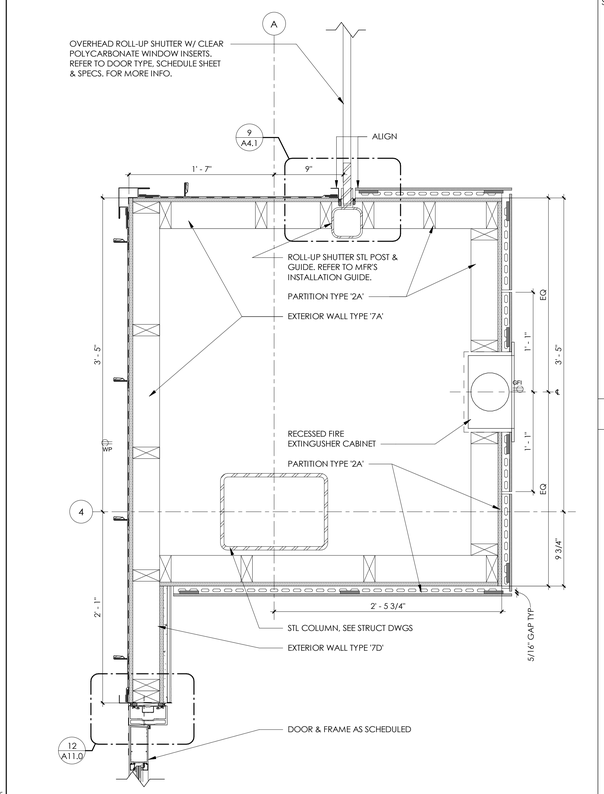

COLUMN ENCL. PLAN DETAIL 1 1/2" = 1'-0" 13

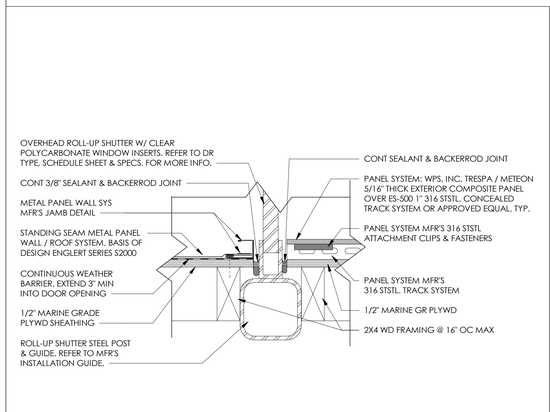

MTL PANEL JAMB @ SHUTTERS 3" = 1'-0" 9

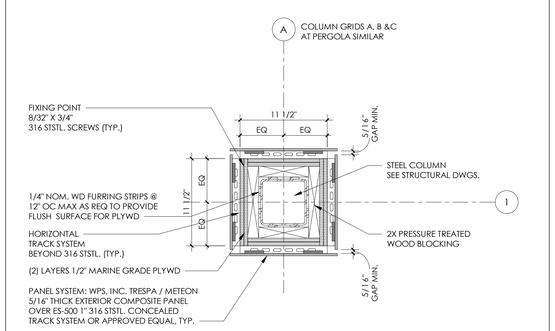

PERGOLA COLUMN ENCL. PLAN DETAIL 1 1/2" = 1'-0" 5

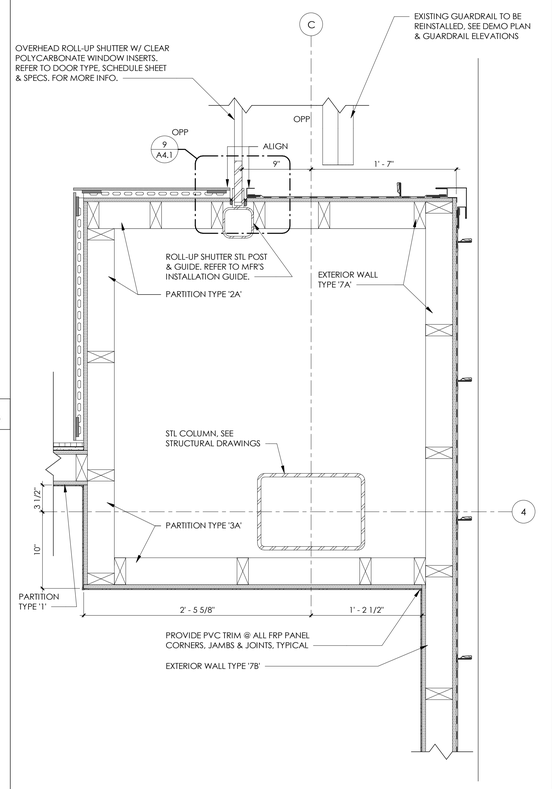

COLUMN ENCL. PLAN DETAIL 1 1/2" = 1'-0" 1

Key Plan

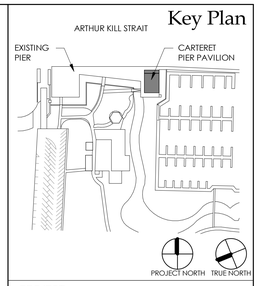

PROJECT

CARTERET PIER PAVILION

WATERFRONT PARK
200 MIDDLESEX AVENUE BLOCK 201 LOT 4
CARTERET, NEW JERSEY 07008

GEOTECHNICAL & STRUCTURAL ENGINEER
McLaren ENGINEERING GROUP
McLaren Technical Services, Inc.
530 Chestnut Ridge Road
Woodcliff Lake, New Jersey 07677
201.775.6000 | www.mgmclaren.com

MEP ENGINEER
KeRi ENGINEERING PC
911 SPRINGFIELD ROAD, SUITE 2
UNION, NEW JERSEY 07083
973.866.5374
INFO@KERIENGINEERING.COM

FOOD SERVICE DESIGN CONSULTANT
RAYMOND/RAYMOND ASSOCIATES
FOOD SERVICE CONSULTANTS SINCE 1938
44 ST. JOHN STREET
GOSHEN, NEW YORK
845.360.5112
INFO@RRADESIGNS.COM

DMR
ARCHITECTURE
PLANNING
ENGINEERING
INTERIORS
CONSULTING
www.dmrarchitects.com

MEMBERS OF THE AMERICAN INSTITUTE OF ARCHITECTS

LLOYD A. ROSENBERG	NJ - AI 05526
KURT A. VIERHEILIG	NJ - AI 17809
PRADEEP KAPOOR	NY - 042197
FERNANDO ROBLEDO	NY - 033804
JANET PINI	NJ - AI 02102900

NOT VALID FOR BIDDING UNLESS SIGNED AND SEALED BY ARCHITECT

777 Terrace Avenue, 6th Floor
Hasbrouck Heights, New Jersey 07604
Tel 201 - 288 - 2600 || Fax 201 - 288 - 2662

NCARB NATIONAL COUNCIL OF ARCHITECTURAL REGISTRATION BOARDS

CO - 306 184 CT - 05438 NJ - AI 05526
NJ-BOARD OF PROFESSIONAL PLANNERS) - LI 01584
NY - 013025-1 PA - RA - 13437-B

DWG
ENLARGED PLAN DETAILS

SCALE: As indicated

DATE	DESCRIPTION	DRN	CHK
06/29/2023	BID SET	JC/MD	DG

REV.	DATE	DESCRIPTION

PROJECT NO. 5146
SHEET NO. A4.1

Copyright © 2023 by DMR
PLOT DATE: 6/27/2023 2:53:40 PM

C:\Users\mandd\Documents\Revit\5146_Carteret_Pavilion_mandREANL.rvt
6/27/2023 2:53:40 PM

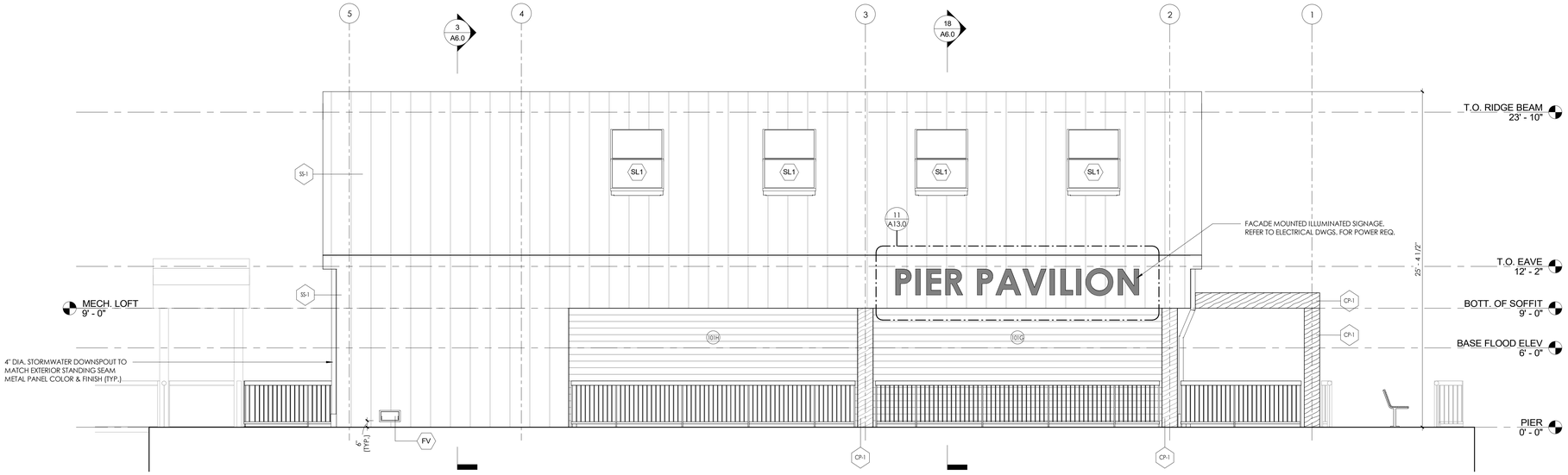

BUILDING ELEVATION - EAST 1/4" = 1'-0" 9

1. ARCHITECTURAL DATUM ELEVATION **0'-0"** = SITE DATUM ELEVATION **8'-0"+-**. SEE SITE AND CIVIL DRAWINGS.
2. UNLESS OTHERWISE NOTED, VERTICAL DATUMS ARE GIVEN TO NOMINAL TOP OF FINISH FLOOR (TYPICAL TOP OF SLAB), TOP OF ROOF DECK OR TOP OF PERIMETER BLOCKING.
3. BFE (BASE FLOOD ELEVATION) INDICATED AS PER NATIONAL FLOOD INSURANCE PROGRAM FLOOD INSURANCE RATE MAP 340257 0079 G.

EXTERIOR ELEVATION & BUILDING SECTION NOTES 3

D#	DOOR AND FRAME
##	GLAZING TAG
FV	SMART VENT 1540-510 FLOOD VENT. BOTTOM OF FLOOD VENT TO BE INSTALLED 6" ABOVE FINISHED PIER DECKING.
SS-1	STANDING SEAM METAL PANEL WALL / ROOF SYSTEM ENGLERT SERIES 2500 FINISH/ COLOR: CHARCOAL GRAY KYNAR 500 COATING (REF. TO SPECS.)
CP-1	EXTERIOR COMPOSITE PANEL SYSTEM WPS, INC. TRESPA / METEON PANELS ON ES-500 CONCEALED TRACK SYSTEM FINISH / COLOR: WOOD DECORS NW03 HARMONY OAK STAIN (REF. TO SPEC.)

EXTERIOR ELEVATION LEGEND 2

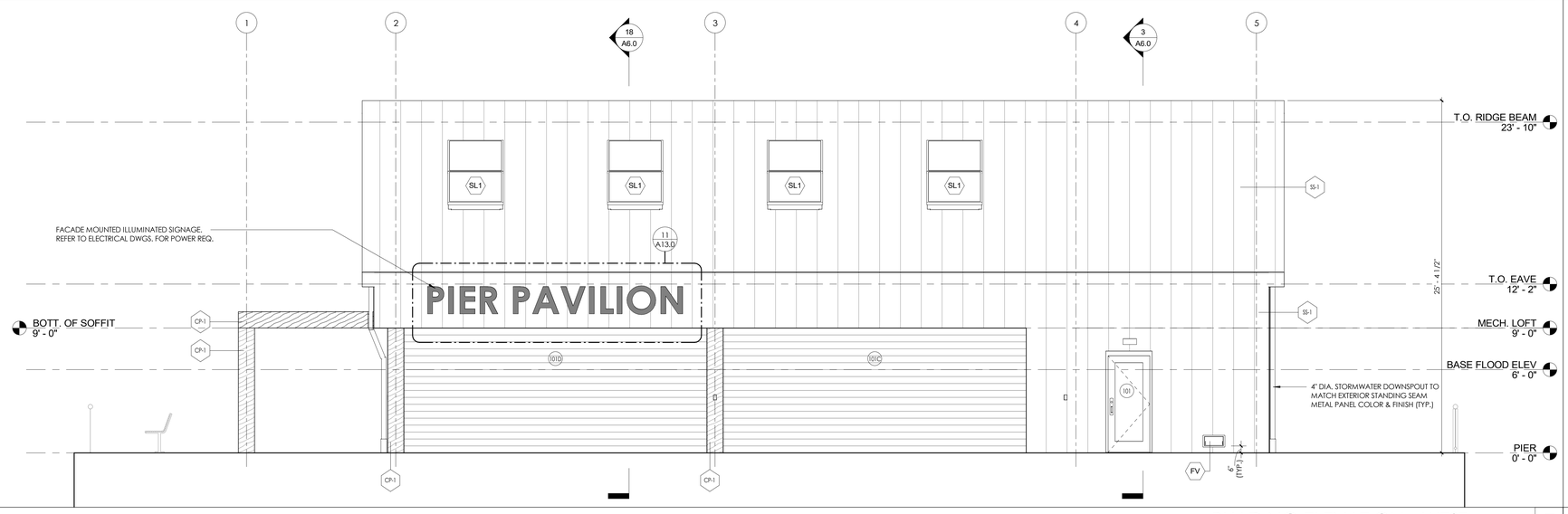

BUILDING ELEVATION - WEST 1/4" = 1'-0" 7

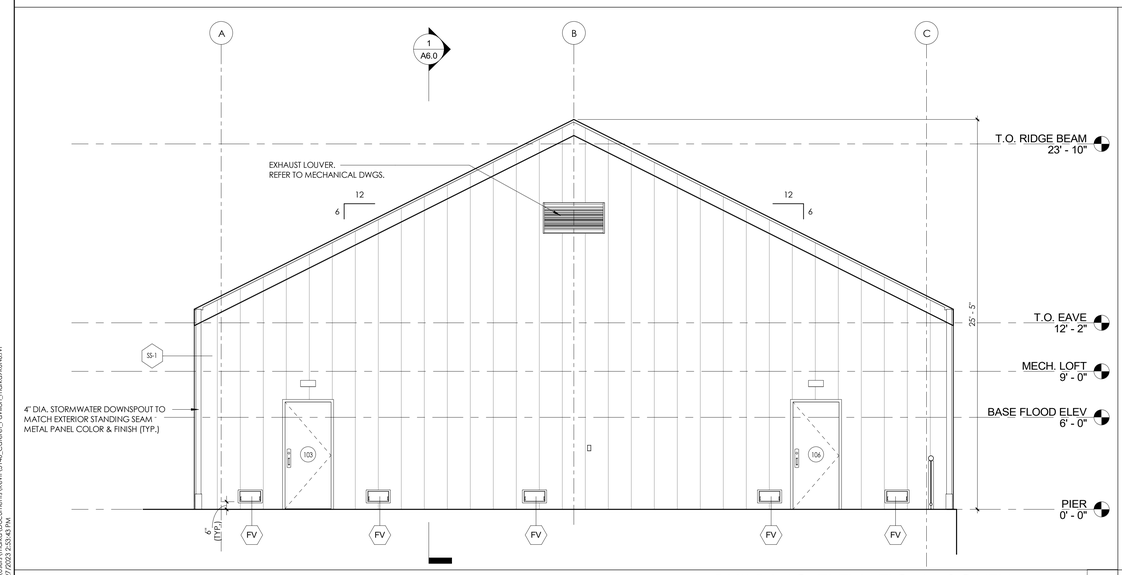

BUILDING ELEVATION - SOUTH 1/4" = 1'-0" 16

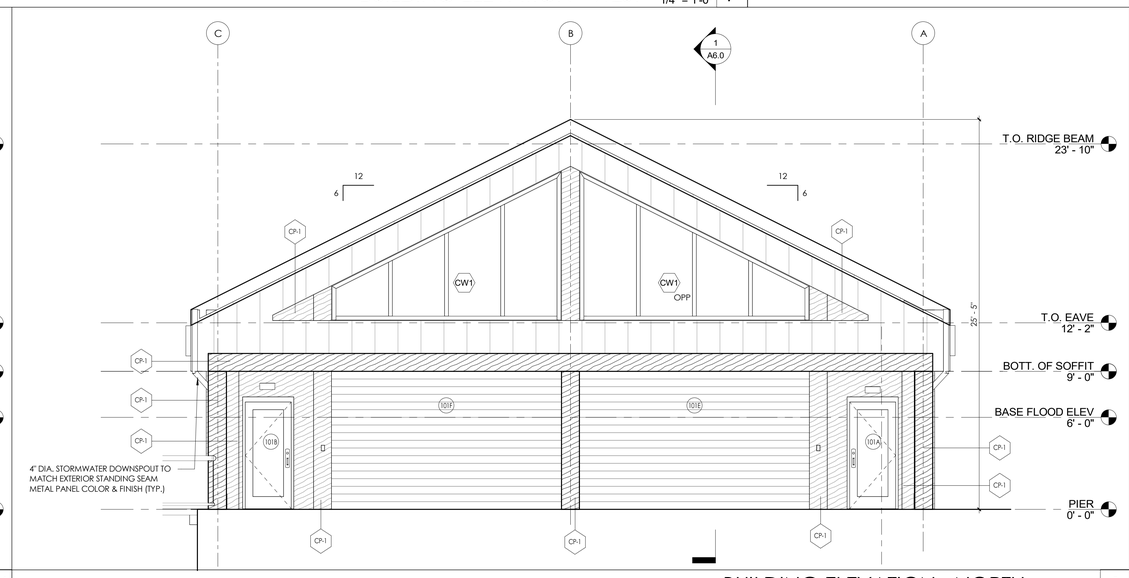

BUILDING ELEVATION - NORTH 1/4" = 1'-0" 1

Key Plan

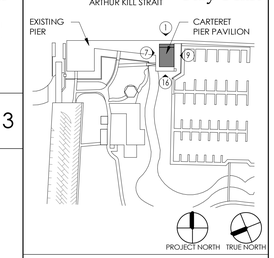

PROJECT

CARTERET PIER PAVILION

WATERFRONT PARK
200 MIDDLESEX AVENUE BLOCK 201 LOT 4
CARTERET, NEW JERSEY 07008

GEOTECHNICAL & STRUCTURAL ENGINEER

McLaren ENGINEERING GROUP

McLaren Technical Services, Inc.

530 Chestnut Ridge Road
Woodcliff Lake, New Jersey 07677
201.775.6000 | www.mgmclaren.com

MEP ENGINEER

KeRi ENGINEERING PC

911 SPRINGFIELD ROAD, SUITE 2
UNION, NEW JERSEY 07083
973.866.5374
INFO@KERIENGINEERING.COM

FOOD SERVICE DESIGN CONSULTANT

RAYMOND/RAYMOND ASSOCIATES
FOOD SERVICE CONSULTANTS SINCE 1938

44 ST. JOHN STREET
GOSHEN, NEW YORK
845.360.5112
INFO@RRADESIGNS.COM

DMR
ARCHITECTURE
PLANNING
ENGINEERING
INTERIORS
CONSULTING
www.dmrarchitects.com

MEMBERS OF THE AMERICAN INSTITUTE OF ARCHITECTS

LLOYD A. ROSENBERG	NJ - AI 05526
KURT A. VIERHEILIG	NJ - AI 17809
PRADEEP KAPOOR	NY - 042197
FERNANDO ROBLEDO	NY - 033804
JANET PINI	NJ - AI 02102900

NOT VALID FOR BIDDING UNLESS SIGNED AND SEALED BY ARCHITECT

777 Terrace Avenue, 6th Floor
Hasbrouck Heights, New Jersey 07604
Tel 201 - 288 - 2600 || Fax 201 - 288 - 2662

NCARB NATIONAL COUNCIL OF ARCHITECTURAL REGISTRATION BOARDS

CO - 306 184 CT - 05438 NJ - AI 05526
NJ-BOARD OF PROFESSIONAL PLANNERS) - LI 01584
NY - 013025-1 PA - RA - 13437-B

DWG

EXTERIOR ELEVATIONS

SCALE As indicated

DATE	DESCRIPTION	DRN	CHK
06/29/2023	BID SET	JC/MD	DG

REV.	DATE	DESCRIPTION

PROJECT NO.	SHEET NO.
5146	A5.0

Copyright © 2023 by DMR PLOT DATE: 6/27/2023 2:53:43 PM

C:\Users\marks\Documents\Revit\5146_Carteret_Pavilion_marksRK6NL.rvt
6/27/2023 2:53:43 PM

1. THE TERM "FINISHED FLOOR" WHERE INDICATED ON INTERIOR ELEVATIONS, FINISH DETAILS AND MILLWORK DETAILS REFER TO THE NOMINAL FINISHED FLOOR LEVEL OF THAT FLOOR UNLESS OTHERWISE NOTED.
2. ALL MILLWORK AND CABINETRY SHALL BE FABRICATED TO THE "PREMIUM" GRADE STANDARDS LISTED IN SECTION 10 OF THE "ARCHITECTURAL WOODWORK STANDARDS" OF THE AMERICAN WOODWORK INSTITUTE, UNLESS OTHERWISE NOTED IN THE SPECIFICATIONS.
3. DIMENSIONS ON INTERIOR ELEVATIONS, FINISH DETAILS AND MILLWORK DETAILS ARE SHOWN TO FINISHED FACE OF WALL, UNLESS OTHERWISE NOTED. CONTRACTOR TO VERIFY AT ALL LOCATIONS, ESPECIALLY WHERE MILLWORK ABUTS EXISTING CONSTRUCTION.
4. ALL MILLWORK CONSTRUCTION TO BE 1/2" MARINE GRADE PLYWOOD AND PRESSURE TREATED LUMBER.
5. ALL MILLWORK SCREWS, NAILS, BOLTS, CLIPS ETC. USED TO BE 316 STAINLESS STEEL.
6. EXPOSED PARTS ARE DEFINED AS SURFACES VISIBLE WHEN:
   - A. DRAWER FRONTS AND DOORS ARE CLOSED;
   - B. CABINETS AND SHELVING ARE OPEN TYPE;
   - C. BOTTOMS OF CABINETS ARE SEEN 42" OR MORE ABOVE FINISHED FLOOR;
   - D. PORTIONS OF CABINETS ARE VISIBLE AFTER FIXED APPLIANCES ARE INSTALLED;
   - E. FRONT EDGES OF CABINET BODY MEMBERS ARE VISIBLE OR SEEN THROUGH A GAP GREATER THAN 1/8" WITH DOORS AND DRAWERS CLOSED.
7. SEMI-EXPOSED PARTS ARE DEFINED AS VISIBLE SURFACES WHEN:
   - A. DRAWERS AND DOORS ARE IN THE OPEN POSITION;
   - B. BOTTOMS OF CABINETS ARE BETWEEN 30" AND 42" ABOVE THE FINISH FLOOR;
   - C. ALL FRONT EDGES OF SHELVING BEHIND DOORS.
8. CONCEALED SURFACES ARE DEFINED AS:
   - A. SURFACES ARE NOT VISIBLE AFTER INSTALLATION;
   - B. BOTTOMS OF CABINETS ARE LESS THAN 30" ABOVE THE FINISHED FLOOR.
   - C. STRETCHERS, BLOCKING AND/OR COMPONENTS ARE CONCEALED BY DRAWERS.
9. ALL OPEN SPACE SIZES AND KNEE BRACE LOCATIONS TO BE VERIFIED WITH EQUIPMENT TO BE INSTALLED AND ACTUAL ROOM DIMENSIONS.
10. ALL EXPOSED CORNERS OF COUNTERTOPS SHALL HAVE 1" RADIUS CORNERS, UNLESS OTHERWISE NOTED.
11. AT CUTOUTS AND L SHAPED COUNTERTOPS, ALL INSIDE CORNERS TO BE SMOOTHLY ROUNDED WITH A MINIMUM CORNER RADIUS OF 1/2", UNLESS OTHERWISE NOTED.
12. ALL FINISHED END PANELS ARE BASE CABINETS TO BE ONE CONTINUOUS PANEL INCLUDING BASE.
13. SEE DRAWINGS FOR TYPICAL MOUNTING HEIGHTS OF WALL MOUNTED EQUIPMENT AND DEVICES.
14. PROVIDE PRESSURE TREATED WOOD BLOCKING IN WALLS, FLOORING OR BELOW PIER DECKING AS SHOWN AND SPECIFIED FOR ALL WALL MOUNTED CASEWORK, SHELVING, WALL PANELS, FURNITURE, HEATERS, SIGNAGE, LADDERS, FIRE EXTINGUISHER CABINETS, DOOR STOPS, FLOOR STOPS, FLOOR DRAINS, ETC.
15. VERIFY ALL DIMENSIONS WITH CASEWORK LOCATIONS AND FINAL EQUIPMENT AND FIXTURE SELECTIONS.
16. WALL MOUNTED DEVICES OR GROUPS OF DEVICES WHICH EXTEND, SWING OR MOVE [I.E. SCAVENGER ARM] AND ARE INDICATED [ON PLAN] TO BE BETWEEN EQUIPMENT OR CASEWORK SHALL BE INSTALLED AT 1/3" EQUAL SPACING, NOT VERTICALLY ALIGNED.
17. FAUCETS SHALL BE CENTERED ON SINK UNLESS OTHERWISE NOTED.

INTERIOR ELEVATION NOTES | 5

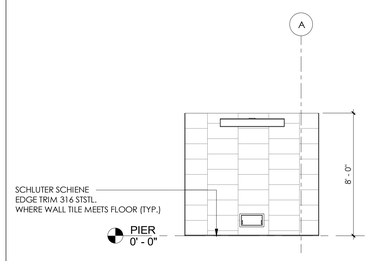

ENTRY 100 ELEVATION 1/4" = 1'-0" | 8

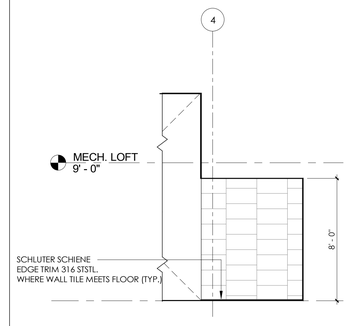

ENTRY 100 ELEVATION 1/4" = 1'-0" | 7

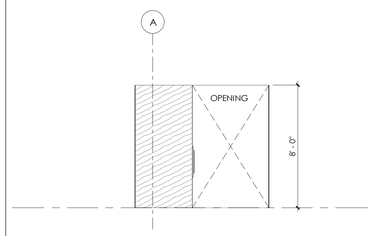

ENTRY 100 ELEVATION 1/4" = 1'-0" | 6

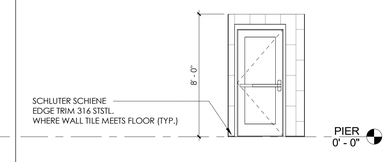

ENTRY 100 ELEVATION 1/4" = 1'-0" | 5

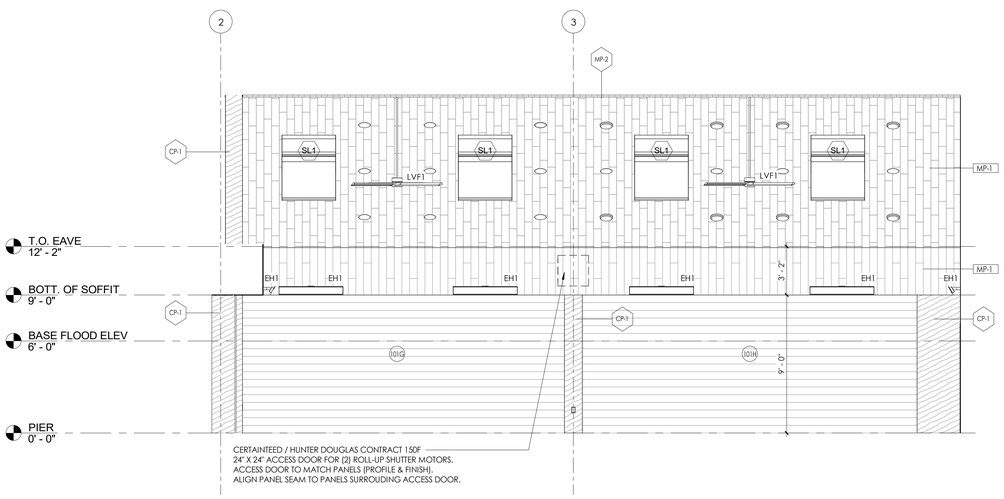

DINING 101 ELEVATION 1/4" = 1'-0" | 4

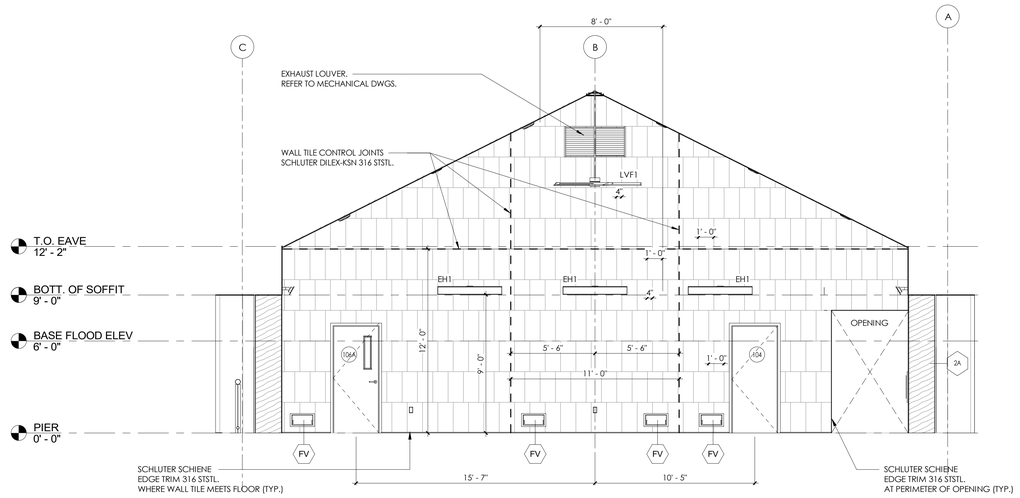

DINING 101 ELEVATION 1/4" = 1'-0" | 2

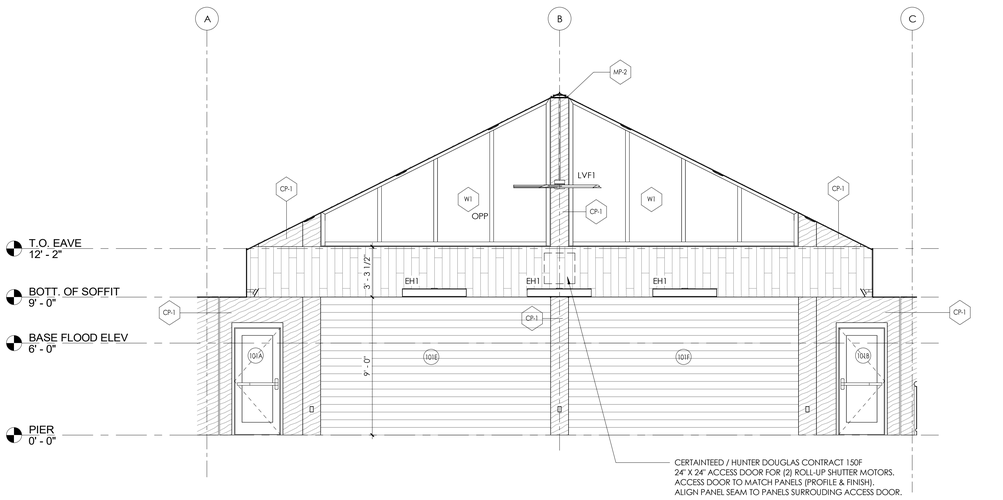

DINING 101 ELEVATION 1/4" = 1'-0" | 3

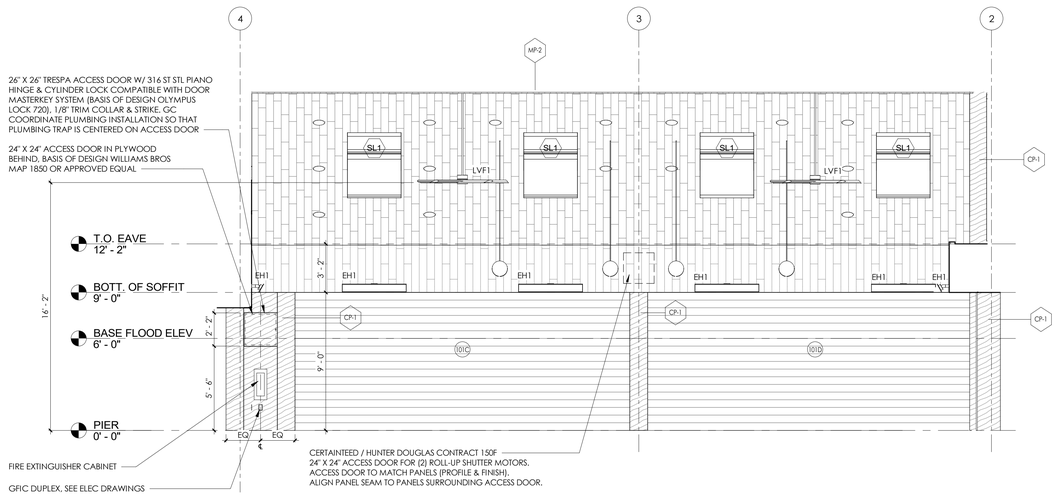

DINING 101 ELEVATION 1/4" = 1'-0" | 1

Key Plan

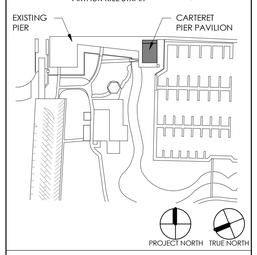

PROJECT

CARTERET PIER PAVILION

WATERFRONT PARK
200 MIDDLESEX AVENUE BLOCK 201 LOT 4
CARTERET, NEW JERSEY 07008

GEOTECHNICAL & STRUCTURAL ENGINEER
McLaren ENGINEERING GROUP
McLaren Technical Services, Inc.
530 Chestnut Ridge Road
Woodcliff Lake, New Jersey 07677
201.775.6000 | www.mgmclaren.com

MEP ENGINEER
KeRi ENGINEERING PC
911 SPRINGFIELD ROAD, SUITE 2
UNION, NEW JERSEY 07083
973.866.5374
INFO@KERIENGINEERING.COM

FOOD SERVICE DESIGN CONSULTANT
RAYMOND/RAYMOND ASSOCIATES
FOOD SERVICE CONSULTANTS SINCE 1938
44 ST. JOHN STREET
GOSHEN, NEW YORK
845.360.5112
INFO@RRADESIGNS.COM

DMR
ARCHITECTURE
PLANNING
ENGINEERING
INTERIORS
CONSULTING
www.dmrarchitects.com

MEMBERS OF THE AMERICAN INSTITUTE OF ARCHITECTS

LLOYD A. ROSENBERG	NJ - AI 05526
KURT A. VIERHEILIG	NJ - AI 17809
PRADEEP KAPOOR	NY - 042197
FERNANDO ROBLEDO	NY - 033804
JANET PINI	NJ - AI 02102900

NOT VALID FOR BUILDING UNLESS SIGNED AND SEALED BY ARCHITECT

777 Terrace Avenue, 6th Floor
Hasbrouck Heights, New Jersey 07604
Tel 201 - 288 - 2600 || Fax 201 - 288 - 2662

NCARB NATIONAL COUNCIL OF ARCHITECTURAL REGISTRATION BOARDS

CO - 306 184 CT - 05438 NJ - AI 05526
NJ-BOARD OF PROFESSIONAL PLANNERS) - LI 01584
NY - 013023-1 PA - RA - 13437-B

DWG.

INTERIOR ELEVATIONS

SCALE: As indicated

DATE	DESCRIPTION	DRN	CHK
06/26/2023	BID SET	JC/MD	DG

REV.	DATE	DESCRIPTION

PROJECT NO.	SHEET NO.
5146	A5.1

Copyright © 2023 by DMR

PLOT DATE: 6/27/2023 2:53:47 PM

C:\Users\mdrdt\Documents\Revit\5146_Carteret_Pavilion_mdrdtPR62R6.rvt
6/27/2023 2:53:47 PM

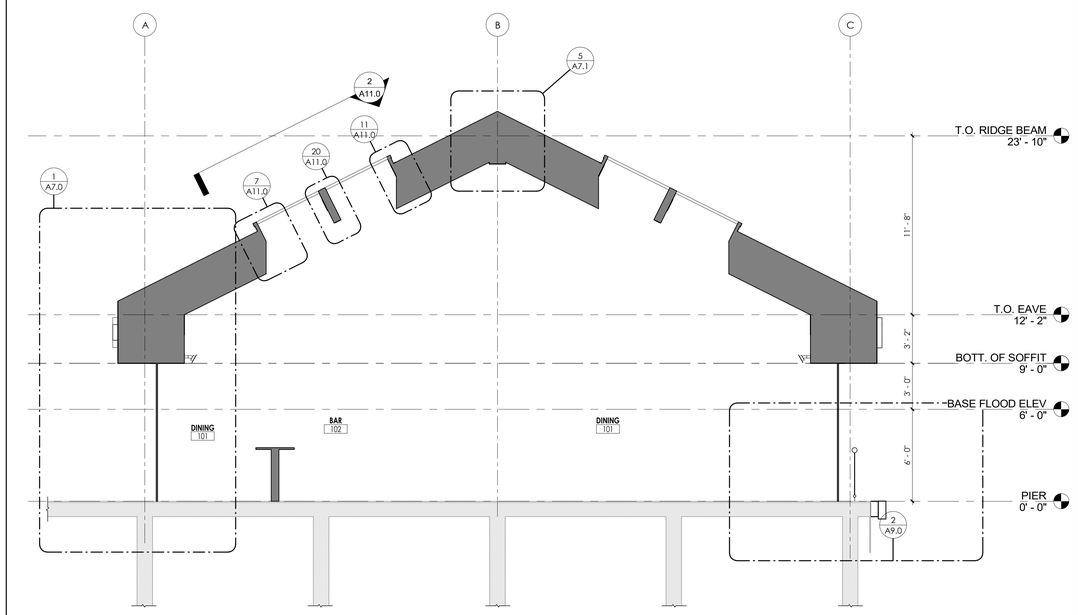

CROSS SECTION @ DINING AREA 1/4" = 1'-0" 18

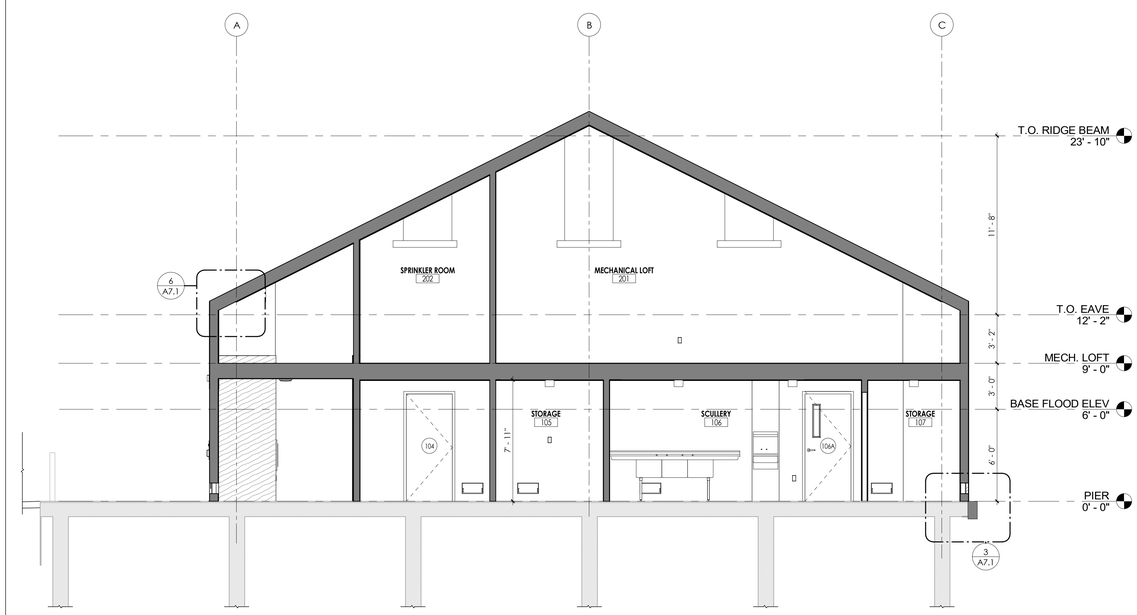

CROSS SECTION @ ATTIC 1/4" = 1'-0" 3

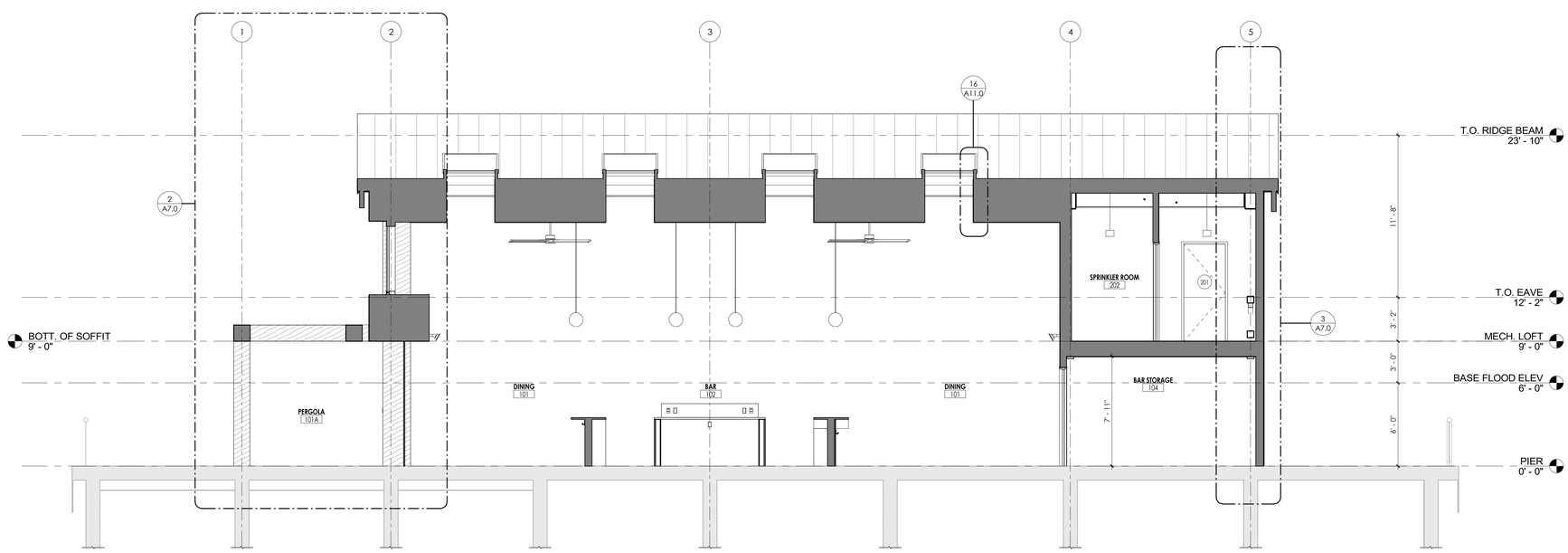

PAVILION LONGITUDINAL SECTION 1/4" = 1'-0" 1

Key Plan

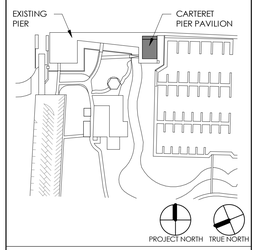

PROJECT

CARTERET PIER PAVILION

WATERFRONT PARK
200 MIDDLESEX AVENUE BLOCK 201 LOT 4
CARTERET, NEW JERSEY 07008

GEOTECHNICAL & STRUCTURAL ENGINEER

McLaren ENGINEERING GROUP
McLaren Technical Services, Inc.
530 Chestnut Ridge Road
Woodcliff Lake, New Jersey 07677
201.775.6000 | www.mgmclaren.com

MEP ENGINEER

KeRi ENGINEERING PC
911 SPRINGFIELD ROAD, SUITE 2
UNION, NEW JERSEY 07083
973.866.5374
INFO@KERIENGINEERING.COM

FOOD SERVICE DESIGN CONSULTANT

RAYMOND/RAYMOND ASSOCIATES
FOOD SERVICE CONSULTANTS SINCE 1938
44 ST. JOHN STREET
GOSHEN, NEW YORK
845.360.5112
INFO@RRADESIGNS.COM

DMR
ARCHITECTURE
PLANNING
ENGINEERING
INTERIORS
CONSULTING
www.dmrarchitects.com

MEMBERS OF THE AMERICAN INSTITUTE OF ARCHITECTS

LLOYD A. ROSENBERG	NJ - AI 05526
KURT A. VIERHEILIG	NJ - AI 17809
PRADEEP KAPOOR	NY - 042197
FERNANDO ROBLEDO	NY - 033804
JANET PINI	NJ - AI 02102900

NOT VALID FOR BIDDING UNLESS SIGNED AND SEALED BY ARCHITECT

777 Terrace Avenue, 6th Floor
Hasbrouck Heights, New Jersey 07604
Tel 201 - 288 - 2600 || Fax 201 - 288 - 2662

NCARB NATIONAL COUNCIL OF ARCHITECTURAL REGISTRATION BOARDS

CO - 306 184 CT - 05438 NJ - AI 05526
NJ-BOARD OF PROFESSIONAL PLANNERS) - LI 01584
NY - 013025-1 PA - RA - 13437-B

DWG

PAVILION SECTIONS

SCALE As indicated

DATE	DESCRIPTION	DRN	CHK
06/28/2023	BID SET	JC/MD	DG

REV.	DATE	DESCRIPTION

PROJECT NO.	SHEET NO.
5146	A6.0

Copyright © 2023 by DMR

PLOT DATE: 6/27/2023 2:53:48 PM

C:\Users\marks\Documents\Revit\5146_Carteret_Pavilion_marksRK&NL.rvt
6/27/2023 2:53:48 PM

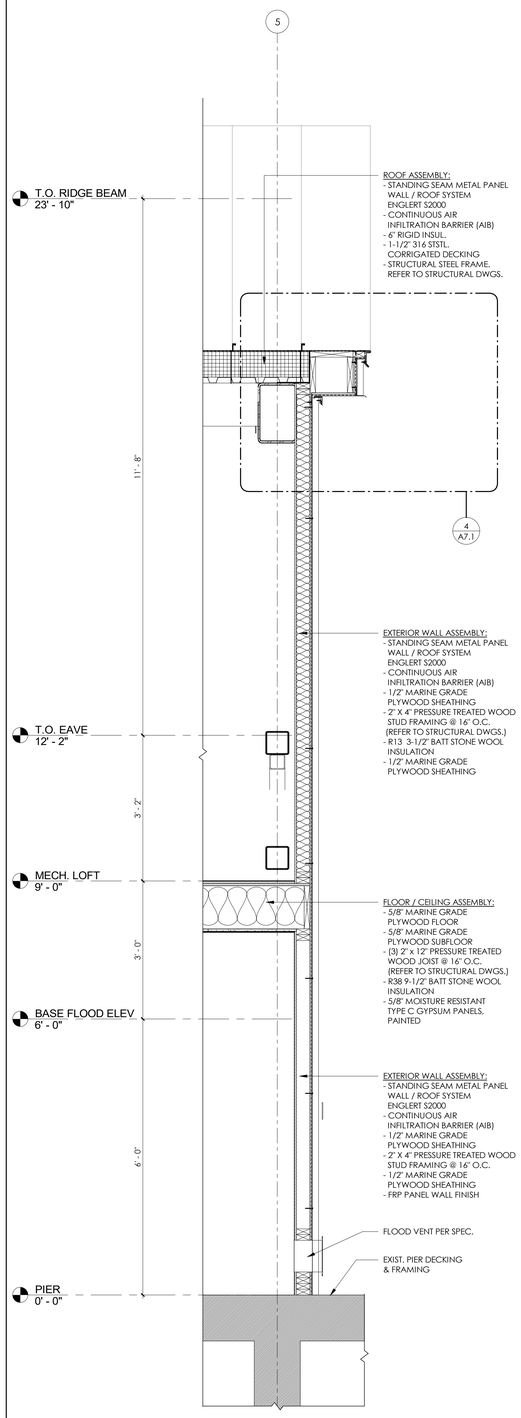

WALL SECTION @ BACK OF HOUSE 3/4" = 1'-0" 3

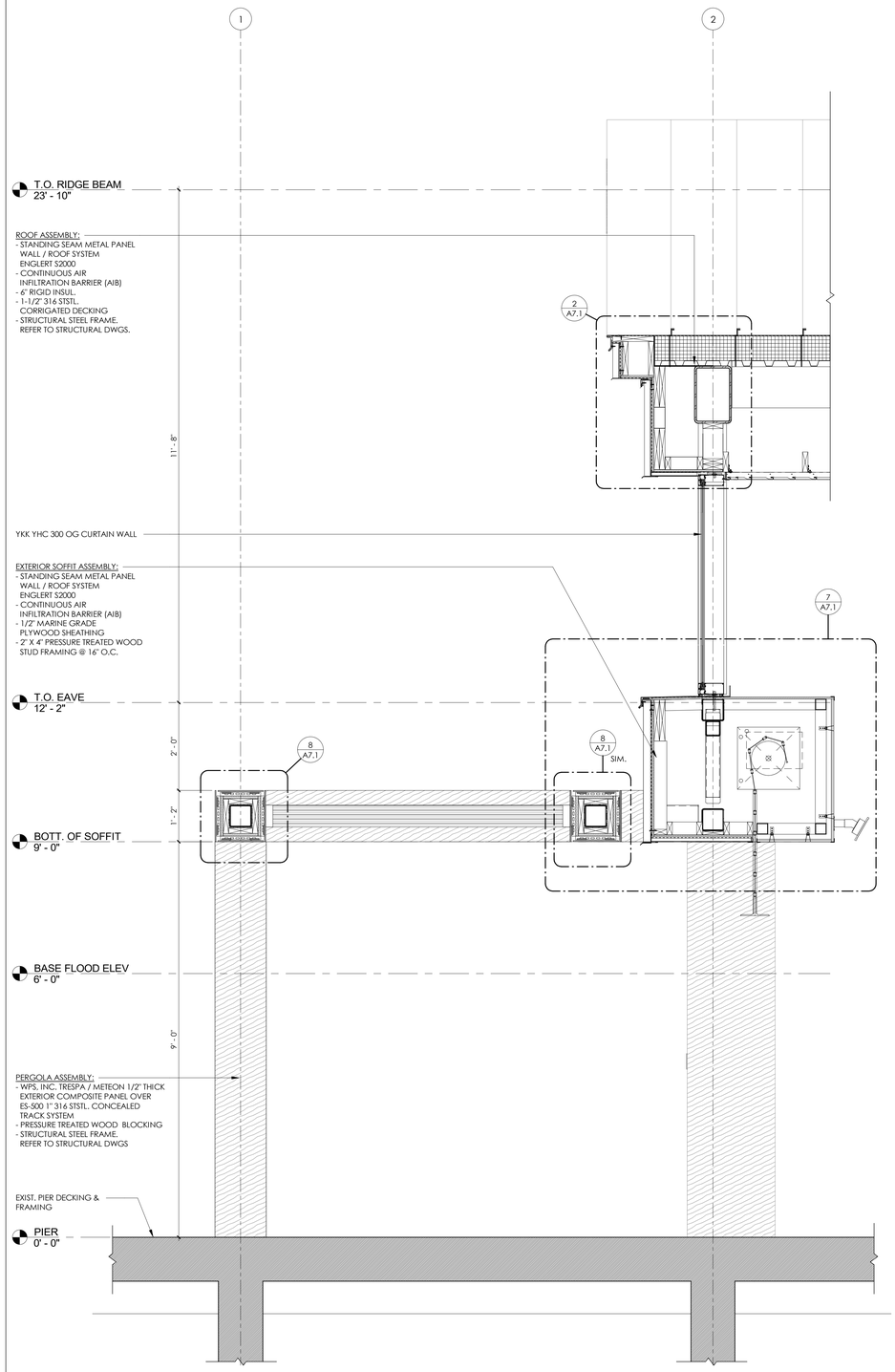

WALL SECTION @ PERGOLA 3/4" = 1'-0" 2

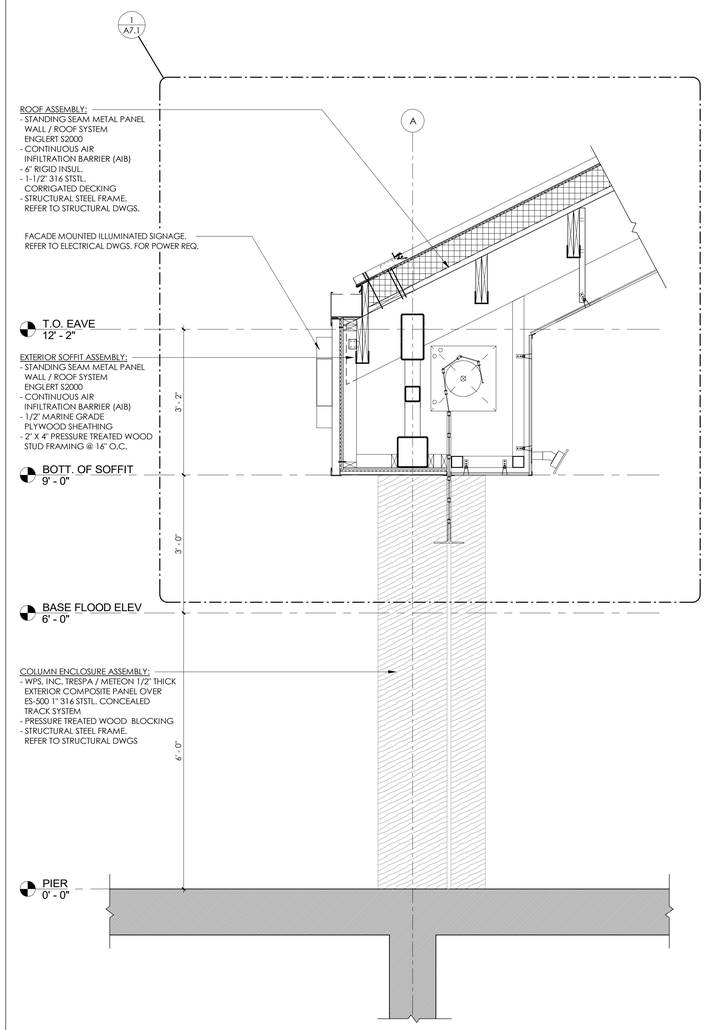

WALL SECTION @ DINING AREA 3/4" = 1'-0" 1

Key Plan

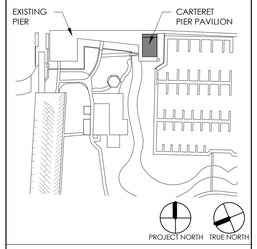

PROJECT

CARTERET PIER PAVILION

WATERFRONT PARK
200 MIDDLESEX AVENUE BLOCK 201 LOT 4
CARTERET, NEW JERSEY 07008

GEOTECHNICAL & STRUCTURAL ENGINEER

McLaren ENGINEERING GROUP

McLaren Technical Services, Inc.
530 Chestnut Ridge Road
Woodcliff Lake, New Jersey 07677
201.775.6000 | www.mgmclaren.com

MEP ENGINEER

KeRi ENGINEERING PC

911 SPRINGFIELD ROAD, SUITE 2
UNION, NEW JERSEY 07083
973.866.5374
INFO@KERIENGINEERING.COM

FOOD SERVICE DESIGN CONSULTANT

RAYMOND/RAYMOND ASSOCIATES
FOOD SERVICE CONSULTANTS SINCE 1938

44 ST. JOHN STREET
GOSHEN, NEW YORK
845.360.5112
INFO@RRADESIGNS.COM

DMR
ARCHITECTURE
PLANNING
ENGINEERING
INTERIORS
CONSULTING
www.dmrarchitects.com

MEMBERS OF THE AMERICAN INSTITUTE OF ARCHITECTS

LLOYD A. ROSENBERG	NJ - AI 05526
KURT A. VIERHEILIG	NJ - AI 17809
PRADEEP KAPOOR	NY - 042197
FERNANDO ROBLEDO	NY - 033804
JANET PINI	NJ - AI 02102900

NOT VALID FOR BIDDING UNLESS SIGNED AND SEALED BY ARCHITECT

777 Terrace Avenue, 6th Floor
Hasbrouck Heights, New Jersey 07604
Tel 201 - 288 - 2600 || Fax 201 - 288 - 2662

NCARB NATIONAL COUNCIL OF ARCHITECTURAL REGISTRATION BOARDS

CO - 306 184 CT - 05438 NJ - AI 05526
NJ-BOARD OF PROFESSIONAL PLANNERS) - LI 01584
NY - 013023-1 PA - RA - 13437-B

DWG

WALL SECTIONS

SCALE As indicated

DATE	DESCRIPTION	DRN	CHK
06/26/2023	BID SET	JC/MD	DG

REV.	DATE	DESCRIPTION		

PROJECT NO.	SHEET NO.
5146	A7.0

Copyright © 2023 by DMR

PLOT DATE: 6/27/2023 2:53:50 PM

C:\Users\marsh\Documents\Revit\5146_Carteret_Pavilion_marsh2R14d.rvt
6/27/2023 2:53:51 PM

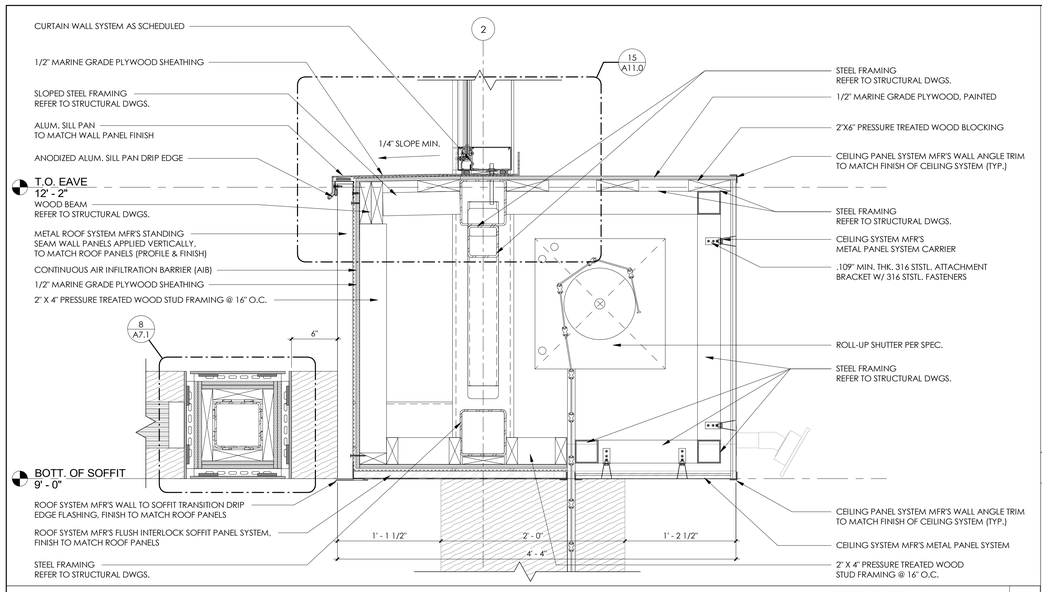

SOFFIT DETAIL 1 1/2" = 1'-0" 7

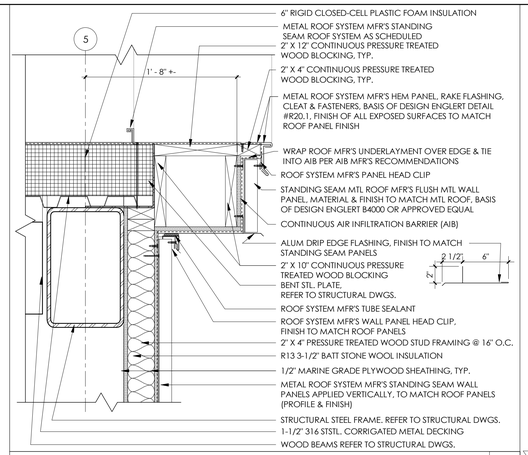

RAKE @ BACK OF HOUSE DETAIL 1 1/2" = 1'-0" 4

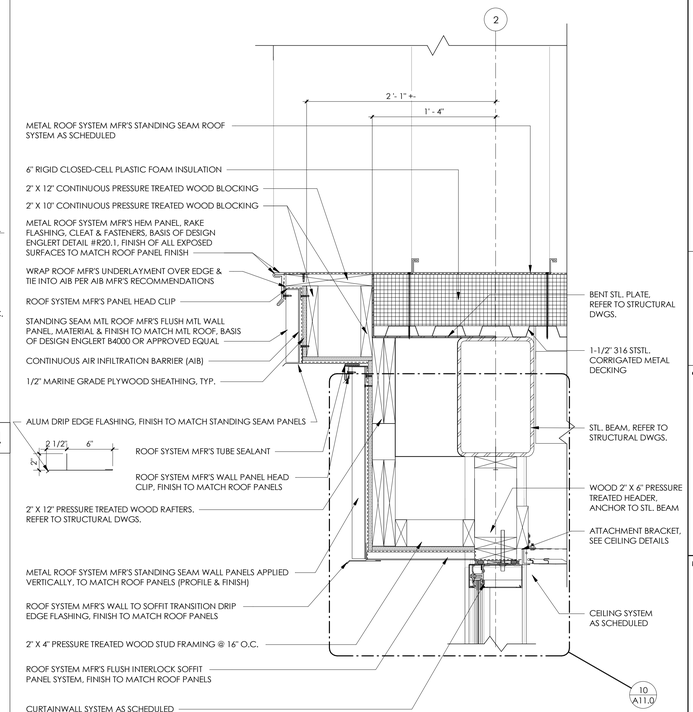

RAKE OVER CURTAINWALL DETAIL 1 1/2" = 1'-0" 2

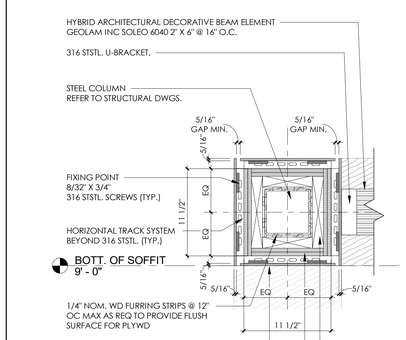

TYP. PERGOLA BEAM ENCL. DETAIL 1 1/2" = 1'-0" 8

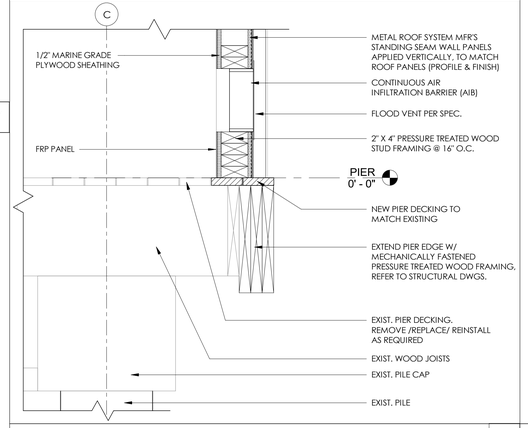

PIER EDGE @ BACK OF HOUSE DETAIL 1 1/2" = 1'-0" 3

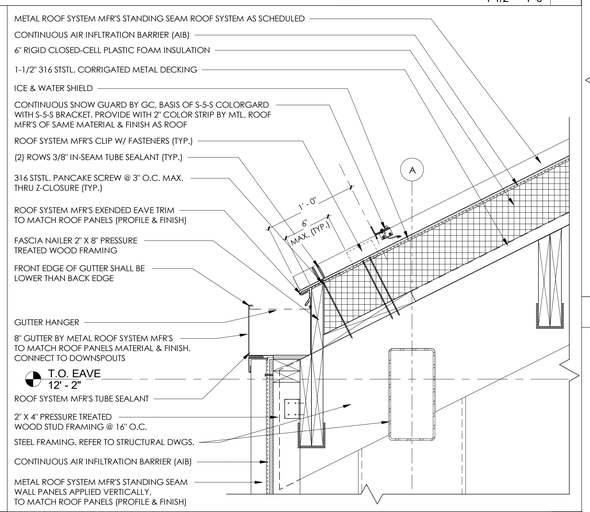

EAVE @ BACK OF HOUSE DETAIL 1 1/2" = 1'-0" 6

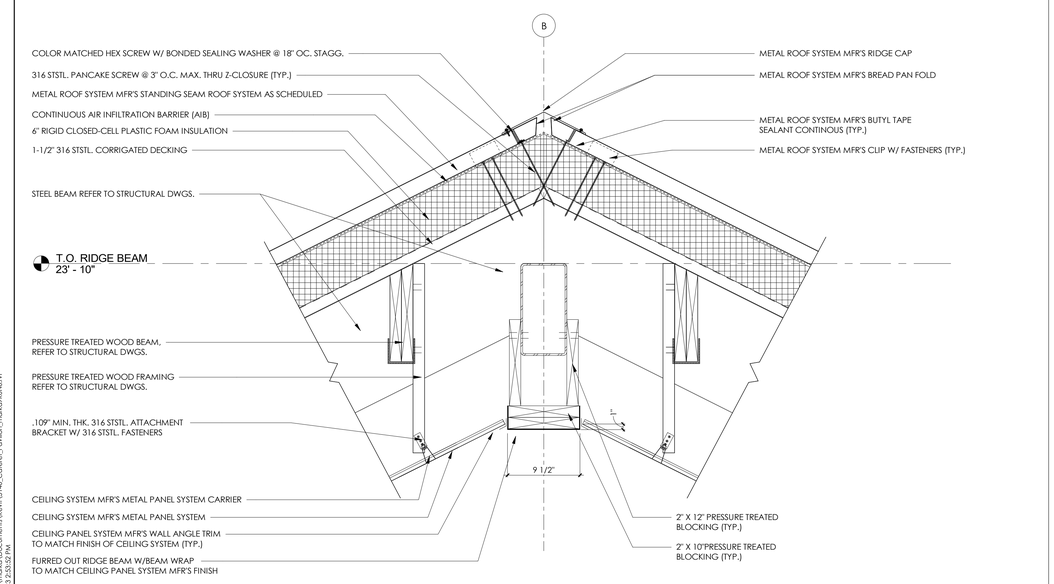

ROOF RIDGE DETAIL 1 1/2" = 1'-0" 5

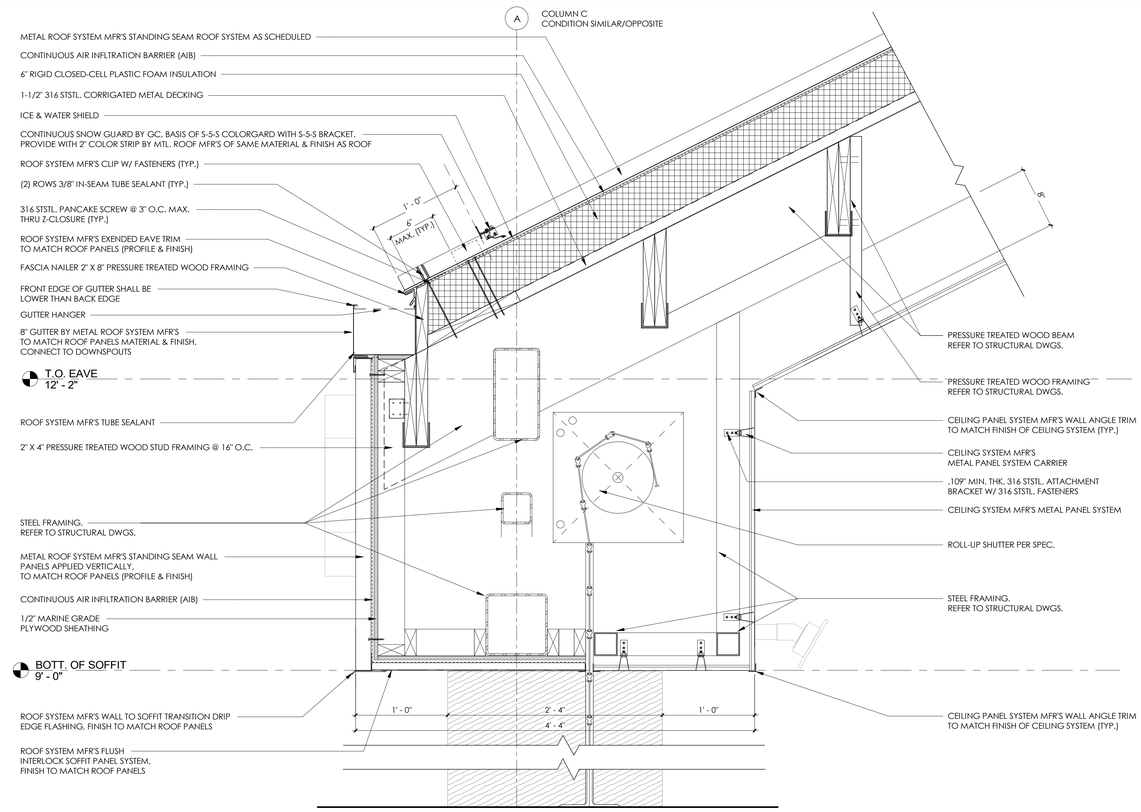

ROOF EAVE / SOFFIT DETAIL 1 1/2" = 1'-0" 1

Key Plan

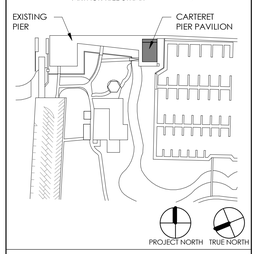

PROJECT

CARTERET PIER PAVILION

WATERFRONT PARK
200 MIDDLESEX AVENUE BLOCK 201 LOT 4
CARTERET, NEW JERSEY 07008

GEOTECHNICAL & STRUCTURAL ENGINEER

McLaren ENGINEERING GROUP
McLaren Technical Services, Inc.
530 Chestnut Ridge Road
Woodcliff Lake, New Jersey 07677
201.775.6000 | www.mgmclaren.com

MEP ENGINEER

KeRi ENGINEERING PC
911 SPRINGFIELD ROAD, SUITE 2
UNION, NEW JERSEY 07083
973.866.5374
INFO@KERIENGINEERING.COM

FOOD SERVICE DESIGN CONSULTANT

RAYMOND/RAYMOND ASSOCIATES
FOOD SERVICE CONSULTANTS SINCE 1938
44 ST. JOHN STREET
GOSHEN, NEW YORK
845.360.5112
INFO@RRADESIGNS.COM

DMR
ARCHITECTURE
PLANNING
ENGINEERING
INTERIORS
CONSULTING
www.dmrarchitects.com

MEMBERS OF THE AMERICAN INSTITUTE OF ARCHITECTS

LLOYD A. ROSENBERG	NJ - AI 05526
KURT A. VIERHEILIG	NJ - AI 17809
PRADEEP KAPOOR	NY - 042197
FERNANDO ROBLEDO	NY - 033804
JANET PINI	NJ - AI 02102900

NOT VALID FOR BIDDING UNLESS SIGNED AND SEALED BY ARCHITECT
777 Terrace Avenue, 6th Floor
Hasbrouck Heights, New Jersey 07604
Tel 201 - 288 - 2600 || Fax 201 - 288 - 2662

NCARB NATIONAL COUNCIL OF ARCHITECTURAL REGISTRATION BOARDS
CO - 306 184 CT - 05438 NJ - AI 05526
NJ-BOARD OF PROFESSIONAL PLANNERS) - LI 01584
NY - 013025-1 PA - RA - 13437-B

DWG

SECTION DETAILS

SCALE: As indicated

DATE	DESCRIPTION	DRN	CHK
06/26/2023	BID SET	JCMD	DG

REV.	DATE	DESCRIPTION

PROJECT NO. 5146

SHEET NO. A7.1

Copyright © 2023 by DMR

PLOT DATE: 6/27/2023 2:53:52 PM

C:\Users\mcaro\Documents\Revit\5146_Carteret_Pavilion_mcaroR2416.rvt
6/27/2023 2:53:52 PM

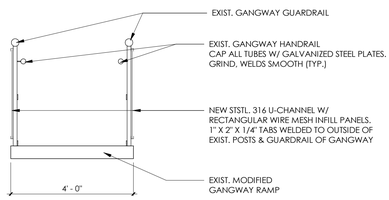

GANGWAY GUARDRAIL SECTION DETAIL 1/2" = 1'-0" 8

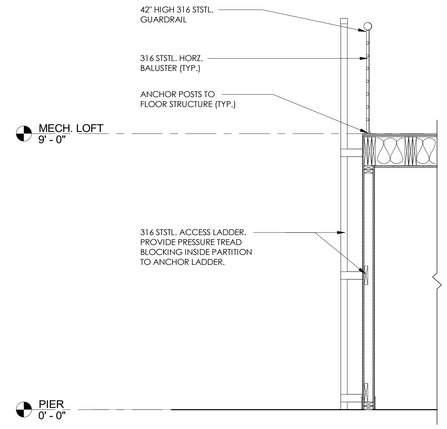

MECH. LOFT GUARDRAIL SECTION DETAIL 1/2" = 1'-0" 4

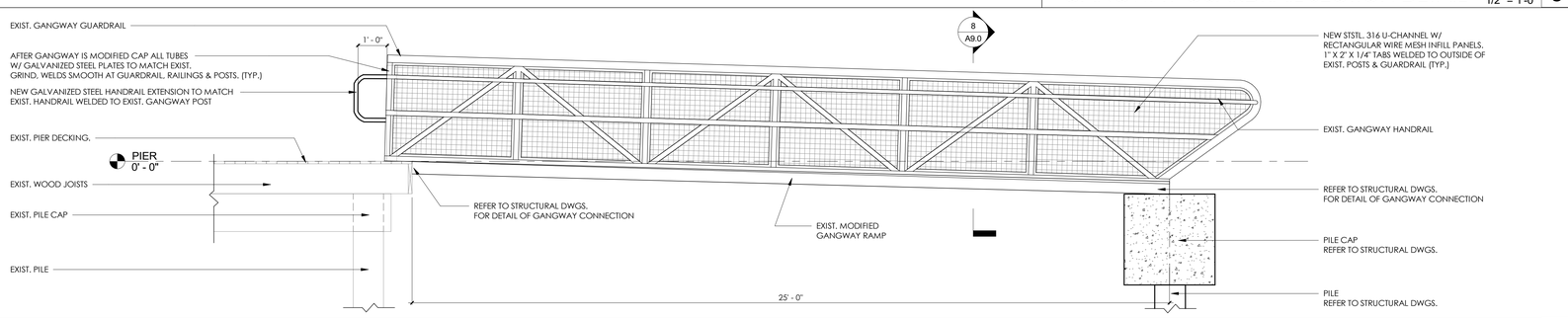

GANGWAY GUARDRAIL & RAILING ELEVATION 2 1/2" = 1'-0" 7

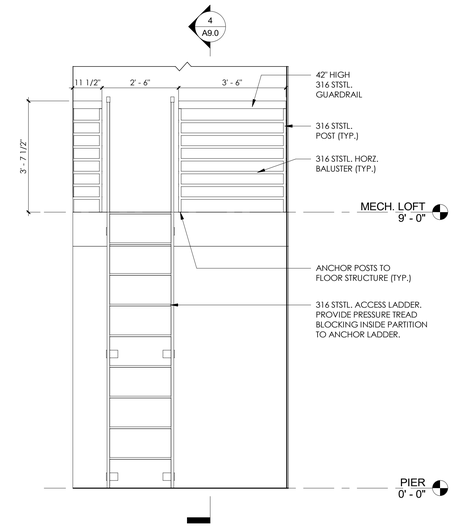

MECH. LOFT GUARDRAIL ELEVATION 1/2" = 1'-0" 3

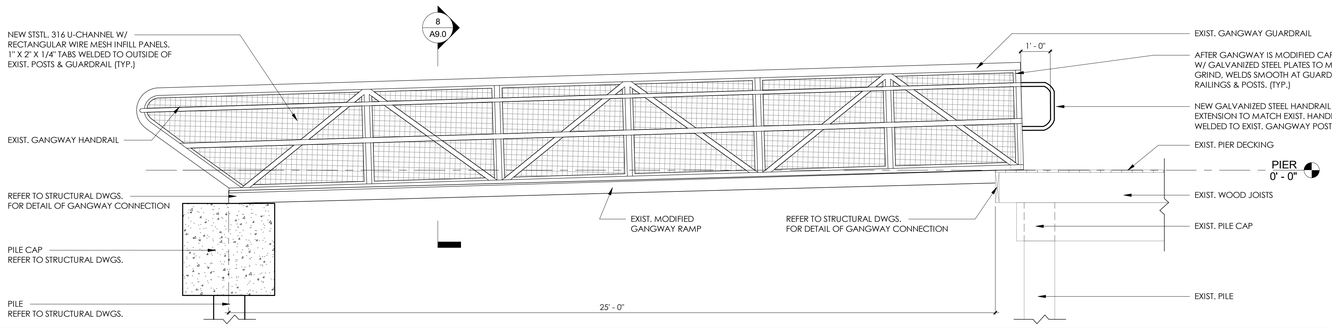

GANGWAY GUARDRAIL & RAILING ELEVATION 1 1/2" = 1'-0" 6

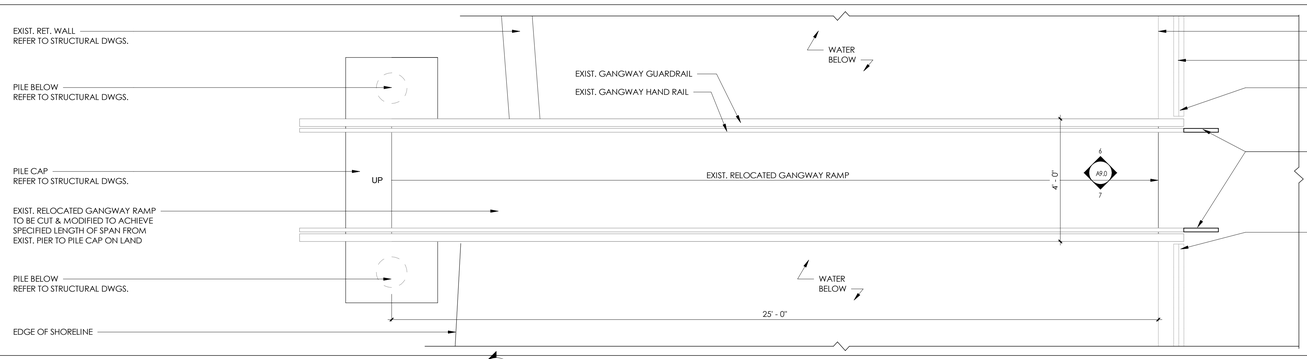

NOTE:
GANGWAY PLATFORM SLOPE TO BE 1:12 MAX.
ADJUST PILE CAP ELEVATION TO ACHIEVE SLOPE.

ENLARGED GANGWAY RAMP PLAN 1/2" = 1'-0" 5

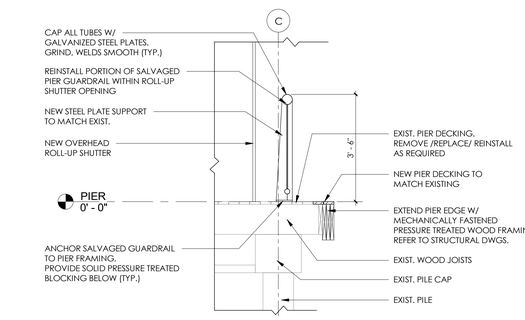

GUARDRAIL SECTION DETAIL @ DINING AREA 1/2" = 1'-0" 2

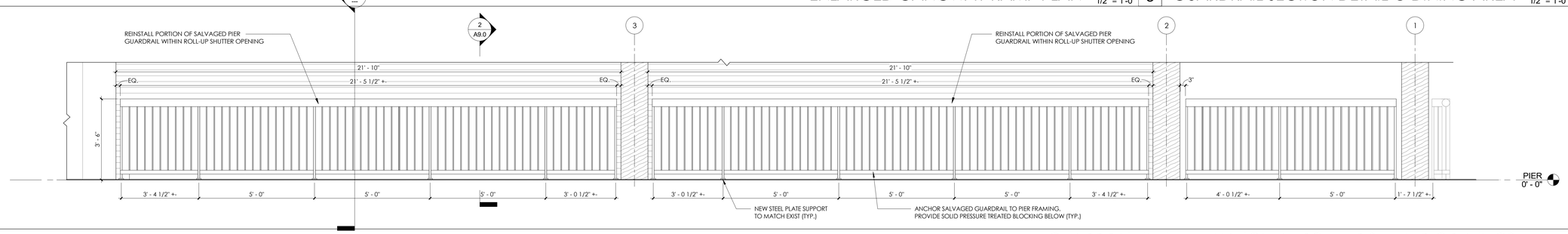

GUARDRAIL INFILL ELEVATION AT ROLL-UP SHUTTER OPENINGS 1/2" = 1'-0" 1

C:\Users\mcnic\Documents\Revit\5146_Carteret_Pavilion_nicholRVA16.rvt
6/27/2023 2:53:54 PM

Key Plan

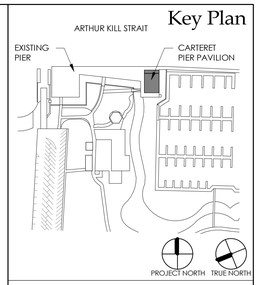

PROJECT
CARTERET PIER PAVILION

WATERFRONT PARK
200 MIDDLESEX AVENUE BLOCK 201 LOT 4
CARTERET, NEW JERSEY 07008

GEOTECHNICAL & STRUCTURAL ENGINEER
McLaren ENGINEERING GROUP
McLaren Technical Services, Inc.
530 Chestnut Ridge Road
Woodcliff Lake, New Jersey 07677
201.775.6000 | www.mgmclaren.com

MEP ENGINEER
KeRi ENGINEERING PC
911 SPRINGFIELD ROAD, SUITE 2
UNION, NEW JERSEY 07083
973.866.5374
INFO@KERIENGINEERING.COM

FOOD SERVICE DESIGN CONSULTANT
RAYMOND/RAYMOND ASSOCIATES
FOOD SERVICE CONSULTANTS SINCE 1938
44 ST. JOHN STREET
GOSHEN, NEW YORK
845.360.5112
INFO@RRADESIGNS.COM

DMR
ARCHITECTURE
PLANNING
ENGINEERING
INTERIORS
CONSULTING
www.dmrarchitects.com

MEMBERS OF THE AMERICAN INSTITUTE OF ARCHITECTS

LLOYD A. ROSENBERG	NJ - AI 05526
KURT A. VIERHEILIG	NJ - AI 17809
PRADEEP KAPOOR	NY - 042197
FERNANDO ROBLEDO	NY - 033804
JANET PINI	NJ - AI 02102900

NOT VALID FOR BIDDING UNLESS SIGNED AND SEALED BY ARCHITECT
777 Terrace Avenue, 6th Floor
Hasbrouck Heights, New Jersey 07604
Tel 201 - 288 - 2600 || Fax 201 - 288 - 2662

NCARB NATIONAL COUNCIL OF ARCHITECTURAL REGISTRATION BOARDS
CO - 306 184 CT - 05438 NJ - AI 05526
NJ-BOARD OF PROFESSIONAL PLANNERS) - LI 01584
NY - 013025-1 PA - RA - 13437-B

DWG
GUARDRAIL ELEVATIONS & DETAILS

SCALE As indicated

DATE	DESCRIPTION	DRN	CHK
06/26/2023	BID SET	JC/MD	DG

REV.	DATE	DESCRIPTION

PROJECT NO.	SHEET NO.
5146	A9.0

Copyright © 2023 by DMR PLOT DATE: 6/27/2023 2:53:54 PM

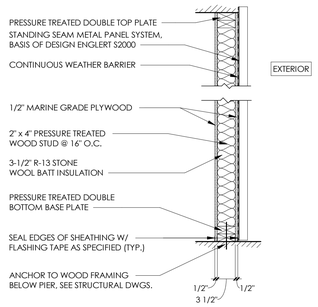

EXTERIOR WALL TYPE 7C 1" = 1'-0" 20

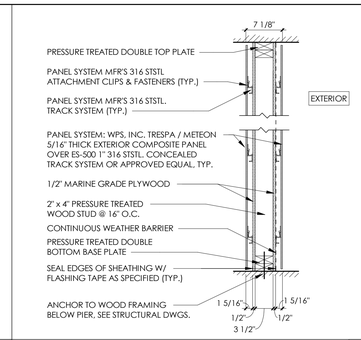

EXTERIOR WALL TYPE 6 1" = 1'-0" 15

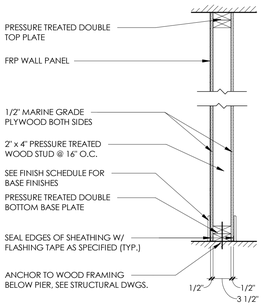

WALL PARTITION TYPE 3B 1" = 1'-0" 10

1. ALL WOOD FRAMING TO BE PRESSURE TREATED THROUGHOUT WITH DEPTH AS NOTED IN PARTITION SCHEDULE AND ON STRUCTURAL DRAWINGS, UNLESS OTHERWISE NOTED.
2. ALL WOOD SHEATHING TO BE 1/2" MARINE GRADE PLYWOOD UNLESS OTHERWISE NOTED.
3. ALL WOOD FRAMING ATTACHMENT SCREWS, NAILS, BOLTS, CLIPS ETC. TO BE 316 STAINLESS STEEL THROUGHOUT.
4. PROVIDE DIAGONAL BRACING IN SOFFITS OR ABOVE CEILING, AS INDICATED IN STRUCTURAL DETAILS, OR AS REQUIRED TO ACHIEVE SPECIFIED DEFLECTION AND LATERAL LOAD CRITERIA.
5. ALL WOOD STUDS SHALL BE SPACED 16" ON CENTER MAXIMUM, UNLESS OTHERWISE NOTED.
6. SPECIES AND SPACING AS REQUIRED TO MEET SPAN AND DEFLECTION REQUIREMENTS (L/360).
7. CONTRACTOR SHALL FURNISH AND INSTALL SOLID PRESSURE TREATED BLOCKING AT ALL PARTITION WALLS AS REQUIRED TO SUPPORT ALL WALL HUNG ITEMS INCLUDING EQUIPMENT, MILLWORK, ACCESSORIES, FURNITURE, ETC. THIS INCLUDES WALL MOUNTED ITEMS SCHEDULED AS TO BE INSTALLED BY THE CONTRACTOR AND WALL MOUNTED ITEMS SCHEDULED AS TO BE INSTALLED BY OWNER. REFER TO INTERIOR ELEVATIONS, FURNITURE, AND EQUIPMENT PLANS AND COORDINATE WITH OWNER AND OWNER'S IT, EQUIPMENT AND FURNITURE VENDORS.
8. PROVIDE PRESSURE TREADTED WOOD BLOCKING FOR ALL FLOOR DRAINS.

FRAMING NOTES 5

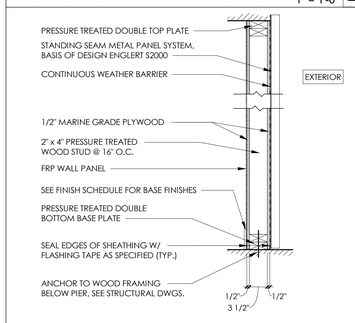

EXTERIOR WALL TYPE 7B 1" = 1'-0" 19

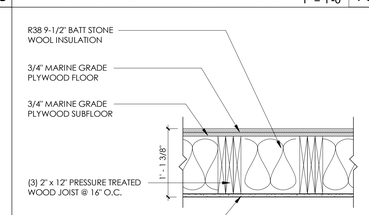

WOOD FLOOR ASSEMBLY 1" = 1'-0" 14

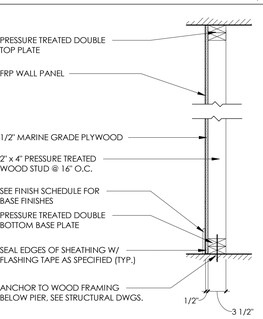

WALL PARTITION TYPE 3A 1" = 1'-0" 9

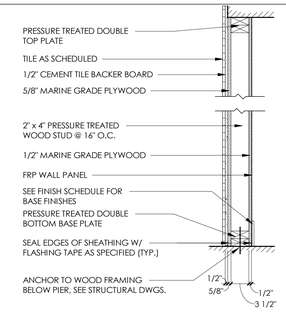

WALL PARTITION TYPE 1C 1" = 1'-0" 4

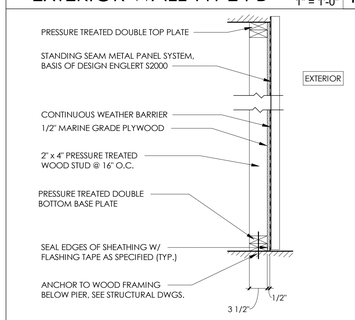

EXTERIOR WALL TYPE 7A 1" = 1'-0" 18

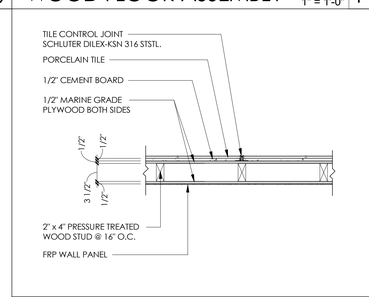

WALL TILE CONTROL JOINT PLAN DETAIL 1" = 1'-0" 13

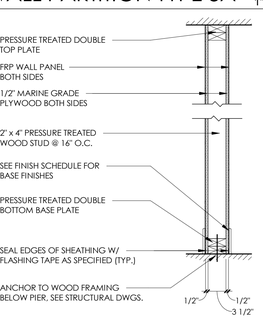

WALL PARTITION TYPE 3 1" = 1'-0" 8

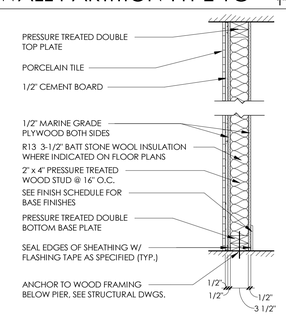

WALL PARTITION TYPE 1B 1" = 1'-0" 3

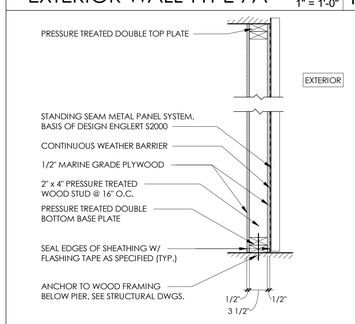

EXTERIOR WALL TYPE 7 1" = 1'-0" 17

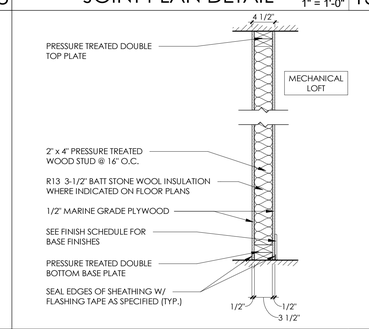

WALL PARTITION TYPE 4B 1" = 1'-0" 12

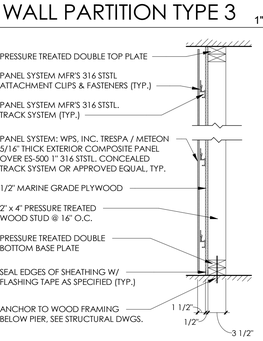

WALL PARTITION TYPE 2A 1" = 1'-0" 7

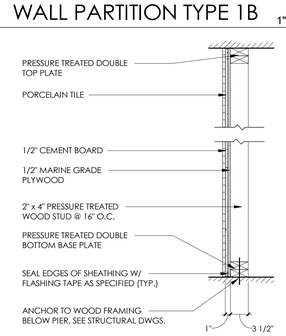

WALL PARTITION TYPE 1A 1" = 1'-0" 2

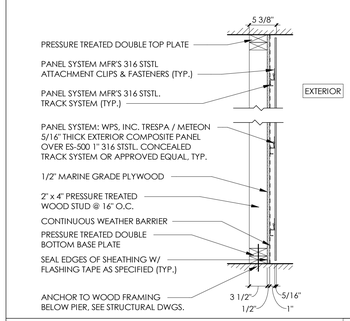

EXTERIOR WALL TYPE 6A 1" = 1'-0" 16

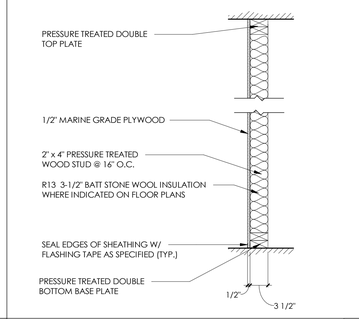

WALL PARTITION TYPE 4A 1" = 1'-0" 11

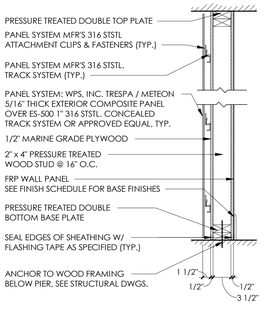

WALL PARTITION TYPE 2 1" = 1'-0" 6

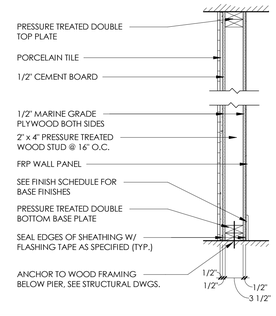

WALL PARTITION TYPE 1 1" = 1'-0" 1

Key Plan

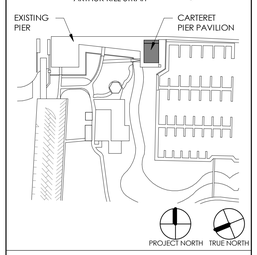

PROJECT

CARTERET PIER PAVILION

WATERFRONT PARK
200 MIDDLESEX AVENUE BLOCK 201 LOT 4
CARTERET, NEW JERSEY 07008

GEOTECHNICAL & STRUCTURAL ENGINEER

McLaren ENGINEERING GROUP
McLaren Technical Services, Inc.
530 Chestnut Ridge Road
Woodcliff Lake, New Jersey 07677
201.775.6000 | www.mgmclaren.com

MEP ENGINEER

KeRi ENGINEERING PC
911 SPRINGFIELD ROAD, SUITE 2
UNION, NEW JERSEY 07083
973.866.5374
INFO@KERIENGINEERING.COM

FOOD SERVICE DESIGN CONSULTANT

RAYMOND/RAYMOND ASSOCIATES
FOOD SERVICE CONSULTANTS SINCE 1938
44 ST. JOHN STREET
GOSHEN, NEW YORK
845.360.5112
INFO@RRADESIGNS.COM

DMR
ARCHITECTURE
PLANNING
ENGINEERING
INTERIORS
CONSULTING
www.dmrarchitects.com

MEMBERS OF THE AMERICAN INSTITUTE OF ARCHITECTS

LLOYD A. ROSENBERG	NJ - AI 05526
KURT A. VIERHEILIG	NJ - AI 17809
PRADEEP KAPOOR	NY - 042197
FERNANDO ROBLEDO	NY - 033804
JANET PINI	NJ - AI 02102900

NOT VALID FOR BIDDING UNLESS SIGNED AND SEALED BY ARCHITECT

777 Terrace Avenue, 6th Floor
Hasbrouck Heights, New Jersey 07604
Tel 201 - 288 - 2600 || Fax 201 - 288 - 2662

NCARB NATIONAL COUNCIL OF ARCHITECTURAL REGISTRATION BOARDS

CO - 306 184 CT - 05438 NJ - AI 05526
NJ-BOARD OF PROFESSIONAL PLANNERS) - LI 01584
NY - 013025-1 PA - RA - 13437-B

DWG

EXTERIOR WALL & PARTITION TYPES

SCALE As indicated

DATE	DESCRIPTION	DRN	CHK
06/28/2023	BID SET	JC/MD	DG

REV.	DATE	DESCRIPTION

PROJECT NO.	SHEET NO.
5146	A10.0

Copyright © 2023 by DMR PLOT DATE: 6/27/2023 2:53:56 PM

C:\Users\mcarol\Documents\Revit\5146_Carteret_Pavilion_mark.rvt
6/27/2023 2:53:56 PM

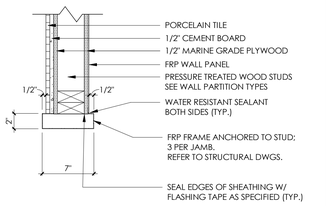

DOOR HEAD DETAIL H-7 1 1/2" = 1'-0" 27

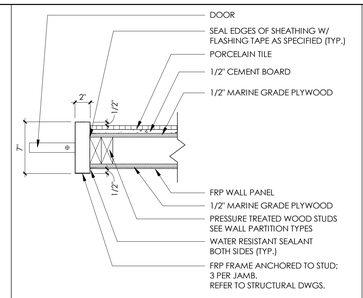

DOOR JAMB DETAIL J-7 1 1/2" = 1'-0" 23

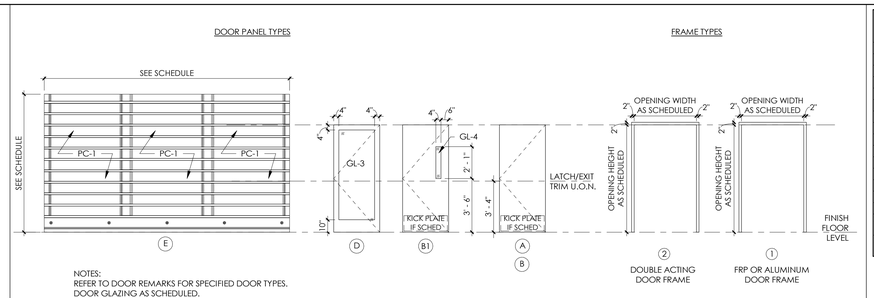

NOTES:
REFER TO DOOR REMARKS FOR SPECIFIED DOOR TYPES.
DOOR GLAZING AS SCHEDULED.

DOOR & FRAME LEGEND 1/4" = 1'-0" 14

	FRAMED OPENING				DOOR					FRAME				FIRE RATING (MINUTES)		
DOOR NO.	FROM ROOM	TO ROOM	WIDTH	HT	THK	TYPE	MAT'L	GL TYPE	TYPE	MAT'L	HEAD	JAMB	HDW SET		REMARKS
101	ENTRY 100	EXTERIOR	3' - 0"	7' - 0"	1 3/4"	D	AL	GL-3	1	AL	H-3	J-3	1	-	D
101A	DINING 101		3' - 0"	7' - 0"	1 3/4"	D	AL	GL-3	1	AL	H-1	J-1	1	-	D
101B		DINING 101	3' - 0"	7' - 0"	1 3/4"	D	AL	GL-3	1	AL	H-1	J-1	1	-	D
101C	EXTERIOR	DINING 101	21' - 10"	9' - 0"	1"	E	AL/PC	PC-1	-	-	-	-	2	-	E
101D	EXTERIOR	DINING 101	21' - 10"	9' - 0"	1"	E	AL/PC	PC-1	-	-	-	-	2	-	E
101E	DINING 101		15' - 0"	9' - 0"	1"	E	AL/PC	PC-1	-	-	-	-	2	-	E
101F		DINING 101	15' - 0"	9' - 0"	1"	E	AL/PC	PC-1	-	-	-	-	2	-	E
101G	EXTERIOR	DINING 101	21' - 10"	9' - 0"	1"	E	AL/PC	PC-1	-	-	-	-	2	-	E
101H	EXTERIOR	DINING 101	21' - 10"	9' - 0"	1"	E	AL/PC	PC-1	-	-	-	-	2	-	E
103	MECHANICAL 103	EXTERIOR	3' - 0"	7' - 0"	1 3/4"	A	FRP/AL	-	1	AL	H-2	J-2	3	-	A
104	BAR STORAGE 104	DINING 101	3' - 0"	7' - 0"	1 3/4"	B	FRP	-	1	FRP	H-4	J-4	4	-	B
105	SCULLERY 106	STORAGE 105	3' - 0"	7' - 0"	1 3/4"	B	FRP	-	1	FRP	H-5	J-5	4A	-	B
106	SCULLERY 106	EXTERIOR	3' - 0"	7' - 0"	1 3/4"	A	FRP/AL	-	1	AL	H-2	J-2	5	-	A
106A	DINING 101	SCULLERY 106	3' - 0"	7' - 0"	1 3/4"	B1	FRP	GL-4	2	FRP	H-7	J-7	6	-	B
107	SCULLERY 106	STORAGE 107	3' - 0"	7' - 0"	1 3/4"	B	FRP	-	1	FRP	H-5	J-5	4A	-	B
201	MECHANICAL LOFT 201	MECHANICAL ACCESS 200	3' - 0"	7' - 0"	1 3/4"	B	FRP	-	1	FRP	H-6	J-6	8	-	B
202	MECHANICAL ACCESS 200	SPRINKLER ROOM 202	3' - 0"	7' - 0"	1 3/4"	B	FRP	-	1	FRP	H-6	J-6	7	-	B

REMARKS:
A: EXTERIOR INSULATED FRP DOOR & ALUMINUM FRAME, MAXIMUM U VALUE: 0.370, BASIS OF DESIGN SPECIAL-LITE SL-17 OR APPROVED EQUAL.
B: INTERIOR FRP DOOR & FRAME, BASIS OF DESIGN SPECIAL-LITE AF-217 OR APPROVED EQUAL.
C: NOT USED.
D: EXTERIOR STOREFRONT ENTRANCE DOOR & FRAME. BASIS OF DESIGN YKK AP MODEL 50H, MAXIMUM ASSEMBLY U-VALUE 0.77
E: OVERHEAD ROLLING SHUTTER, BASIS OF DESIGN OF DESIGN ALUMATEC PACIFIC PRODUCTS MODEL LXR-HC-E OR APPROVED EQUAL.

DOOR & FRAME SCHEDULE 5

Key Plan

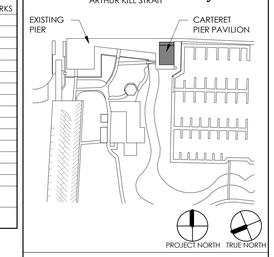

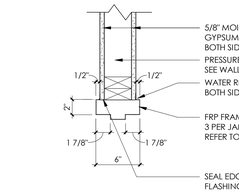

DOOR HEAD DETAIL H-6 1 1/2" = 1'-0" 26

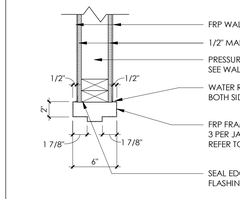

DOOR HEAD DETAIL H-5 1 1/2" = 1'-0" 22

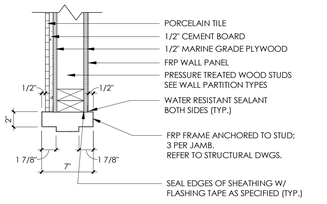

DOOR HEAD DETAIL H-4 1 1/2" = 1'-0" 18

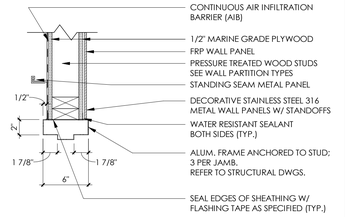

DOOR HEAD DETAIL H-3 1 1/2" = 1'-0" 13

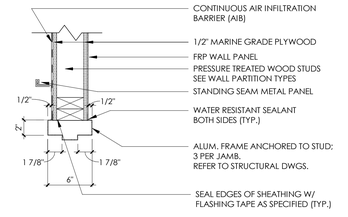

DOOR HEAD DETAIL H-2 1 1/2" = 1'-0" 9

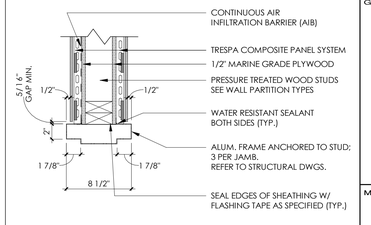

DOOR HEAD DETAIL H-1 1 1/2" = 1'-0" 4

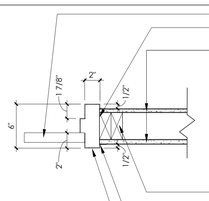

DOOR JAMB DETAIL J-6 1 1/2" = 1'-0" 25

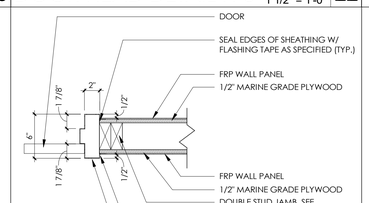

DOOR JAMB DETAIL J-5 1 1/2" = 1'-0" 21

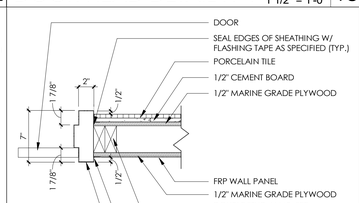

DOOR JAMB DETAIL J-4 1 1/2" = 1'-0" 17

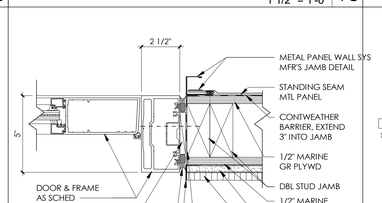

DOOR JAMB DETAIL J-3 3" = 1'-0" 12

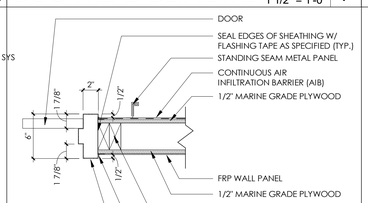

DOOR JAMB DETAIL J-2 1 1/2" = 1'-0" 8

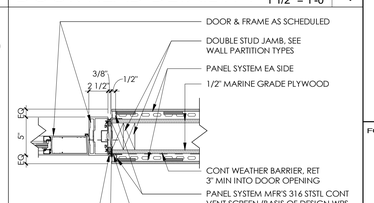

DOOR JAMB DETAIL J-1 1 1/2" = 1'-0" 3

1. ALL DOORS SHALL BE 1-3/4" THICK, UNLESS OTHERWISE NOTED.
2. DOOR FRAME THROAT SIZE VARIES BY PARTITION TYPE. SEE FLOOR PLANS & PARTITION TYPES FOR WIDTH.
3. DOOR NUMBERING MAY NOT BE SEQUENTIAL. DOORS GENERALLY NUMBERED TO MATCH ROOM NUMBERING.
4. ALL FRAMES SHALL BE CAULKED WITH MARINE GRADE SILICONE SEALANT CONTINUOUSLY TO WALL.
5. WHEREVER THERE IS A GAP LEFT BETWEEN THE BOTTOM OF DOOR FRAME AND THE FINISH FLOOR OF 1/4" OR LESS, THE CONTRACTOR SHALL PROVIDE MARINE GRADE CAULKING TO SEAL THE GAP. IF THE GAP IS LARGER THAN 1/4", THE FRAME SHALL BE REINSTALLED OR MODIFIED TO EXTEND TO THE FLOOR.
6. ALL HARDWARE FOR DOORS LOCATED IN RATED ASSEMBLIES SHALL COMPLY WITH NFPA STANDARD NO. 80, TESTED AND LISTED BY UL. ALL RATED DOORS AND FRAMES SHALL BE PROVIDED WITH FACTORY INSTALLED UL OR WARNOCK HERSEY LABELS INDICATING APPLICABLE FIRE CLASSIFICATION OF THE UNIT. DOORS SCHEDULED TO HAVE A FIRE RATING LABEL SHALL HAVE A METAL LABEL PERMANENTLY AFFIXED TO BOTH THE DOOR AND FRAME. A VINYL LABEL AND/OR EMBOSSED LABEL IN THE FRAME IS UNACCEPTABLE.
7. ALL INTERIOR DOORS WITH CLOSER OR OPERATOR SHALL HAVE CLOSERS OR OPERATORS ADJUSTED TO ALLOW MANUAL OPEN OF THE DOOR WITH 5 LB MAXIMUM PULL OR PUSH FORCE.
8. ALL FRAMES SHALL BE INSTALLED ACCORDING TO MANUFACTURERS RECOMMENDATIONS.
9. PROVIDE AND INSTALL DOOR STOPS AT ALL DOORS WHERE NO DOOR HOLD OPEN IS REQUIRED. PROVIDE SOLID PRESSURE TREATED WOOD BLOCKING AT ALL WALL AND FLOOR MOUNTED STOPS.
10. ALL INTERIOR DOORS SHALL BE UNDERCUT 5/8" UNLESS NOTED OTHERWISE.
11. PROVIDE ROCKWOOD 608 (SILENCERS) OR APPROVED EQUAL FOR ALL DOORS UNLESS OTHERWISE SPECIFIED OR UNLESS GASKETING IS SPECIFIED AS PART OF THE HARDWARE SET. PROVIDE (3) SILENCERS AT LATCH SIDE FOR SINGLE DOORS AND (2) SILENCERS AT HEAD FOR DOUBLE DOORS.
12. CONTRACTOR TO PROVIDE ALL WORK INVOLVED TO PREP DOORS/FRAMES FOR HARDWARE.
13. MANUFACTURER AND MODEL NUMBERS ARE LISTED ONLY TO INDICATE DEGREE OF QUALITY AND CODE CONFORMANCE. THE CONTRACTOR SHALL BE RESPONSIBLE FOR THE COMPATIBILITY OF THE SPECIFIED LOCK CORES WITH PROPOSED LOCKSET SUBSTITUTIONS.
14. ALL DOOR THRESHOLDS SHALL BE AUTHORITY HAVING JURISDICTION BARRIER FREE CODE COMPLIANT.
15. PROVIDE PRESSURE TREATED WOOD BLOCKING BELOW FLOOR DECKING FOR FLOOR MOUNTED PIVOT AT SCULLERY DOUBLE ACTING DOOR 106A.

DOOR & FRAME NOTES 24

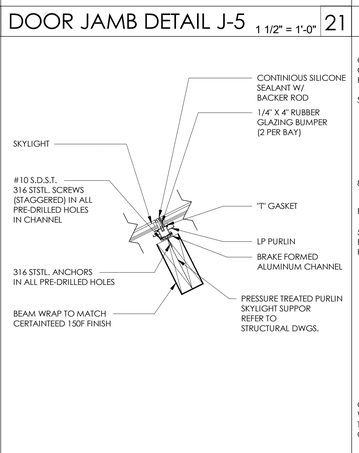

SKYLIGHT PURLIN DETAIL 1 1/2" = 1'-0" 20

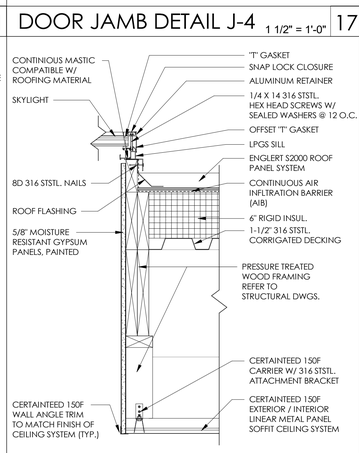

SKYLIGHT JAMB DETAIL 1 1/2" = 1'-0" 16

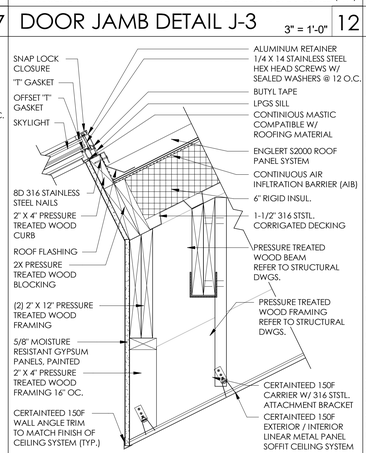

SKYLIGHT HEAD DETAIL 1 1/2" = 1'-0" 11

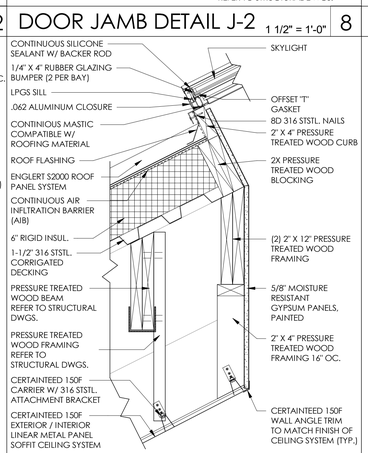

SKYLIGHT SILL DETAIL 1 1/2" = 1'-0" 7

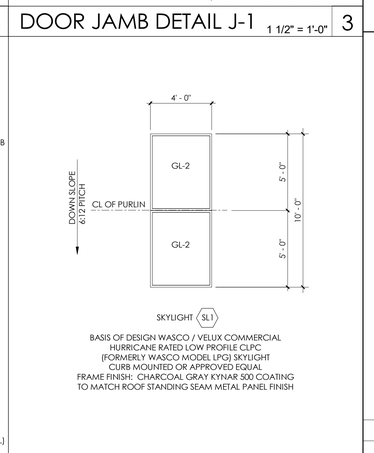

SKYLIGHT ELEVATION 1/4" = 1'-0" 2

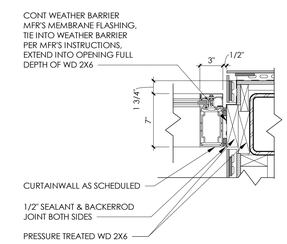

CW JAMB DETAIL 1 1/2" = 1'-0" 19

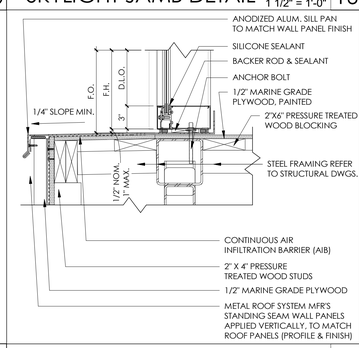

CW SILL DETAIL 1 1/2" = 1'-0" 15

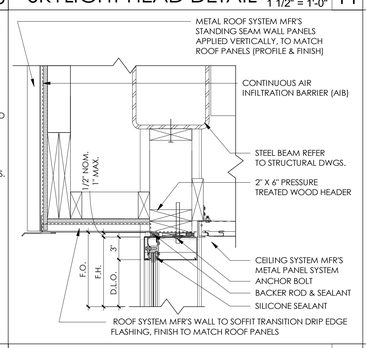

CW HEAD DETAIL 1 1/2" = 1'-0" 10

GL-1: 9/16" LAMINATED GLAZING WET SEALED TO FRAME:
- 1/4" HEAT STRENGTHENED GLASS
- 0.075" SAFLEX CP (VANCEVA COMPOSITES) PVB INTERLAYER BY 'EASTMAN' (SOLUTIA)
- 1/4" HEAT STRENGTHENED GLASS

GL-2: 1-3/16" INSULATED HURRICANE IMPACT RESISTANT GLASS W/ SB70 #2 CLEAR LOW E ARGON FILL

GL-3: 1" INSULATED LAMINATED GLASS:
- 3/16" FULLY TEMPERED GLASS
- 5/16" AIR SPACE
- 3/16" HEAT STRENGTHENED GLASS
- 0.075" VANCEVA STORM BY 'EASTMAN' (SOLUTIA)
- 3/16" HEAT STRENGTHENED GLASS

GL-4: 1/4" SAFETY GLAZING

PC-1: 3/32" CLEAR UV TREATED POLYCARBONATE SHUTTER WINDOW

GLAZING LEGEND 6

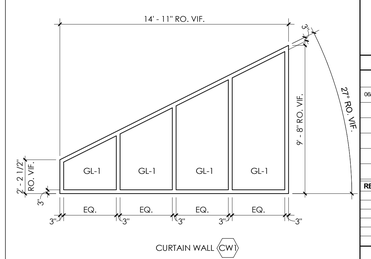

GLAZING ELEVATION 1/4" = 1'-0" 1

PROJECT
CARTERET PIER PAVILION
WATERFRONT PARK
200 MIDDLESEX AVENUE BLOCK 201 LOT 4
CARTERET, NEW JERSEY 07008

GEOTECHNICAL & STRUCTURAL ENGINEER
McLaren ENGINEERING GROUP
McLaren Technical Services, Inc.
530 Chestnut Ridge Road
Woodcliff Lake, New Jersey 07677
201.775.6000 | www.mgmclaren.com

MEP ENGINEER
KeRi ENGINEERING PC
911 SPRINGFIELD ROAD, SUITE 2
UNION, NEW JERSEY 07083
973.866.5374
INFO@KERIENGINEERING.COM

FOOD SERVICE DESIGN CONSULTANT
RAYMOND/RAYMOND ASSOCIATES
FOOD SERVICE CONSULTANTS SINCE 1938
44 ST. JOHN STREET
GOSHEN, NEW YORK
845.360.5112
INFO@RRADESIGNS.COM

DMR
ARCHITECTURE
PLANNING
ENGINEERING
INTERIORS
CONSULTING
www.dmrarchitects.com
MEMBERS OF THE AMERICAN INSTITUTE OF ARCHITECTS
LLOYD A. ROSENBERG NJ - AI 05526
KURT A. VIERHEILIG NJ - AI 17809
PRADEEP KAPOOR NY - 042197
FERNANDO ROBLEDO NY - 033804
JANET PINI NJ - AI 02102900
NOT VALID FOR BIDDING UNLESS SIGNED AND SEALED BY ARCHITECT
777 Terrace Avenue, 6th Floor
Hasbrouck Heights, New Jersey 07604
Tel 201 - 288 - 2600 || Fax 201 - 288 - 2662
NCARB NATIONAL COUNCIL OF ARCHITECTURAL REGISTRATION BOARDS
CO - 306.184 CT - 05438 NJ - AI 05526
NJ-BOARD OF PROFESSIONAL PLANNERS - LI 01584
NY - 013025-1 PA - RA - 13437-B

DWG
DOOR TYPES, DOOR SCHEDULE, GLAZING ELEVATIONS & DETAILS

SCALE: As indicated

DATE	DESCRIPTION	DRN	CHK
06/26/2023	BID SET	JC/MD	DG

REV.	DATE	DESCRIPTION

PROJECT NO. 5146
SHEET NO. A11.0

Copyright © 2023 by DMR
PLOT DATE: 6/27/2023 2:53:59 PM

C:\Users\matko\Documents\Revit\5146_Carteret_Pavilion_matkoR24.rvt
6/27/2023 2:53:59 PM

FINISH SCHEDULE

ROOM NUMBER	ROOM NAME	WALL FINISH NORTH	WALL FINISH EAST	WALL FINISH SOUTH	WALL FINISH WEST	FLOOR FINISH	BASE FINISH	COMMENTS
100	ENTRY	CP-1	PT-1	PT-1	PT-1	EXIST.		
101	DINING	CP-1	CP-1	PT-1	CP-1	EXIST.		
101A	PERGOLA	CP-1	CP-1	CP-1	CP-1	EXIST.		
102	BAR					EXIST.		SEE ELEVATIONS
103	MECHANICAL	FRP-1	FRP-1	FRP-1	FRP-1	EXIST.	WB-1	
104	BAR STORAGE	FRP-1	FRP-1	FRP-1	FRP-1	EXIST.	WB-1	
105	STORAGE	FRP-1	FRP-1	FRP-1	FRP-1	EXIST.	WB-1	
106	SCULLERY	FRP-1	FRP-1	FRP-1	FRP-1	EXIST.	WB-1	
107	STORAGE	FRP-1	FRP-1	FRP-1	FRP-1	EXIST.	WB-1	
200	MECHANICAL ACCESS	P-2	P-2	PLWD	PLWD	PLWD	WB-1	
201	MECHANICAL LOFT	PLWD	PLWD	PLWD	PLWD	PLWD	PLWD	
202	SPRINKLER ROOM	P-2	P-2	P-2	P-2	PLWD	WB-1	

FINISH LEGEND

ITEM	DESCRIPTION	MANUFACTURER	STYLE/COLOR	COMMENTS
01-WALL BASE				
WB-1	VINYL WALL BASE	TARKETT JOHNSONITE	TRADITIONAL VINYL 1/8" TYPE TV 4" HIGH 21 PLATINUM CG	
02-WALL				
CP-1	EXTERIOR / INTERIOR COMPOSITE PANEL SYSTEM	WPS, INC. TRESPA / METEON	WOOD DECORS NW03 HARMONY OAK STAIN ON ES-500 CONCEALED TRACK SYSTEM	
FRP-1	FRP WALL PANEL	MARLITE	STANDARD FRP MEDIUM GREY P430N	
P-1	WATER BASED CATALYZED EPOXY PAINT	SHERWIN WILLIAMS	ROCK BOTTOM SW 7062	SKYLIGHT WELLS & TOP OF SOFFIT. EGG SHELL FINISH
P-2	WATER BASED CATALYZED EPOXY PAINT	SHERWIN WILLIAMS	EXTRA WHITE SW7006	BACK OF HOUSE CEILING, SPRINKLER ROOM & MECHANICAL ACCESS. EGG SHELL FINISH
PT-1	PORCELAIN TILE	TILEBAR	BOND INDIO MATTE 12" X 24"	PATTERN PER ELEVATIONS
03-CEILING				
MP-1	EXTERIOR / INTERIOR LINEAR METAL PANEL CEILING / SOFFIT SYSTEM SUSPENDED ACOUSTICAL LAY-IN CEILING PANELS	CERTAINTEED	150F LINEAR METAL SOFFIT SYSTEM 11/16" THICK ALUMIUM 6" WIDE WOOD-LOOK FINISH/COLOR: NORTHWEST MOUNTAIN HEMLOCK (8486)	PROVIDE EDGE TRIM AT ALL CORNERS, TERMINATIONS AND TRANSITIONS
MP-2	EXTERIOR / INTERIOR METAL PANEL BEAM WRAP	CERTAINTEED	WOOD-LOOK FINISH/COLOR: NORTHWEST MOUNTAIN HEMLOCK (8486)	PROVIDE EDGE TRIM AT ALL CORNERS, TERMINATIONS AND TRANSITIONS
04-MISCELLANEOUS				
HDB-1	HYBRID ARCHITECTURAL DECORATIVE BEAM ELEMENT	GEOLAM INC	SOLEO 6040 2" X 6" TEAK	
HDPE -1	HDPE MILLWORK PANEL	RICHELIEU	REVOLUTION PANEL KING STARBOARD ST DOLPHIN GRAY 3/4"	
QTZ -1	QUARTZ COUNTERTOP	CORIAN	ETHEREAL WHITE	

1. REVIEW FINISH SCHEDULE PRIOR TO COMMENCEMENT OF WORK. THE GENERAL CONTRACTOR SHALL BE RESPONSIBLE FOR CONFIRMING AVAILABILITY AND EXPECTED LEAD TIME OF SPECIFIED MATERIALS PRIOR TO SUBMISSION OF BIDS.
2. FINISH SAMPLES TO BE PROVIDED BY CONTRACTOR FOR ARCHITECT'S APPROVAL. NO SUBSTITUTIONS ALLOWED UNLESS NOTED OR EQUAL. ALL MATERIALS TO BE ORDERED IN TIMELY FASHION.
3. ENSURE SURFACES TO RECEIVE NEW FINISHES ARE CLEAN, TRUE, AND FREE OF IRREGULARITIES IN CONFORMANCE WITH MANUFACTURER'S RECOMMENDATIONS. DO NOT PROCEED WITH WORK UNTIL UNSATISFACTORY CONDITIONS HAVE BEEN CORRECTED. APPLICATOR SHALL ACCEPT SUBSTRATE PRIOR TO APPLICATION OF SCHEDULED FINISH. COMMENCEMENT OF WORK SHALL INDICATE APPLICATOR'S ACCEPTANCE OF SUBSTRATE.
4. PROVIDE BLOCKING AS REQUIRED WHERE HANDRAILS ARE INDICATED.
5. WOOD AND WOOD LOOK FINISHES ON VERTICAL SURFACES TO HAVE THE GRAIN VERTICAL UNLESS OTHERWISE NOTED.
6. BACK AND SIDE SPLASH TO MATCH WORK SURFACE/COUNTERTOP MATERIAL. SEE ELEVATIONS FOR BACK SPLASH AND SIDE SPLASH LOCATIONS.
7. REFER TO ELEVATIONS FOR MILLWORK FINISH LOCATIONS AND DECORATIVE FINISH DETAILS.
8. ALL FINISHES TO BE INSTALLED PER MANUFACTURER'S GUIDELINES.
9. ALL SURFACES RECEIVING PAINT FINISH SHALL RECEIVE MINIMUM (3) COAT APPLICATION CONSISTING OF (1) COAT PRIMER, AND A MINIMUM OF (2) COLOR COATS. APPLY ADDITIONAL COLOR COATS AS REQUIRED TO ACHIEVE FULL, EVEN COVERAGE.
10. WHERE 'TBD' IS INDICATED ON THE FINISH SCHEDULE FOR "NUMBER" AND/OR "COLOR/FINISH"; OR FOR COLOR SELECTION ELSEWHERE IN THESE DOCUMENTS, THE OWNER AND ARCHITECT SHALL CHOOSE FROM THE FULL RANGE OF MANUFACTURER'S COLORS AND FINISH TYPES.

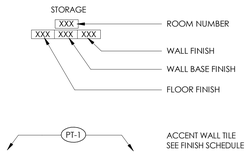

FINISH NOTES 4

FINISH LEGEND 3

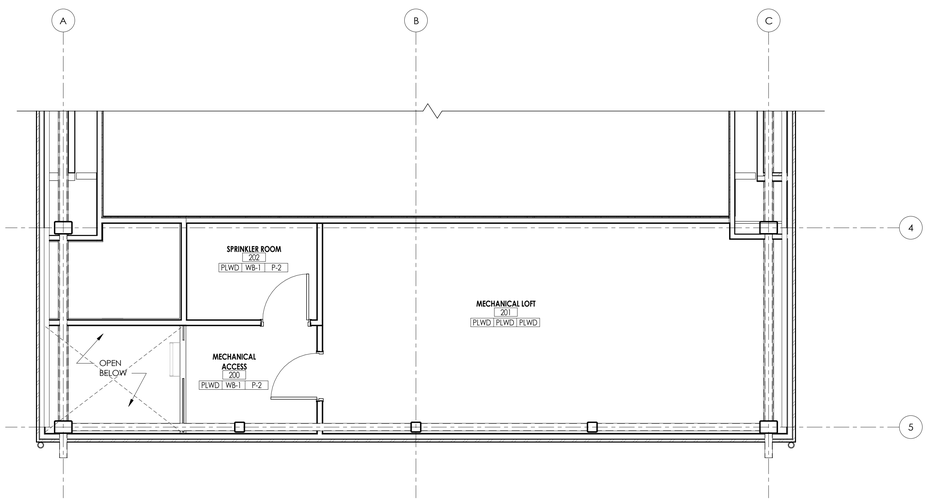

MECHANICAL LOFT FINISH PLAN 1/4" = 1'-0" 2

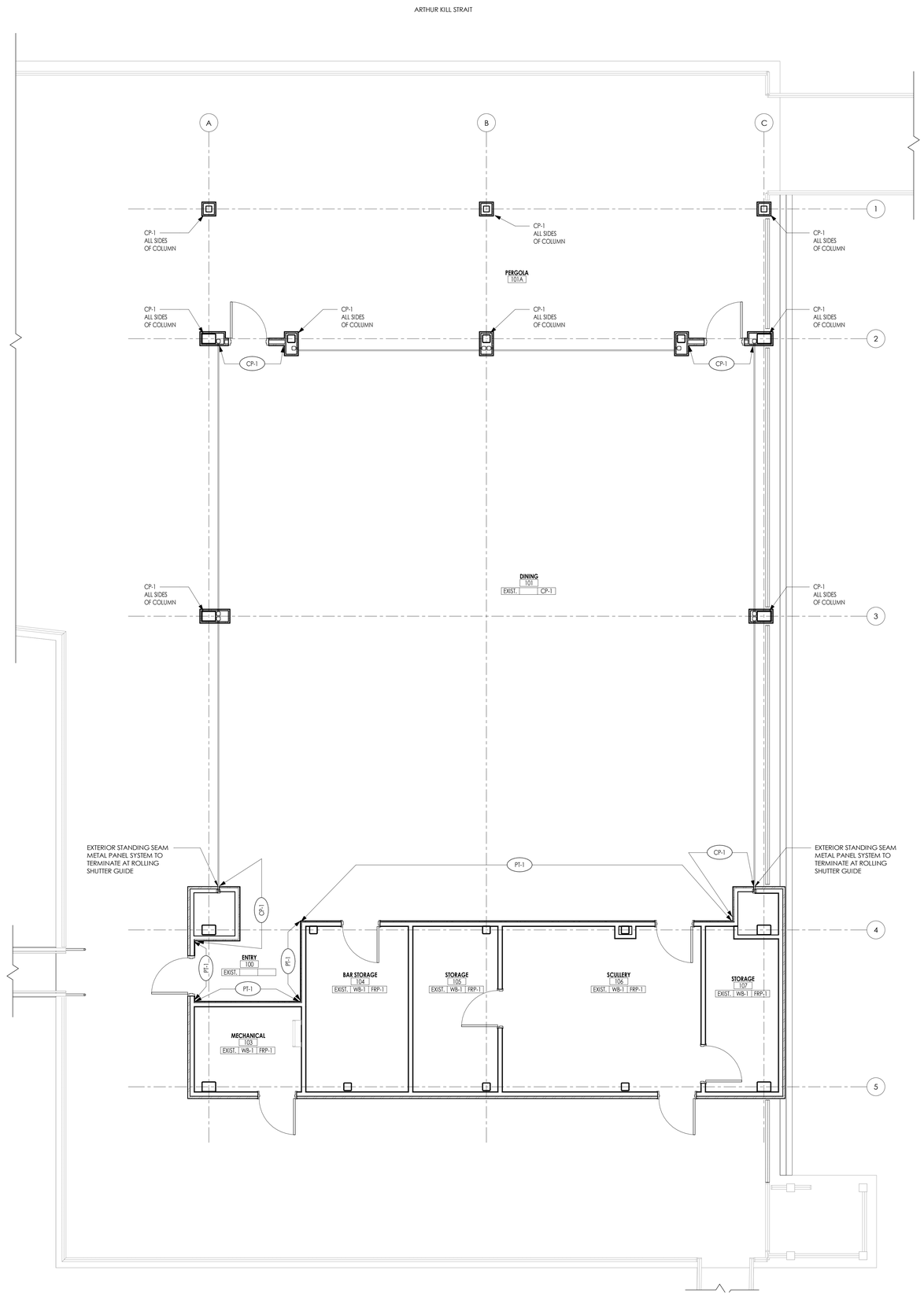

PAVILION FINISH PLAN 1/4" = 1'-0" 1

Key Plan

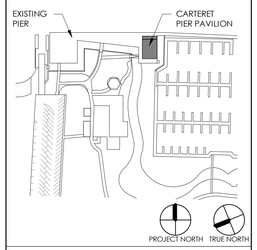

PROJECT

CARTERET PIER PAVILION

WATERFRONT PARK
200 MIDDLESEX AVENUE BLOCK 201 LOT 4
CARTERET, NEW JERSEY 07008

GEOTECHNICAL & STRUCTURAL ENGINEER

McLaren ENGINEERING GROUP
McLaren Technical Services, Inc.
530 Chestnut Ridge Road
Woodcliff Lake, New Jersey 07677
201.775.6000 | www.mgmclaren.com

MEP ENGINEER

KeRi ENGINEERING PC
911 SPRINGFIELD ROAD, SUITE 2
UNION, NEW JERSEY 07083
973.866.5374
INFO@KERIENGINEERING.COM

FOOD SERVICE DESIGN CONSULTANT

RAYMOND/RAYMOND ASSOCIATES
FOOD SERVICE CONSULTANTS SINCE 1938
44 ST. JOHN STREET
GOSHEN, NEW YORK
845.360.5112
INFO@RRADESIGNS.COM

DMR
ARCHITECTURE
PLANNING
ENGINEERING
INTERIORS
CONSULTING
www.dmrarchitects.com

MEMBERS OF THE AMERICAN INSTITUTE OF ARCHITECTS

LLOYD A. ROSENBERG	NJ - AI 05526
KURT A. VIERHEILIG	NJ - AI 17809
PRADEEP KAPOOR	NY - 042197
FERNANDO ROBLEDO	NY - 033804
JANET PINI	NJ - AI 02102900

NOT VALID FOR BIDDING UNLESS SIGNED AND SEALED BY ARCHITECT
777 Terrace Avenue, 6th Floor
Hasbrouck Heights, New Jersey 07604
Tel 201 - 288 - 2600 || Fax 201 - 288 - 2642

NCARB NATIONAL COUNCIL OF ARCHITECTURAL REGISTRATION BOARDS

CO - 306 184 CT - 05438 NJ - AI 05526
NJ-BOARD OF PROFESSIONAL PLANNERS) - LI 015584
NY - 013025-1 PA - RA - 13437-B

DWG

FINISHES PLAN & SCHEDULE

SCALE: As indicated

DATE	DESCRIPTION	DRN	CHK
06/26/2023	BID SET	JC/MD	DG

REV.	DATE	DESCRIPTION

PROJECT NO. 5146

SHEET NO. A12.0

Copyright © 2023 by DMR

PLOT DATE: 6/27/2023 2:54:02 PM

C:\Users\mdrka\Documents\Revit\5146_Carteret_Pavilion_mdrkaR24.rvt
6/27/2023 2:54:02 PM

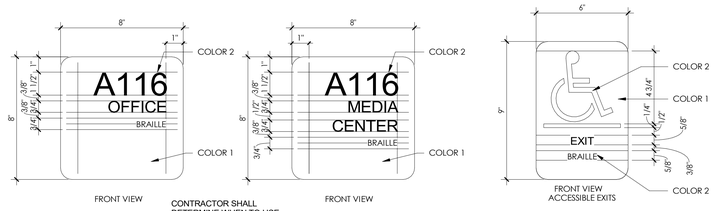

TYPE 1

CONTRACTOR SHALL DETERMINE WHEN TO USE SINGLE LINE OR MORE

TYPE 1

SHOWN WITH MULTIPLE LINE WORDING

TYPE 2

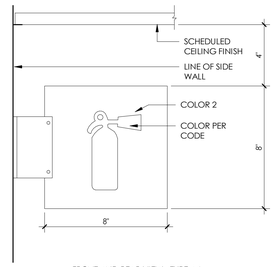

FRONT AND REAR VIEW - TYPE A4
(DOUBLE SIDED PROJECTION MOUNTED)
MOUNT CENTERED ON FIRE EXTINGUISHER CABINET BELOW

TYPE 3

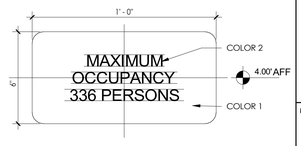

FRONT VIEW

TYPE 4

INTERIOR SIGNAGE DETAILS 3" = 1'-0" 4

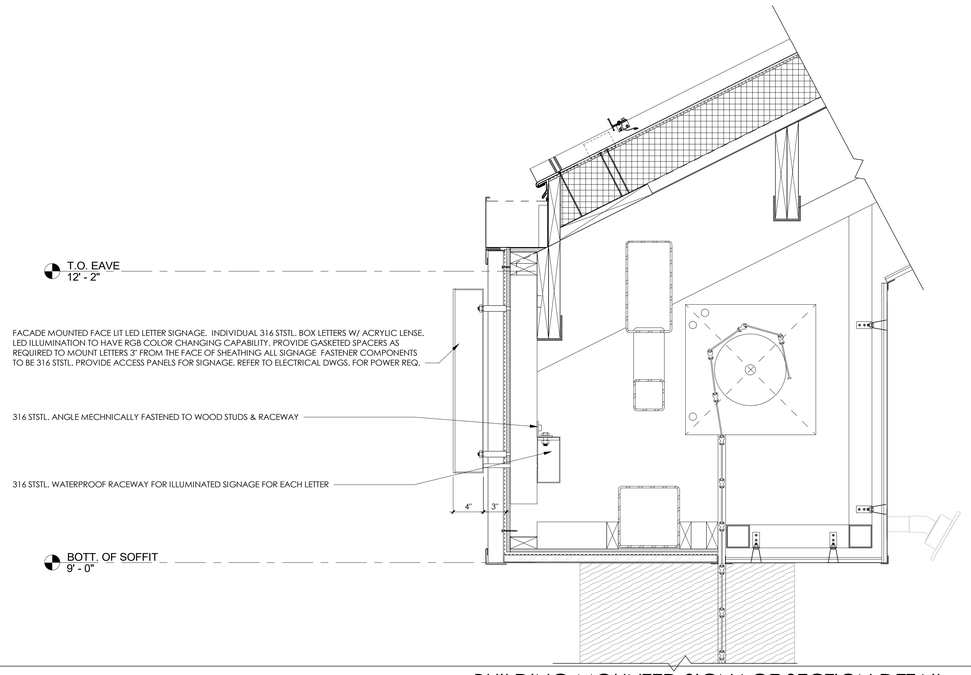

BUILDING MOUNTED SIGNAGE SECTION DETAIL 1 1/2" = 1'-0" 12

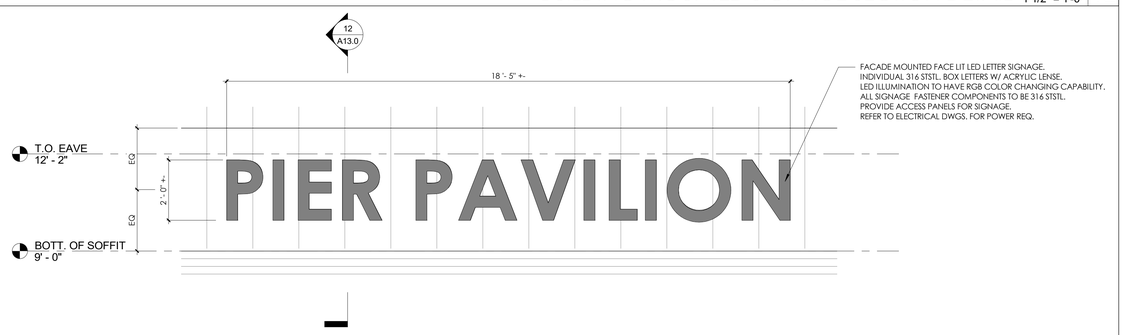

ENLARGED EXTERIOR ILLUMINATED SIGNAGE ELEVATION 1/2" = 1'-0" 11

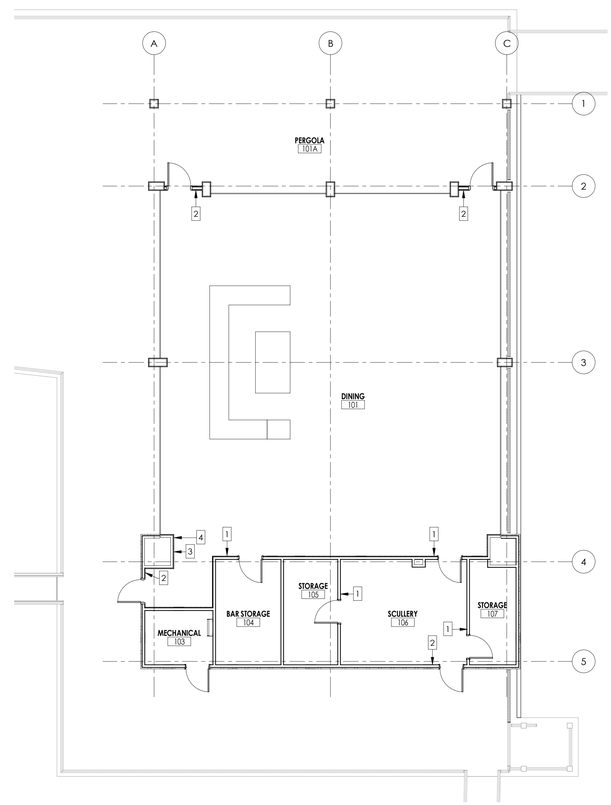

PAVILION SIGNAGE PLAN 1/8" = 1'-0" 1

C:\Users\mariot\Documents\Revit\5146_Carteret_Pavilion_mariotRFK6hk.rvt
6/27/2023 2:54:04 PM

Key Plan

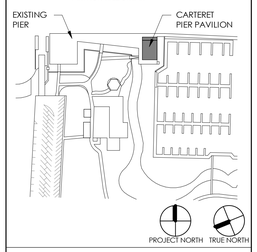

PROJECT

CARTERET PIER PAVILION

WATERFRONT PARK
200 MIDDLESEX AVENUE BLOCK 201 LOT 4
CARTERET, NEW JERSEY 07008

GEOTECHNICAL & STRUCTURAL ENGINEER

McLaren ENGINEERING GROUP

McLaren Technical Services, Inc.
530 Chestnut Ridge Road
Woodcliff Lake, New Jersey 07677
201.775.6000 | www.mgmclaren.com

MEP ENGINEER

KeRi ENGINEERING PC

911 SPRINGFIELD ROAD, SUITE 2
UNION, NEW JERSEY 07083
973.866.5374
INFO@KERIENGINEERING.COM

FOOD SERVICE DESIGN CONSULTANT

RAYMOND/RAYMOND ASSOCIATES
FOOD SERVICE CONSULTANTS SINCE 1938

44 ST. JOHN STREET
GOSHEN, NEW YORK
845.360.5112
INFO@RRADESIGNS.COM

DMR
ARCHITECTURE
PLANNING
ENGINEERING
INTERIORS
CONSULTING
www.dmrarchitects.com

MEMBERS OF THE AMERICAN INSTITUTE OF ARCHITECTS

LLOYD A. ROSENBERG	NJ - AI 05526
KURT A. VIERHEILIG	NJ - AI 17809
PRADEEP KAPOOR	NY - 042197
FERNANDO ROBLEDO	NY - 033804
JANET PINI	NJ - AI 02102900

NOT VALID FOR BIDDING UNLESS SIGNED AND SEALED BY ARCHITECT

777 Terrace Avenue, 6th Floor
Hasbrouck Heights, New Jersey 07604
Tel 201 - 288 - 2600 || Fax 201 - 288 - 2662

NCARB NATIONAL COUNCIL OF ARCHITECTURAL REGISTRATION BOARDS

CO - 306 184 CT - 05438 NJ - AI 05526
NJ-BOARD OF PROFESSIONAL PLANNERS - LI 01584
NY - 013023-1 PA - RA - 13437-B

DWG

SIGNAGE

SCALE As indicated

DATE	DESCRIPTION	DRN	CHK
06/26/2023	BID SET	JC/MD	DG

REV.	DATE	DESCRIPTION

PROJECT NO.	SHEET NO.
5146	A13.0

Copyright © 2023 by DMR

PLOT DATE: 6/27/2023 2:54:04 PM

GENERAL NOTES

1. BUILDING CODE: THESE PLANS HAVE BEEN PREPARED IN ACCORDANCE WITH THE 2021 BUILDING CODE OF NEW JERSEY. ALL WORK SHALL BE PERFORMED IN ACCORDANCE WITH THIS CODE, ITS LATEST ADOPTED AMENDMENTS AND LOCAL REQUIREMENTS.

2. SUBMITTALS
   A. THE FOLLOWING ITEMS REQUIRE SUBMITTAL OF SHOP AND ERECTION DRAWINGS, FOR REVIEW AND APPROVAL:
      a. REINFORCING STEEL FOR CAST-IN-PLACE CONCRETE
      b. STEEL DECKING
      c. STRUCTURAL STEEL
      d. COMPOSITE DRAWING OF ALL PENETRATIONS
      e. CONCRETE CONSTRUCTION AND CONTRACTION JOINTS
   B. THE FOLLOWING ITEMS REQUIRE SUBMITTAL OF SHOP AND ERECTION DRAWINGS AND STRUCTURAL CALCULATIONS SIGNED AND SEALED BY A PROFESSIONAL ENGINEER REGISTERED IN THE STATE OF THIS PROJECT FOR REVIEW AND APPROVAL:
      a. EXTERIOR CURTAIN WALLS, COLD FORMED STEEL FRAMING, AND STOREFRONTS.
      b. SKYLIGHTS
      c. STRUCTURAL STEEL CONNECTIONS
      d. STRUCTURAL LIGHT GAUGE FRAMING
      e. STRUCTURAL WOOD FRAMING
      f. PILE SPLICES
      g. STEEL STAIRS, GUARDRAILS, HANDRAILS
      h. SPECIAL STRUCTURES AS DEFINED IN THE CONTRACT DOCUMENTS
      i. CONCRETE MIX DESIGNS
   C. THE CONTRACTOR SHALL SUBMIT TO THE EOR A SUBMITTAL SCHEDULE A MINIMUM OF 15 BUSINESS DAYS PRIOR TO THE ISSUANCE OF THE FIRST SUBMITTAL PACKAGE FOR REVIEW AND APPROVAL.
   D. THE CONTRACTOR SHALL ALLOW FOR A MINIMUM REVIEW TIME OF 10 BUSINESS DAYS ON AVERAGE BY THE EOR PLUS ANY ADDITIONAL TIME REQUIRED BY THE OTHER DESIGN PROFESSIONALS. SUBMITTAL PACKAGES SHALL BE BROKEN UP AND SCHEDULED SO THAT THE RATE OF REVIEW EXPECTED OF THE STRUCTURAL ENGINEER DOES NOT EXCEED THE FOLLOWING:
      a. STRUCTURAL STEEL: 80 SHEETS/WEEK (1PC/SHEET)
      b. CONCRETE REINFORCEMENT: 20 SHEETS/WEEK
   E. SUBMITTALS ISSUED TO THE DESIGN TEAM FOR REVIEW SHALL BEAR THE CONTRACTOR'S STAMP OF APPROVAL, CERTIFYING THAT ALL FIELD MEASUREMENTS, CONSTRUCTION CRITERIA, MATERIALS, ETC. HAVE BEEN VERIFIED AND EACH SHEET HAS BEEN REVIEWED FOR COMPLETENESS, COORDINATION BETWEEN TRADES, AND COMPLIANCE WITH THE CONTRACT DOCUMENTS. FURTHER, STRUCTURAL SHOP DRAWINGS WILL ONLY BE REVIEWED ONCE ANY REQUIRED CALCULATION PACKAGES FOR THAT WORK HAS BEEN ISSUED ALONG WITH A SIGNED AND SEALED LETTER BY THE CONTRACTOR'S ENGINEER CERTIFYING THAT THE SHOP DRAWINGS HAVE PROPERLY INCORPORATED THEIR DESIGN, IN ACCORDANCE WITH THE 2010 AISC CODE OF STANDARD PRACTICE-SECTION 3.1.2 (OPTION 3), OTHERWISE THE SUBMITTAL PACKAGE WILL BE REJECTED.

3. SPECIAL INSPECTIONS: AS PER IBC CHAPTER 17, THE FOLLOWING ITEMS ARE SUBJECT TO SPECIAL INSPECTION BY AN INDEPENDENT INSPECTION AND/OR TESTING AGENCY HIRED BY THE OWNER AND APPROVED BY THE ARCHITECT AND BUILDING OFFICIAL. OWNER/SPECIAL INSPECTOR SHALL PROVIDE SPECIAL INSPECTION REPORTS WITHIN 5 DAYS OF PERFORMING THE INSPECTION AND IMMEDIATELY NOTIFY THE ENGINEER.

A. STEEL CONSTRUCTION	(1705.2)
a. STRUCTURAL STEEL (SEE AISC360-10, CHAP. N)	(1705.2.1)
b. COLD-FORMED STEEL DECK	(1705.2.2)
B. CONCRETE CONSTRUCTION	(1705.3)
C. DEEP DRIVEN FOUNDATIONS	(1705.7)
D. CAST-IN-PLACE DEEP FOUNDATIONS	(1705.8)
E. FABRICATED ITEMS	(1705.10)
F. POST-INSTALLED ANCHORS	(ACI318 17.8.2)

4. DESIGN LOADS:
   A. GRAVITY LOADS (PSF):

UNIFORM DESIGN LOADS (PSF)

OCCUPANCY TYPE	SUPERIMPOSED DEAD LOAD (SDL)					LIVE LOAD
	FLOOR FINISH	HUNG LOADS	ROOF/ INSUL.	MISC.	TOTAL DEAD	
ASSEMBLY	5	-	-	15	20	100
ATTIC	5	-	-	30	35	40
ROOF	-	5	5	25	35	20

   B. FLOOR LIVE LOADS HAVE BEEN REDUCED IN ACCORDANCE WITH CODE FOR GIRDERS AND COLUMNS.
   C. ROOF DEAD LOAD INCLUDES 15 PSF ALLOWANCE FOR WEIGHT OF MECHANICAL EQUIPMENT.
   D. WIND LOADS:
      a. ULTIMATE DEISGN WIND SPEED (V_{ULT}): 114 MPH
      b. NOMINAL DESIGN WIND SPEED (V_{ASD}): 88 MPH
      c. WIND RISK CATEGORY: II
      d. EXPOSURE CATEGORY: D
      e. INTERNAL PRESSURE COEFFICIENT (GCpi): ± 0.55
   E. COMPONENTS AND CLADDING (MEMBERS SUPPORTING A TRIBUTARY AREA LESS THAN 700 SQ. FT.) SHALL BE DESIGNED FOR WIND PRESSURES GIVEN IN THE COMPONENTS AND CLADDING TABLES GIVEN ON THIS SHEET.
   F. ROOF SNOW LOADS:
      a. GROUND SNOW LOAD (P_g): 25 PSF
      b. SNOW EXPOSURE FACTOR (C_e): 0.90
      c. SNOW THERMAL FACTOR (C_t): 1.20
      d. SNOW IMPORTANCE FACTOR (I_s): 1.00
      e. FLAT ROOF SNOW LOAD (Pf): 20 PSF
      f. SNOW DRIFT LOAD HAS BEEN CONSIDERED WHERE REQUIRED.
   G. SEISMIC LOADS:
      a. SEISMIC IMPORTANCE FACTOR (I_e): 1.00
      b. OCCUPANCY CATEGORY: II
      c. SPECTRAL RESPONSE ACCELERATIONS: S_S= 0.276g, S_1= 0.058g
      d. SITE CLASS: D
      e. SPECTRAL RESPONSE COEFFICIENTS: S_{DS}= 0.291g, S_{D1}= 0.093g
      f. SEISMIC DESIGN CATEGORY (SDC): B
      g. BASIC SEISMIC FORCE RESISTING SYSTEM: STEEL SYSTEM NOT SPECIFICALLY DETAILED FOR SEISMIC RESISTANCE
      h. DESIGN BASE SHEAR: 1 KIPS
      i. RESPONSE MODIFICATION FACTOR (R): 3
      j. ANALYSIS PROCEDURE: EQUIVALENT LATERAL FORCE

5. SERVICEABILITY: THE NEW STRUCTURE HAS BEEN DESIGNED FOR THE FOLLOWING DEFLECTION AND DRIFT LIMITS:
   A. LIVE LOAD DEFLECTION: L/360
   B. LONG TERM TOTAL LOAD DEFLECTION: L/240
   C. LATERAL WIND DRIFT: H/400
   D. LATERAL SEISMIC DRIFT: H/150
   E. SPANDREL BEAMS LIVE LOAD DEFLECTION: +/- 0.75"
   F. ALL FACADE CURTAINWALLS, STOREFRONTS, AND NEW STRUCTURAL PARTITIONS SHALL BE DESIGNED TO ACCOMODATE THE BUILDING MOVEMENT.

6. ALL WORK SHALL BE COORDINATED WITH ARCHITECTURAL, ELECTRICAL, AND MECHANICAL DRAWINGS. CONFLICTS IN DIMENSIONS AND INTERFERENCES SHALL BE DIRECTED TO OUR OFFICE PRIOR TO CONSTRUCTION OF WORK.

7. THE CONTRACTOR SHALL CHECK THE BUILDING LOCATION WITH REGARD TO PROPERTY LINE, AND VERIFY ALL EXISTING CONDITIONS BEFORE EXCAVATION AND SHOP DRAWING PREPARATION. NOTIFY THE ARCHITECT/ENGINEER OF ANY DISCREPANCIES.

8. THE DESIGN AT THE EXISTING PART OF THE BUILDING WHICH WILL REMAIN IS BASED ON INCOMPLETE INFORMATION ABOUT THE EXISTING STRUCTURE AND FOUNDATIONS. AS THE WORK PROGRESSES, THE CONTRACTOR SHALL PROVIDE THE ENGINEER WITH FIELD INFORMATION ABOUT THE EXISTING FOUNDATION AND OTHER STRUCTURAL MEMBERS AND WILL FOLLOW ANY CHANGES IN DESIGN THAT WILL BE REQUIRED BY THE ENGINEER DUE TO UNANTICIPATED FIELD CONDITIONS.

9. IN CASE OF CONTRADICTION BETWEEN THE DRAWINGS, THE SPECIFICATIONS, AND THE CODES, OR IF ANY CHANGE IS REQUIRED, THE CONTRACTOR SHALL INFORM THE ENGINEER IMMEDIATELY. NO CHANGE SHALL BE MADE WITHOUT WRITTEN APPROVAL OF THE ARCHITECT.

10. THE STABILITY OF STRUCTURE, ADJACENT STRUCTURES IMPACTED BY THE WORK, AND SITE SAFETY ARE THE CONTRACTOR'S RESPONSIBILITY UNTIL CONSTRUCTION IS COMPLETE AND THE STRUCTURE HAS REACHED ITS FINAL CONDITION. THE CONTRACTOR IS RESPONSIBLE FOR ANY TEMPORARY BRACING, ERECTION PIECES, CONSTRUCTION SUPPORTS, FALL PROTECTION, DEBRIS CATCHES, TEMPORARY SHORING, ETC. AS REQUIRED TO SAFEGUARD THE SITE THROUGHOUT THE COURSE OF CONSTRUCTION.

11. THE CONTRACTOR SHALL VERIFY THAT ANY CONSTRUCTION LOADS DO NOT EXCEED THE DESIGN CAPACITY OF THE STRUCTURE.

12. VIBRATION EQUIPMENT MUST BE MOUNTED ON VIBRATION ISOLATORS. THE STRUCTURAL SYSTEM HAS NOT BEEN DESIGNED FOR VIBRATION EQUIPMENT.

ABBREVIATIONS

ABV.	ABOVE
ADD'L	ADDITIONAL
AESS	ARCHITECTURALLY EXPOSED STRUCTURAL STEEL
ALT.	ALTERNATE
ARCH.	ARCHITECTURAL
B or BOT.	BOTTOM
BAL.	BALANCE
BLDG.	BUILDING
BLW.	BELOW
BM	BEAM
BP	BEARING PLATE or BASE PLATE
BR.	BRACE
BRG.	BEARING
BTW.	BETWEEN
C	CAMBER
CANT.	CANTILEVER
CFMF	COLD-FORMED METAL FRAMING
CL or ℄	CENTERLINE
CLR.	CLEAR
CIP	CAST-IN-PLACE
CMU	CONCRETE MASONRY UNIT
COL.	COLUMN
CONC.	CONCRETE
CONN. or CXN.	CONNECTION
CONST.	CONSTRUCTION
CONT.	CONTINUOUS
COORD.	COORDINATE
DEPR.	DEPRESSION
DEG. or °	DEGREE
DFT	DRY FILM THICKNESS
DIA. or Ø	DIAMETER
DIM(S)	DIMENSION(S)
DWG	DRAWING
DWL(S)	DOWEL(S)
EA.	EACH
EE	EACH END
EF	EACH FACE
EL. or ELEV.	ELEVATION
EOS	EDGE OF SLAB
EQ	EQUAL
EW	EACH WAY
EX. or EXIST.	EXISTING
EXP.	EXPANSION
FLR.	FLOOR
F.O.	FACE OF
FRP	FIBERGLASS REINFORCING POLYMER
FS	FAR SIDE
FT or '	FOOT (FEET)
FTG.	FOOTING
Fy	YIELD STRESS
GA.	GAGE
GALV.	GALVANIZED
GR.	GRADE
HOR.	HORIZONTAL
H.P.	HIGH POINT
ID	INSIDE DIAMETER
IN or "	INCH(ES)
INT.	INTERMEDIATE
JT.	JOINT
K	KIPS (1 KIP = 1,000 POUNDS)
KSF	KIPS PER SQUARE FOOT
KSI	KIPS PER SQUARE INCH
LB or #	POUND (FORCE)
LE	LEFT END
LG.	LONG or LENGTH
LLH	LONG LEG HORIZONTAL
LLV	LONG LEG VERTICAL
L.W.	LONG WAY
L.P.	LOW POINT
LVL	LAMINATED VENEER LUMBER
MAX.	MAXIMUM
MEP	MECHANICAL, ELECTRICAL, PLUMBING
MFGR	MANUFACTURER
MIN.	MINIMUM
MECH.	MECHANICAL
MISC.	MISCELLANEOUS
MO	MASONRY OPENING
MOM.	MOMENT
MTL.	METAL
NTS	NOT TO SCALE
NIC	NOT IN CONTRACT
NS	NEAR SIDE
o/c	ON CENTER
O.D.	OUTSIDE DIAMETER
OPNG.	OPENING
OPP.	OPPOSITE
PAF	POWDER-ACTUATED FASTENER
PL or ℙ	PLATE
PSI	POUNDS PER SQUARE INCH
PSF	POUNDS PER SQUARE FOOT
PSL	PARALLEL STRAND LUMBER
PT	POST-TENSIONED
QTY.	QUANTITY
R	RADIUS
RE	RIGHT END
REINF.	REINFORCING
REF.	REFERENCE
REQ'D	REQUIRED
SC	SLIP CRITICAL
SCHED.	SCHEDULE
SIM.	SIMILAR
SOG	SLAB ON GRADE
SS	STAINLESS STEEL
STIFF.	STIFFENER
STL.	STEEL
STRUCT.	STRUCTURE or STRUCTURAL
SYMM.	SYMMETRY or SYMMETRICAL
S.W.	SHORT WAY
T	TOP
TG	TRANSFER GIRDER
THK.	THICK or THICKNESS
TLS	TENSION LAP SPLICE
TYP.	TYPICAL
U.O.N.	UNLESS OTHERWISE NOTED
VA.	VARIES
VERT.	VERTICAL
VIF	VERIFY IN FIELD
W/	WITH
WP	WORK POINT
WWF	WELDED WIRE FABRIC

SYMBOLS

- SECTION OR DETAIL CALL-OUT, ARROW INDICATES DIRECTION OF VIEW
- EL . . . DENOTES ELEVATION
- DENOTES CHANGE IN ELEVATION
- DENOTES CHANGE IN THICKNESS
- DENOTES RAMP DOWN / UP
- WP. . . DENOTES WORK POINT
- DENOTES COLUMN OR POST TERMINATING ABOVE OR BELOW
- DENOTES HANGER SUPPORT ABOVE OR BELOW
- SA SB DENOTES SLOPING COLUMN ABOVE (SA) OR BELOW (SB), ARROW INDICATES DIRECTION OF SLOPE
- WA WB DENOTES WALKING COLUMN ABOVE (WA) OR BELOW (WB), ARROW INDICATES DIRECTION OF SLOPE
- M=000 DENOTES MOMENT CONNECTION (M=MOMENT IN KIP-FT)
- A=000 DENOTES AXIAL CONNECTION (A=FORCE IN KIPS)
- F.D. DENOTES FULL-DEPTH STIFFENER CONNECTION
- EP. . . DENOTES EMBEDDED PLATE (EP) CONNECTION
- BP. . . DENOTES BEARING PLATE (BP) CONNECTION
- DENOTES VERTICAL BRACING
- DENOTES SLAB OR DECK SPAN DIRECTION
- INDICATES COLUMN HOLD CORNER / HOLD FACE
- DENOTES ONE-WAY SLAB SPAN DIRECTION
- DENOTES STANDARD REBAR HOOK (90° OR 180°)
- DENOTES CONTINUOUS REBAR MAT

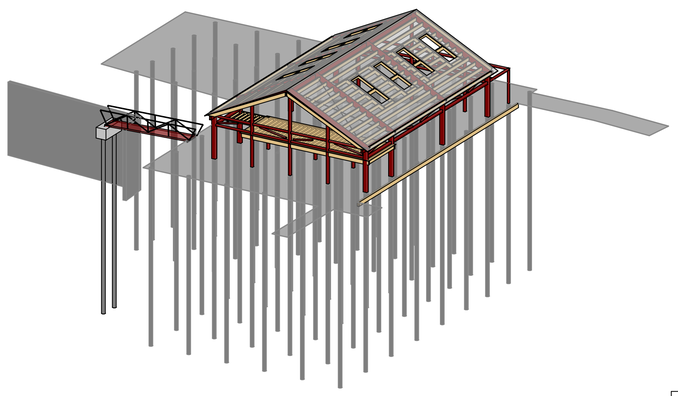

ISOMETRIC

COMPONENTS & CLADDING WIND PRESSURES

TABLE 1 - NEGATIVE WALL & ROOF PRESSURES

WIND AREA	ROOF PRESSURES (PSF)			WALL PRESSURES (PSF)	
	ZONE 1, 2e, 2r	ZONE 2n, 3r	ZONE 3e	ZONE 4	ZONE 5
10 SF	-72.3	-80.6	-96.4	-52.1	-61.6
50 SF	-52.1	-61.6	-74.3	-49.0	-55.3
100 SF	-42.7	-55.3	-64.8	-45.8	-52.1
500 SF	-42.7	-49.0	-49.0	-42.7	-42.7

TABLE 2 - POSITIVE WALL & ROOF PRESSURES

WIND AREA	ROOF PRESSURES (PSF)	WALL PRESSURES (PSF)
	ALL ZONES	ALL ZONES
10 SF	45.8	49.0
50 SF	36.3	45.8
100 SF	33.2	42.7
500 SF	33.2	39.5

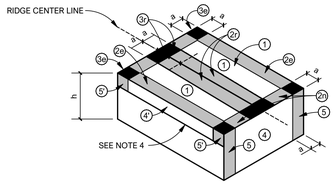

SCHEMATIC DIAGRAM

INTERIOR ZONES
ROOF ZONES 1
WALL ZONE 4 OR 4'

EDGE ZONES
ROOF ZONE 2e, 2r, OR 2n
WALL ZONE 5 OR 5'

CORNER ZONES
ROOF ZONE 3r OR 3e

NOTES:

1. "a" DENOTES 10% OF LEAST HORIZONTAL BUILDING DIMENSION OR 0.4h, WHICHEVER IS LESS (BUT NOT LESS THAN 4% OF THE LEAST HORIZONTAL DIMENSION OR 3'-0").
2. "h" DENOTES MEAN ROOF HEIGHT ABOVE GRADE.
3. ZONES ARE SYMMETRICAL ABOUT THE RIDGE CENTER LINE
4. LINE INDICATES LOCATION OF OVERHANG
5. + AND - INDICATE PRESSURE ACTING TOWARD AND AWAY FROM SURFACE, RESPECTIVELY.

STRUCTURAL SHEET INDEX

ISSUE: 06-26-2023 - RELEASED FOR BID	01-27-2023 - ISSUED FOR OWNER REVIEW	01-11-2023 - 95% PROGRESS SET	SHEET No.	SHEET TITLE
S0-SERIES - GENERAL				
●	●	●	S001	GENERAL NOTES, ABBREVIATIONS, & SHEET INDEX
●	●	●	S002	STRUCTURAL NOTES
S1-SERIES - PLANS				
●	●	●	S100	PAVILION FRAMING PLAN
●	●	●	S101	ROOF FRAMING PLAN
S2-SERIES - SCHEDULES & ELEVATIONS				
●	●	●	S200	COLUMN SCHEDULE
●	●	●	S201	PAVILION ELEVATIONS
S3-SERIES - DETAILS				
●	●	●	S300	TYPICAL DETAILS
●	●	●	S301	TYPICAL DETAILS
●	●	●	S302	TYPICAL DETAILS

Key Plan

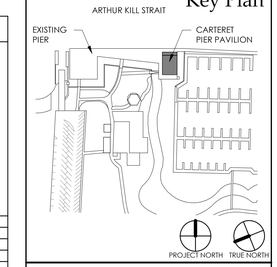

PROJECT
CARTERET PAVILION
CARTERET, NJ

GEOTECHNICAL & STRUCTURAL ENGINEER
McLaren ENGINEERING GROUP
McLaren Technical Services, Inc.
530 Chestnut Ridge Road
Woodcliff Lake, New Jersey 07677
201.775.6000 | www.mgmclaren.com

MEP ENGINEER
KeRi ENGINEERING PC
911 SPRINGFIELD ROAD, SUITE 2
UNION, NEW JERSEY 07083
973.866.5374
INFO@KERIENGINEERING.COM

CIVIL ENGINEER
CME ASSOCIATES
Consulting & Municipal ENGINEERS
1460 RT. 9 SOUTH
HOWELL, NEW JERSEY 07731
732.462.7400
INFO@CMEUSA1.COM

FOOD SERVICE DESIGN CONSULTANT
RAYMOND/RAYMOND ASSOCIATES
FOOD SERVICE CONSULTANTS SINCE 1936
44 ST. JOHN STREET
GOSHEN, NEW YORK
845.360.5112
INFO@RRADESIGNS.COM

DMR
ARCHITECTURE
PLANNING
ENGINEERING
INTERIORS
CONSULTING
www.dmrarchitects.com
MEMBERS OF THE AMERICAN INSTITUTE OF ARCHITECTS
LLOYD A. ROSENBERG — NJ - AI 05526
KURT A. VIERHEILIG — NJ - AI 17809
PRADEEP KAPOOR — NY - 042197
FERNANDO ROBLEDO — NY - 033804
JANET PINI — NJ - AI 02102900

RELEASED FOR BID
06.26.2023

NOT VALID FOR BUILDING UNLESS SIGNED AND SEALED BY ARCHITECT

777 Terrace Avenue, 6th Floor
Hasbrouck Heights, New Jersey 07604
Tel 201 - 288 - 2600 || Fax 201 - 288 - 2662

NCARB — NATIONAL COUNCIL OF ARCHITECTURAL REGISTRATION BOARDS
CO - 306 184 CT - 05438 NJ - AI 05526
NJ-BOARD OF PROFESSIONAL PLANNERS) - LI 01584
NY - 013023-1 PA - RA - 13437-B

DWG
GENERAL NOTES, ABBREVIATIONS, & SHEET INDEX

SCALE: As indicated

DATE	DESCRIPTION	DRN	CHK
06.26.2023	RELEASED FOR BID		

REV.	DATE	DESCRIPTION

PROJECT NO. 220485
SHEET NO. S001

Copyright © 2022 by DMR
PLOT DATE: 6/27/2023 9:19:46 PM

C:\Users\zsheng\OneDrive - mgmclaren.com\Documents\220485 - Carteret Pavilion-zsheng3TNSJ - R20_01.rvt
6/27/2023 9:19:46 PM

FOUNDATION

FOUNDATION NOTES

1. GENERAL
   A. DEEP FOUNDATIONS WERE ORIGINALLY DESIGNED TO AN ALLOWABLE 25 TON TIMBER PILE CAPACITY, BASED ON A SOILS REPORT ISSUED BY PMK GROUP CONSULTING ENGINEERS DATED JUNE 21, 1996. McLAREN ENGINEERING GROUP PERFORMED CALCULATIONS PER THE TIMBER PILE DESIGN AND CONSTRUCTION MANUAL AND DETERMINED THE PILES CAN BE RATED FOR 50 TON CAPACITY.
   B. ALL FILL SHALL BE PLACED IN EIGHT INCH LOOSE LIFTS (MAXIMUM) COMPACTED WITH VIBRATORY ROLLERS. FILL MATERIAL SHALL BE TESTED BY MODIFIED PROCTOR DENSITY METHOD (ASTM D1557) AND MUST QUALIFY AS SELECT, WITH LESS THAN 10% PASSING THROUGH THE NO. 200 SIEVE. SOIL SHALL BE PLACED WITH MOISTURE CONTENT AND ENERGY TO PROVIDE 92% OF MAXIMUM DRY DENSITY BELOW SLABS ON GRADE AND 95% BELOW FOOTINGS. IN PLACE DENSITY TESTS SHALL BE TAKEN FOR EACH 10,000 s.f. IN EACH LIFT. FOR ACCEPTANCE OF SOIL, AVERAGE OF DENSITY TESTS MUST EXCEED THE SPECIFIED COMPACTION. NO TESTS SHALL BE PERMITTED TO FALL BELOW 88% COMPACTION BELOW SLABS ON GRADE OR 90% COMPACTION BELOW FOOTINGS.
2. PILES
   A. TIMBER PILES SHALL BE SIZE, LENGTH, MATERIAL, AND CAPACITY AS SHOWN ON PLAN DRAWINGS.
   B. PILES TO BE INSTALLED IN ACCORDANCE WITH SUITABLE DYNAMIC FORMULA TO BE SELECTED BY THE GEOTECHNICAL ENGINEER.
   C. PILES SHALL BE SOCKETED A MINIMUM OF 5 FEET INTO MEDIUM DENSE SAND STRATUM PER SOILS REPORT.
   D. MAXIMUM ALLOWABLE DEVIATIONS FOR TIMBER PILE INSTALLATION SHALL BE AS FOLLOWS:
      a. HORIZONTAL: 3 IN
      b. VERTICAL: 1 IN
      c. PLUMBNESS: 2%
      d. CONTRACTOR SHALL PROVIDE SURVEY OF "AS-BUILT" PILE LOCATIONS INDICATING NORTH-SOUTH AND EAST-WEST OUT OF TOLERANCE DIMENSIONS FROM THE THEORETICAL PILE CENTERLINE. PILES WHICH ARE OUT OF TOLERANCE OR DO NOT ACHIEVE THE REQUIRED STRENGTH WILL BE SUBJECT TO REDESIGN. THE ENGINEERING COSTS OF THE REDESIGN, ADDITIONAL PILES AND ADDITIONAL PILE CAP COST SHALL BE BORNE BY THE CONTRACTOR.
   E. PILE SPLICES SHALL BE DESIGNED TO ACHIEVE THE FULL AXIAL (COMPRESSION AND TENSION), SHEAR, AND FLEXURAL CAPACITY OF THE PILE SECTION. THE CONTRACTOR SHALL SUBMIT SIGNED AND SEALED DRAWING AND CALCULATIONS FOR REVIEW AND APPROVAL PRIOR TO PILE INSTALLATION.
   F. PILES SHALL BE LOAD TESTED IN ACCORDANCE WITH THE GEOTECHNICAL REPORT AND WHERE SHOWN ON PLANS. IF NOT INDICATED ON PLAN, REQUEST LOCATION BY THE EOR. LOAD TEST DATA AND REPORTS MUST BE APPROVED BY THE EOR BEFORE PRODUCTION COMMENCES.
   G. PILES SHALL BE DRIVEN IN THE PRESENCE OF A PROFESSIONAL ENGINEER, REGISTERED IN THE STATE OF THE PROJECT. BLOWS PER FOOT, PILE ENERGY AND DEPTH OF PILE SHALL BE RECORDED AND SUBMITTED TO THE EOR BY THE SUPERVISING PROFESSIONAL ENGINEER.

CAST-IN-PLACE CONCRETE

CAST-IN-PLACE CONCRETE

1. GENERAL
   A. ALL CONCRETE WORK SHALL CONFORM TO REQUIREMENTS OF THE A.C.I. BUILDING CODE REQUIREMENT FOR STRUCTURAL CONCRETE (318-14 ULTIMATE STRENGTH DESIGN).
   B. 28 DAY MINIMUM COMPRESSIVE STRENGTH AND RELATED PROPERTIES FOR CONCRETE SHALL BE AS FOLLOWS:

	F'_c	MAX. W/C RATIO	MAX. DENSITY
PILE CAPS	5,000 PSI	0.40	NWC (150 PCF)

   C. CONCRETE COVERING OF REINFORCING STEEL (INCLUDING TIES AND STIRRUPS) SHALL CONFORM TO THE FOLLOWING MINIMUM REQUIREMENTS:
      a. 2" FOUNDATION WALL, FOOTING & GRADE BEAM FACES NOT CAST AGAINST EARTH
      b. 3" CONCRETE CAST AGAINST EARTH
   D. ALL CONCRETE, INCLUDING FOUNDATIONS, EXPOSED TO WEATHER AND/OR OUTSIDE THE BUILDING ENVELOPE SHALL BE AIR ENTRAINED, 6%±1.5% BY VOLUME FOR 3/4" COARSE AGGREGATE, AND 7.5%±1.5% BY VOLUME FOR 3/8" LIGHT WEIGHT AGGREGATE. AIR ENTRAINING ADMIXTURE TO COMPLY WITH ASTM C260.
   E. ALL PORTLAND CEMENT SHALL CONFORM TO ASTM C150, TYPE II.
   F. ALL NORMAL WEIGHT CONCRETE AGGREGATE SHALL CONFORM TO ASTM C33.
   G. MAXIMUM CONCRETE SLUMP SHALL BE 4" FOR CONCRETE NOT RECEIVING HIGH-RANGE WATER REDUCING ADMIXTURES.
   H. ALL BARS MARKED CONTINUOUS SHALL BE LAPPED AT SPLICES AND CORNERS IN ACCORDANCE WITH THE SCHEDULE SHOWN ON THESE DRAWINGS, EXCEPT AS OTHERWISE SHOWN OR REQUIRED.
   I. WELDING OF REINFORCEMENT IS PROHIBITED U.O.N.
   J. ALL REINFORCING BARS SHALL BE OF NEW BILLET STEEL CONFORMING TO ASTM A615, WITH THE FOLLOWING GRADE.
      a. #3 THROUGH #10 - GRADE 60 (FY = 60,000 PSI)
      b. #11 AND GREATER - GRADE 75 (FY = 75,000 PSI)
   K. VERTICAL CONSTRUCTION JOINTS USING APPROVED BULKHEADS MAY BE MADE WITHIN THE MIDDLE THIRD OF BEAM, WALL, OR SLAB SPANS WHERE STOP IN CONCRETE WORK IS NECESSARY. A PLAN SHOWING PROPOSED JOINTS SHALL BE SUBMITTED TO THE ENGINEER FOR APPROVAL. HORIZONTAL CONSTRUCTION JOINTS ARE PERMITTED ONLY AS SHOWN ON DRAWINGS. CONSTRUCTION JOINTS SHALL CONFORM TO ACI 318, SECTION 6.4. ALL REINFORCING STEEL SHALL BE CONTINUOUS THROUGH JOINTS U.O.N. FOR ALL CONSTRUCTION JOINTS BELOW WATER TABLE, PROVIDE WATERSTOPS.
   L. VERTICAL JOINTS SHALL NOT BE PLACED IN CONCRETE SHEAR WALLS UNLESS SPECIFICALLY APPROVED IN WRITING BY THE ENGINEER.
   M. ALL HORIZONTAL JOINTS IN CONCRETE POURS (WHERE SHOWN ON STRUCTURAL DRAWINGS OR EXPLICITLY APPROVED BY THE ENGINEER IN WRITING) SHALL BE RAKED TO ¼" AMPLITUDE WHILE CONCRETE IS FRESH.
   N. ALL CONCRETE SHALL BE MIXED, TRANSPORTED AND PLACED IN ACCORDANCE WITH ACI STANDARDS 318 AND 304.
   O. ALL REINFORCING STEEL SHALL BE DETAILED IN ACCORDANCE TO ACI 315.
   P. TEST CYLINDERS SHALL BE TAKEN FROM THE MIXER IN ACCORDANCE WITH ASTM C172 AND THE PROJECT SPECIFICATIONS.
   Q. STONE AGGREGATE USED IN CONCRETE MIX SHALL BE FREE OF MATERIALS WITH HARMFUL REACTIVITY TO ALKALI IN CEMENT.
   R. THE MAXIMUM WATER SOLUBLE CHLORIDE ION (CL-) CONTENT IN CONCRETE FROM ALL INGREDIENTS SHALL BE LESS THAN 0.06% OF WEIGHT OF CEMENT, PER ASTM C1218.
2. CONCRETE FOR FOUNDATIONS
   A. ALL VERTICAL SURFACES OF CONCRETE SHALL BE FORMED FOR WALLS, FOOTINGS, AND GRADE BEAMS.
   B. CONTRACTOR SHALL PROVIDE A MINIMUM AREA OF STEEL REINFORCEMENT EQUAL TO .0018 TIMES THE GROSS CONCRETE AREA IN CONCRETE SLABS AND FOOTINGS, EXCEPT WHERE CONCRETE IS PRESTRESSED. PROVIDE MINIMUM BONDED REINFORCEMENT FOR PRESTRESSED CONCRETE IN ACCORDANCE WITH AC1318 - SECTION 18.9. FOR WALLS, PROVIDE MINIMUM REINFORCING IN ACCORDANCE WITH ACI 318 - SECTION 14.3.

STEEL

STRUCTURAL STEEL

1. GENERAL
   A. STEEL CONSTRUCTION SHALL CONFORM TO AISC "STEEL CONSTRUCTION MANUAL", 13TH EDITION, AND SHALL BE FABRICATED AND INSTALLED IN ACCORDANCE WITH AISC "CODE OF STANDARD PRACTICE FOR STEEL BUILDINGS AND BRIDGES" AS ADOPTED MARCH 18, 2005.
   B. MATERIALS FOR STRUCTURAL STEEL SHALL CONFORM TO THE FOLLOWING ASTM SPECIFICATIONS, U.O.N.:

SHAPE	ASTM	MIN. YEILD STRESS
RECTANGULAR HSS	A1085 or A500, GR. C	50 ksi
ANGLES	A36	36 ksi
PLATE, BAR, AND MISC. STEEL	A36	36 ksi

   C. ALL BOLTED CONNECTIONS SHALL BE MADE USING ASTM F3125 GR. A325/A490 (CONVENTIONAL) BOLTS, OR F1852/F2280 (TWIST OFF TYPE TENSION-CONTROL) BOLTS, 3/4" MIN. DIAMETER. ALL LATERAL SYSTEM (BRACING AND MOMENT FRAME) BOLTED CONNECTIONS SHALL BE PRETENSIONED FOR STANDARD BOLT HOLES AND SLIP-CRITICAL FOR OVERSIZED OR SLOTTED BOLT HOLES (IN THE DIRECTION OF THE LOAD). ALL BOLTED CONNECTIONS SHALL BE INSTALLED IN ACCORDANCE WITH THE AISC SPECIFICATION FOR STRUCTURAL JOINTS USING HIGH-STRENGTH BOLTS, UON.
   D. BOLTED CONNECTIONS DESIGNATED AS PRETENSIONED OR SLIP CRITICAL SHALL BE PRETENSIONED AND INSPECTED AS PER THE "SPECIFICATIONS FOR STRUCTURAL JOINTS USING ASTM A325 OR A490 BOLTS."
   E. ANCHOR RODS SHALL BE OF ASTM F1554 GRADE 55 "WELDABLE" AS PER THE "S1" SUPPLEMENT.
   F. SHOP AND ERECTION DRAWINGS SHALL BE SUBMITTED TO THE STRUCTURAL ENGINEER FOR REVIEW AND APPROVAL. NO FABRICATION OF STEEL SHALL COMMENCE WITHOUT APPROVED SHOP DRAWINGS. SHOP DRAWINGS ARE PREPARED AND USED BY THE CONTRACTOR AS INSTRUMENTS TO SEQUENCE HIS WORK AND TO FACILITATE FABRICATION AND ERECTION. REVIEW OF SHOP DRAWINGS SHALL BE FOR GENERAL DETAIL AND ARRANGEMENT ONLY. CONTRACTOR SHALL BEAR FULL RESPONSIBILITY FOR DIMENSIONS, PROPER FIT AND DETAILED DESIGN OF CONNECTIONS. THEIR APPROVAL BY THE STRUCTURAL ENGINEER IS NOT TO BE CONSTRUED AS A WAIVER OF CONSTRUCTION CONTRACT REQUIREMENTS OR RESPONSIBILITIES, UNLESS THE CONTRACTOR HAS BEEN GRANTED A DEVIATION IN WRITING.
   G. ALL SHEAR CONNECTIONS SHALL BE DESIGNED AND DETAILED FOR SERVICE LEVEL (ASD) VALUES INDICATED ON PLANS. IF NO VALUES ARE GIVEN ON PLANS, SEE TYPICAL CONNECTION DETAILS FOR DESIGN FORCES. ALL BEAM WEB SHEAR CONNECTIONS SHALL BE DESIGNED AND DETAILED SO THAT THE DEPTH OF THE CONNECTION PLATES OR ANGLES ARE NOT LESS THAN ONE-HALF OF THE BEAMS "T" DIMENSION. NO CONNECTION SHALL BE DESIGNED AND DETAILED TO SUPPORT LESS THAN 6 KIPS SERVICE LEVEL REACTION. WHERE POSSIBLE, THE CONTRACTOR SHALL SELECT A SIMPLE SHEAR CONNECTION FROM THE TABLES IN PART 10 OF THE AISC STEEL CONSTRUCTION MANUAL "13TH EDITION-ASD".
   H. THE FORCES INDICATED ON THE PLANS/ELEVATIONS ARE THE MEMBER DESIGN FORCES. LATERAL MOMENT FRAME CONNECTIONS SHALL BE DESIGNED AND DETAILED FOR THE GREATER OF THE FORCES SHOWN ON PLANS/ELEVATIONS OR AS REQUIRED BY AISC 341 FOR THE SEISMIC RESPONSE MODIFICATION FACTOR (R) AND BASIC SEISMIC FORCE RESISTING SYSTEM SHOWN IN THE GENERAL NOTES. THE CONTRACTOR SHALL PROVIDE ANY REINFORCEMENT NECESSARY (STIFFENER PLATES, DOUBLER PLATES, ETC.) REQUIRED TO CONSTRUCT THESE CONNECTIONS.
   I. DURING ERECTION, APPROVED TEMPORARY BRACING SHALL BE INSTALLED AS REQUIRED TO PREVENT DISTORTION OR DAMAGE TO THE FRAMEWORK DUE TO ERECTION FORCES.
   J. STEEL SHOP DRAWINGS SHALL BE COORDINATED WITH STAIR DETAILS.
   K. PROVIDE FITTED WELDED STIFFENER PLATES 1/4" THICK MIN. IN SUPPORT BEAMS ALONGSIDE HANGER LOCATIONS, AT SUPPORT POSTS, AND AT STAIR STRINGER BEAM BEARING POINTS.
   L. ALL EXTERIOR HSS TUBES SHALL HAVE 1/4" THICK STEEL CAP PLATES WELDED ALL AROUND AT ENDS.
   M. ALL INTERIOR STRUCTURAL STEEL SHALL BE CLEANED TO SSPC-SP3 AND SHALL RECEIVE THE FOLLOWING SHOP PRIMER, EXCEPT WHERE FIELD WELDING OR SLIP CRITICAL BOLTING IS TO BE DONE, WHERE STEEL IS TO RECEIVE SPRAY APPLIED FIREPROOFING, OR WHERE SPECIFIED TO BE GALVANIZED:
      a. BUILDING INTERIOR STEEL: TNEMEC 10-99 PRIMER AT 2.5 MILS DFT, OR APPROVED EQUAL.
      b. BUILDING PERIMETER STEEL: TNEMEC 394 PERIMEPRIME AT 3.0 MILS DFT, OR APPROVED EQUAL.
      c. ALL WELDS AND BARE SPOTS SHALL RECEIVE TOUCHUP PAINT.
   N. ALL EXTERIOR OR EXPOSED STRUCTURAL STEEL SHALL BE CLEANED TO SSPC-6 AND RECEIVE THE FOLLOWING THREE COAT SYSTEM (OR APPROVED EQUAL SYSTEM):
      a. PRIMER: TNEMEC 90G-1K97 OR 94-H20 (WHERE LOW VOC'S REQUIRED) - 3 MILS DFT
      b. INTERMEDIATE COAT: TNEMEC 27FC TYPOXY OR 66 HI-BUILD EPOXOLINE - 4 MILS DFT
      c. TOP COAT: TNEMEC 73 ENDURA SHIELD - 2.5 MILS DFT
      d. ALL WELDS AND BARE SPOTS SHALL RECEIVE TOUCHUP PAINT.
   O. ALL EXTERIOR OR EXPOSED STRUCTURAL STEEL, MISCELLANEOUS COMPONENTS, AND HARDWARE SHALL BE HOT-DIP GALVANIZED AFTER FABRICATION IN ACCORDANCE WITH ASTM A123, EXCEPT THE FOLLOWING LOCATIONS: WHERE FIELD WELDING OR SLIP CRITICAL BOLTING IS TO BE DONE AND ON A490 BOLTS. ALL WELDS AND BARE SPOTS SHALL RECEIVE ZRC COLD GAVANIZING COMPOUND (OR APPROVED EQUIVALENT), WITH SURFACE PREPARATION AND APPLICATION IN ACCORDANCE WITH MANUFACTURER RECOMMENDATIONS. ALL A490 BOLTS SHALL RECEIVE ZINC RICH/ALUMINUM COATING IN ACCORDANCE WITH ASTM F2833 GR 1 (MAGNI 565 OR APPROVED EQUIVALENT).
2. WELDING
   A. ALL WELDING SHALL BE PERFORMED IN ACCORDANCE WITH STANDARDS OF THE AMERICAN WELDING SOCIETY. ELECTRODES MUST MEET E70XX SERIES REQUIREMENTS, LOW HYDROGEN, WITH MINIMUM TENSILE STRESS OF 70,000 PSI. ELECTRODES SHALL BE PRODUCED AND STORED IN ACCORDANCE WITH AWS D1.1 SECTIONS 5.3.
   B. STEEL ERECTOR SHALL PROVIDE A FIRE WATCH DURING ALL FIELD WELDING OPERATIONS.
   C. ALL WELDERS ARE TO BE LICENSED AND CERTIFIED TO AWS STANDARDS OR THOSE REQUIRED BY APPLICABLE BUILDING CODE.
   D. ALL WELDS SHALL BE VISUALLY INSPECTED. ALL COMPLETE JOINT PENETRATION GROOVE WELDS SHALL RECEIVE RADIOGRAPHIC OR ULTRASONIC TESTING. MAGNETIC PARTICLE TEST 20% OF ALL MULTI-PASS FILLET WELDS.
   E. REPORTS OF EACH TEST SHALL BE GIVEN TO THE STRUCTURAL ENGINEER. NO FAILED WELD SHALL BE PERMITTED TO REMAIN IN SERVICE. IT IS THE RESPONSIBILITY OF THE TESTING LABORATORY TO PROVIDE TIMELY NOTICE OF FAILED TESTS TO THE CONTRACTOR.
   F. WELDING SHALL PROGRESS IN A MANNER WHICH BALANCES THE STRESSES IN THE MEMBERS, IN ACCORDANCE WITH AWS.
   G. PREHEATING REQUIREMENTS FOR BASE METAL SHALL FOLLOW AWS GUIDELINES.
3. STEEL DECK
   A. ROOF DECK SHALL BE GALVANIZED AND SHALL CONFORM TO THE REQUIREMENTS OF ASTM A653 COATING CLASS G90. UNITS SHALL BE WELDED TO JOISTS OR BEAMS WITH 5/8" PUDDLE WELDS IN A 36/4 PATTERN, U.O.N. SIDE LAPS ARE TO BE WELDED AT A MAXIMUM SPACING OF 36" ON CENTER, U.O.N. DECK SHALL BE CONTINUOUS OVER A MINIMUM OF 2 SPANS.
   B. FLOOR DECK SHALL BE GALVANIZED AND SHALL CONFORM TO THE REQUIREMENTS OF ASTM A653 COATING CLASS G60. UNITS SHALL BE WELDED TO JOISTS OR BEAMS WITH 5/8" PUDDLE WELDS A 36/4 PATTERN. SIDE LAPS ARE TO BE WELDED AT A MAXIMUM SPACING OF 36" ON CENTER, U.O.N. DECK SHALL BE CONTINUOUS OVER A MINIMUM OF 2 SPANS
   C. AS AN ALTERNATE TO PUDDLE WELDING OF STEEL DECKING, HILTI X-HSN OR X-ENP 19 POWDER ACTUATED FASTENERS (PAFs) WITH EQUIVALENT OR GREATER CAPACITY TO SPECIFIED ATTACHMENT CAN BE INSTALLED. IF PAFs ARE USED, USE HILTI S-SLC SIDELAP CONNECTORS. THE CONTRACTOR SHALL SUBMIT ALTERNATIVE FASTENING PATTERN TO THE ENGINEER OF RECORD FOR APPROVAL PRIOR TO INSTALLATION.
   D. PAFs SHALL BE INSTALLED IN ACCORDANCE WITH MANUFACTURER'S RECOMMENDATIONS. CONTRACTOR SHALL BE CERTIFIED AND TRAINED BY THE MANUFACTURER'S REPRESENTATIVE FOR PROPER USE AND INSTALLATION OF PAFs.
   E. DECK UNITS SHALL BE MANUFACTURED AND INSTALLED IN ACCORDANCE WITH CURRENT "DESIGN MANUAL FOR COMPOSITE DECKS, FORM DECKS, AND ROOF DECKS" PUBLISHED BY THE STEEL DECK INSTITUTE.
   F. DECKING CONTRACTOR SHALL PROVIDE ADDITIONAL STEEL ANGLE SUPPORTS AT ALL COLUMNS AND ELSEWHERE WHERE FRAMING OR CONNECTIONS INTERFERE OR INTERRUPT SEATING OF MORE THAN ONE DECK RIB. PERMANENT ANGLES SHALL BE PAINTED.
   G. PROVIDE SUPPORTS FOR METAL DECKING AT ALL OPENINGS.
4. GALVANIZING: WHERE STEEL PRODUCTS ARE SPECIFIED TO BE GALVANIZED, THEY SHALL BE HOT-DIPPED GALVANIZED AFTER FABRICATION, IN ACCORDANCE WITH THE REQUIREMENTS OF THE APPLICABLE SPECIFICATIONS AND OTHER REQUIREMENTS LISTED BELOW.
   A. SPECIFICATIONS FOR ZINC (HOT-GALVANIZED) COATINGS ON PRODUCTS FABRICATED FROM ROLLED, DRESSED AND FORGED STEEL SHAPES, PLATES AND STRIP - ASTM A123, GR. 100.
   B. SPECIFICATION FOR ZINC COATING (HOT-DIP GALVANIZED) ON IRON AND STEEL HARDWARE - ASTM A153.
   C. SPECIFICATION FOR ZINC COATING (HOT-DIP) ON ASSEMBLED STEEL PRODUCTS - ASTM A123, GR. 100.
   D. PRIOR TO GALVANIZING, ALL WELDED CONNECTIONS SHALL BE SEALED ALL AROUND WITH A SEAL WELD. BOLTED CONNECTIONS SHALL NOT BE MADE PRIOR TO GALVANIZING.
   E. DAMAGED OR MISSING COATINGS SHALL BE REPAIRED PER ASTM A780-01 USING ZINC DUST-ZINC OXIDE PRIMER CONFORMING TO MILITARY SPECIFICATION MIL-P-21035.
   F. MINIMUM HOT-DIP GALVANIZING THICKNESS SHALL BE GRADE 100, 2.3 OZ PER SQ. FT., FASTENERS THAT CANNOT MEET THIS REQUIREMENT SHALL BE TYPE 316 STAINLESS STEEL.

WOOD

WOOD

1. LUMBER
   A. ALL LUMBER EXPOSED TO WEATHER SHALL BE SOUTHERN YELLOW PINE PRESSURE TREATED TO 0.40 lb RETENTION, PER AWPA STANDARDS, OR MARINE GRADE UC5B, HAVING THE FOLLOWING MINIMUM PROPERTIES:
      a. E = 1,600,000 psi
      b. F_b = 1500/1250/1200/1050/975 psi (4"/6"/8"/10"/12" SECTIONS RESPECTIVELY)
      c. $F_{c\ PERP}$ = 565 psi
      d. $F_{c\ PARALLEL}$ = 1650 psi
      e. F_v = 175 psi
   B. ALL EXTERIOR WALL FRAMING SHALL BE FIRE RETARDANT TREATED (FRT) LUMBER WITH THE FOLLOWING MINIMUM PROPERTIES AFTER TREATMENT (MINIMUM STRENGTH ADJUSTMENT FACTORS INDICATED IN PARENTHESIS):
      a. E = 1,300,000 psi (0.93)
      b. F_b = 770 psi (0.89)
      c. $F_{c\ PERP}$ = 400 psi (0.94)
      d. F_v = 125 psi (0.93)
   C. ALL LUMBER SHALL BEAR VISIBLE GRADE STAMPING.
   D. EXCEPT AS UPGRADED ON PLANS AND DETAILS, ALL LUMBER SHALL BE NAILED IN ACCORDANCE WITH THE SPECIFIED NAILING SCHEDULE.
   E. JOISTS SHALL BE FASTENED TO STEEL GIRDERS BY EITHER OF TWO ACCEPTABLE METHODS AS FOLLOWS EXCEPT AS NOTED AT "TIMBER CONNECTORS" BELOW:
      a. CONTINUOUS 2 x 6 NAILER PLATE SHALL BE BOLTED TO THE TOP FLANGE OF STEEL WITH 1/2" DIAM. STAINLESS STEEL BOLTS AT 4'-0" ON CENTER, ON ALTERNATE SIDES OF WEB. JOISTS SHALL BE TOENAILED TO PLATE WITH 3-8d NAILS PER JOIST. JOISTS FRAMING FROM OPPOSITE SIDES SHALL LAP AT LEAST SIX INCHES, AND BE SPIKED TOGETHER AND BLOCKED.
      b. A CONTINUOUS 2 x 4 NAILER PLATE SHALL BE BOLTED ABOVE THE BOTTOM FLANGE OF STEEL MEMBER WITH 1/2 INCH DIAM. BOLTS AT 4'-0" ON CENTER. JOISTS SHALL BE NOTCHED ON TOP TO PROVIDE CLEARANCE OF TOP FLANGE AND TO PROVIDE A SPACE OF AT LEAST 3/4" BETWEEN STEEL AND SUBFLOOR. MAXIMUM DEPTH OF NOTCH SHALL BE 1/4 THE DEPTH OF JOIST. 20 GAGE METAL TIE OR WOOD SCAB SHALL BE USED TO FASTEN OPPOSITE JOISTS TO ONE ANOTHER. A CONTINUOUS PLYWOOD OR SAWN LUMBER NAILER SHALL BE PROVIDED ON THE TOP FLANGE OF THE STEEL BEAM WITH THE TOP SURFACE FLUSH TO THE TOP OF THE JOISTS.
      c. ALL CONNECTORS SHALL BE HOT-DIPPED GALVANIZED OR 316 STAINLESS STEEL.
2. WOOD STRUCTURAL PANELS (SHEATHING)
   A. ALL PLYWOOD SHALL BE PRESSURE TREATED OR MARINE GRADE AB MARINE 15/32.
   B. PLYWOOD FOR SUBFLOOR (FLOOR SHEATHING OVER WOOD TRUSSES) SHALL BE 3/4" APA RATED TONGUE-AND-GROOVE STURD-I-FLOOR WITH EXPOSURE 1 BOND CALSSIFICATION AND SPAN RATING OF 24. PLYWOOD SHALL BE GLUED AND NAILED TO TOP OF TRUSSES AND WALLS BELOW.
   C. ALL EXTERIOR WALL SHEATHING SHALL BE LP FLAMEBLOCK FIRE RATED OSB SHEATHING (7/16" MINIMUM) OR APPROVED EQUIVALENT.
   D. ALL PLYWOOD AND OSB SHEATHING SHALL HAVE A MAXIMUM MOISTURE CONTENT OF 15%.
   E. PLYWOOD SHALL BE NAILED TO FLOOR AND WALL FRAMING WITH 8d COMMON NAILS AT 6" ON CENTER AT EXTERIOR EDGES AND 12" ON CENTER AT INTERMEDIATE SUPPORTS UNLESS OTHERWISE NOTED.
   F. USE PLYCLIPS OR OTHER EDGE SUPPORTS FOR ALL PLYWOOD ROOF SHEATHING.
   G. PLACE FACE GRAIN IN DIRECTION OF SPAN (TRANSVERSE TO JOIST OR TRUSS SPAN).
   H. LEAVE 1/16" SPACE AT ALL PLYWOOD PANEL END JOINTS AND 1/8" SPACE AT ALL PANEL EDGE JOINTS (EXCEPT TONGUE AND GROOVE PLYWOOD).
3. LAMINATED VENEER LUMBER (LVL)
   A. LAMINATED VENEER LUMBER BEAMS OR POSTS INDICATED ON DRAWINGS SHALL HAVE THE MINIMUM FOLLOWING PROPERTIES:
   B. LAMINATED VENEER LUMBER (LVL):
      a. E = 2,000,000 psi
      b. F_b = 2,600 psi FOR 12" DEPTH (MULTIPLY BY [12 / d] 0.136/ FOR OTHER DEPTHS "d")
      c. F_t = 1,555 psi
      d. $F_{c\ PERP}$ = 750 psi
      e. $F_{c\ PARALLEL}$ = 2,510 psi
      f. F_v = 285 psi
   C. BEAMS MUST BE LATERALLY SUPPORTED AT TOP.
   D. MINIMUM BEARING LENGTH SHALL BE MINIMUM OF 1-1/2" AT ENDS, AND 3" AT INTERMEDIATE SUPPORT.
   E. MULTIPLE MEMBERS SHALL BE FASTENED TOGETHER IN ACCORDANCE WITH MANUFACTURER'S SPECIFICATIONS.
4. WOOD CONSTRUCTION CONNECTORS.
   A. JOIST HANGERS, FRAMING ANCHORS & RAFTER ANCHORS SHALL BE MINIMUM 18 GAGE PRIME GALVANIZED STEEL AS MANUFACTURED BY TECO, SIMPSON, OR APPROVED EQUAL. SPECIAL NAILS AS SUPPLIED BY MANUFACTURER SHALL BE USED FOR REQUIRED NAILING.
   B. METAL CROSS BRIDGING SHALL BE GALVANIZED STEEL AS MANUFACTURED BY TECO, SIMPSON OR APPROVED EQUAL, AND INSTALLED IN ACCORDANCE WITH MANUFACTURERS DIRECTIONS.
   C. JOISTS SHALL BE ANCHORED TO MASONRY WALLS NO LESS THAN EVERY 4 FEET USING TWISTED STRAP ANCHORS CONNECTING A MINIMUM OF THREE JOISTS.
   D. PROVIDE CONNECTORS THAT ARE HOT-DIPPED GALVANIZED OR 316 STAINLESS STEEL FOR CONNECTION TO FIRE RETARDANT TREATED OR PRESSURE PRESERVATIVE TREATED LUMBER.

POST-INSTALLED ANCHORS

POST-INSTALLED ANCHORAGES

1. POST-INSTALLED ANCHORS SHALL BE INSTALLED INTO SOUND CONCRETE AND MASONRY AND INSPECTED IN ACCORDANCE WITH THE MANUFACTURER'S REQUIREMENTS, THE BUILDING CODE AND ACI 318, SECTION D.9.
2. POST-INSTALLED ANCHORS MUST BE INSTALLED BY AN ACI/CRSI CERTIFIED INSTALLER (OR APPROVED EQUAL CERTIFICATION). THE EOR MUST RECEIVE DOCUMENTED CONFIRMATION THAT ALL OF THE CONTRACTOR'S PERSONNEL WHO INSTALL ANCHORS ARE TRAINED PRIOR TO THE COMMENCEMENT OF INSTALLING ANCHORS.
3. POST-INSTALLED ANCHORS SHALL MEET THE TESTING REQUIREMENTS OF ACI 355.2 FOR MECHANICAL ANCHORS AND 355.4 FOR ADHESIVE ANCHORS AND SHALL BE ICC CERTIFIED.
4. ALL ADHESIVE ANCHOR INSTALLATIONS SHALL USE A PISTON PLUG TO ENSURE COMPLETE FILLING OF DRILL HOLE.
5. WHERE INDICATED ON PLAN, ANCHORS SHALL BE TENSION TESTED IN ACCORDANCE WITH ICBM E 488 TO (5 KIPS/ULTIMATE CAPACITY) UNDER THE SUPERVISION OF THE ANCHOR MANUFACTURER. CONTRACTOR SHALL PATCH BACK CONCRETE AS NECESSARY AT EACH TEST LOCATION.
6. THE ANCHOR MANUFACTURER SHALL PROVIDE A "SHEAR CORRELATION FACTOR" BASED ON THE TENSION TESTS PERFORMED. IF A SHEAR CORRELATION FACTOR CANNOT BE SUPPLIED, A SHEAR TEST SHALL BE PERFORMED ALONG WITH THE TENSION TEST AT EACH LOCATION SPECIFIED.
7. A SUMMARY REPORT OF THE TEST RESULTS SHALL BE PROVIDED TO THE EOR FOR THEIR REVIEW AND GUIDANCE ON ANY MODIFICATIONS REQUIRED TO THE ANCHORAGE DESIGN SPECIFIED.
8. ALL ANCHORS AND ACCESSORIES SHALL BE HOT-DIPPED GALVANIZED OR 316 STAINLESS STEEL.

MISCELLANEOUS

MISC STRUCTURAL NOTES

1. ALUMINUM
   A. ALL STRUCTURAL ALUMINUM MATERIAL, FABRICATION, AND ERECTION SHALL COMPLY WITH THE REQUIREMENTS OF "SPECIFICATIONS FOR ALUMINUM STRUCTURES," OF THE ALUMINUM ASSOCIATION, LATEST EDITION.
   B. MATERIAL: 6061-T6 FOR SHAPES; 6061-T6 OR 6061-T651 FOR PLATES.
   C. TUBULAR FABRICATION: CAP ALL OPEN ENDS USING PLATES EQUALING THICKNESS OF TUBE, UNLESS OTHERWISE NOTED. FIT TUBES BY MITERING AT ELBOW-TYPE CORNERS, UNLESS OTHERWISE NOTED. USE CRUSH PLATES AT THRU BOLTED CONNECTIONS. CRUSH PLATE THICKNESS SHALL EQUAL OR EXCEED TUBE THICKNESS, UNLESS OTHERWISE NOTED.
   D. SHOP AND ERECTION DRAWINGS SHALL BE SUBMITTED TO THE STRUCTURAL ENGINEER FOR REVIEW AND APPROVAL. NO FABRICATION OF ALUMINUM SHALL COMMENCE WITHOUT APPROVED SHOP DRAWINGS. SHOP DRAWINGS ARE PREPARED AND USED BY THE CONTRACTOR AS INSTRUMENTS TO SEQUENCE HIS WORK AND TO FACILITATE FABRICATION AND ERECTION. REVIEW OF SHOP DRAWINGS SHALL BE FOR GENERAL DETAIL AND ARRANGEMENT ONLY. CONTRACTOR SHALL BEAR FULL RESPONSIBILITY FOR DIMENSIONS, PROPER FIT AND DETAILED DESIGN OF CONNECTIONS. THEIR APPROVAL BY THE STRUCTURAL ENGINEER IS NOT TO BE CONSTRUED AS A WAIVER OF CONSTRUCTION CONTRACT REQUIREMENTS OR RESPONSIBILITIES, UNLESS THE CONTRACTOR HAS BEEN GRANTED A DEVIATION IN WRITING.
   E. ALL STEEL IN CONTACT WITH ALUMINUM SHALL BE COATED BEFORE ATTACHING ALUMINUM.
   F. FASTENERS IN DIRECT CONTACT WITH ALUMINUM SHALL BE CADMIUM PLATED, GALVANIZED, OR STAINLESS STEEL.
   G. ALL ALUMINUM WELDING SHALL COMPLY WITH AWS D1.2 "STRUCTURAL WELDING CODE-ALUMINUM", LATEST EDITION. USE 5356 SERIES ELECTRODES, TYPICALLY.

Key Plan

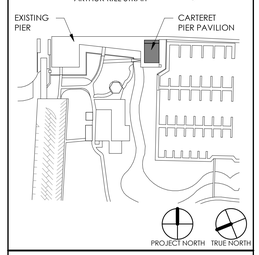

PROJECT

CARTERET PAVILION

CARTERET, NJ

GEOTECHNICAL & STRUCTURAL ENGINEER

McLaren ENGINEERING GROUP

McLaren Technical Services, Inc.

530 Chestnut Ridge Road
Woodcliff Lake, New Jersey 07677
201.775.6000 | www.mgmclaren.com

MEP ENGINEER

KeRi ENGINEERING PC

911 SPRINGFIELD ROAD, SUITE 2
UNION, NEW JERSEY 07083
973.866.5374
INFO@KERIENGINEERING.COM

CIVIL ENGINEER

CVE ASSOCIATES Consulting & Municipal ENGINEERS

1460 RT. 9 SOUTH
HOWELL, NEW JERSEY 07731
732.462.7400
INFO@CMEUSA1.COM

FOOD SERVICE DESIGN CONSULTANT

RAYMOND/RAYMOND ASSOCIATES
FOOD SERVICE CONSULTANTS SINCE 1936

44 ST. JOHN STREET
GOSHEN, NEW YORK
845.360.5112
INFO@RRADESIGNS.COM

DMR

ARCHITECTURE
PLANNING
ENGINE

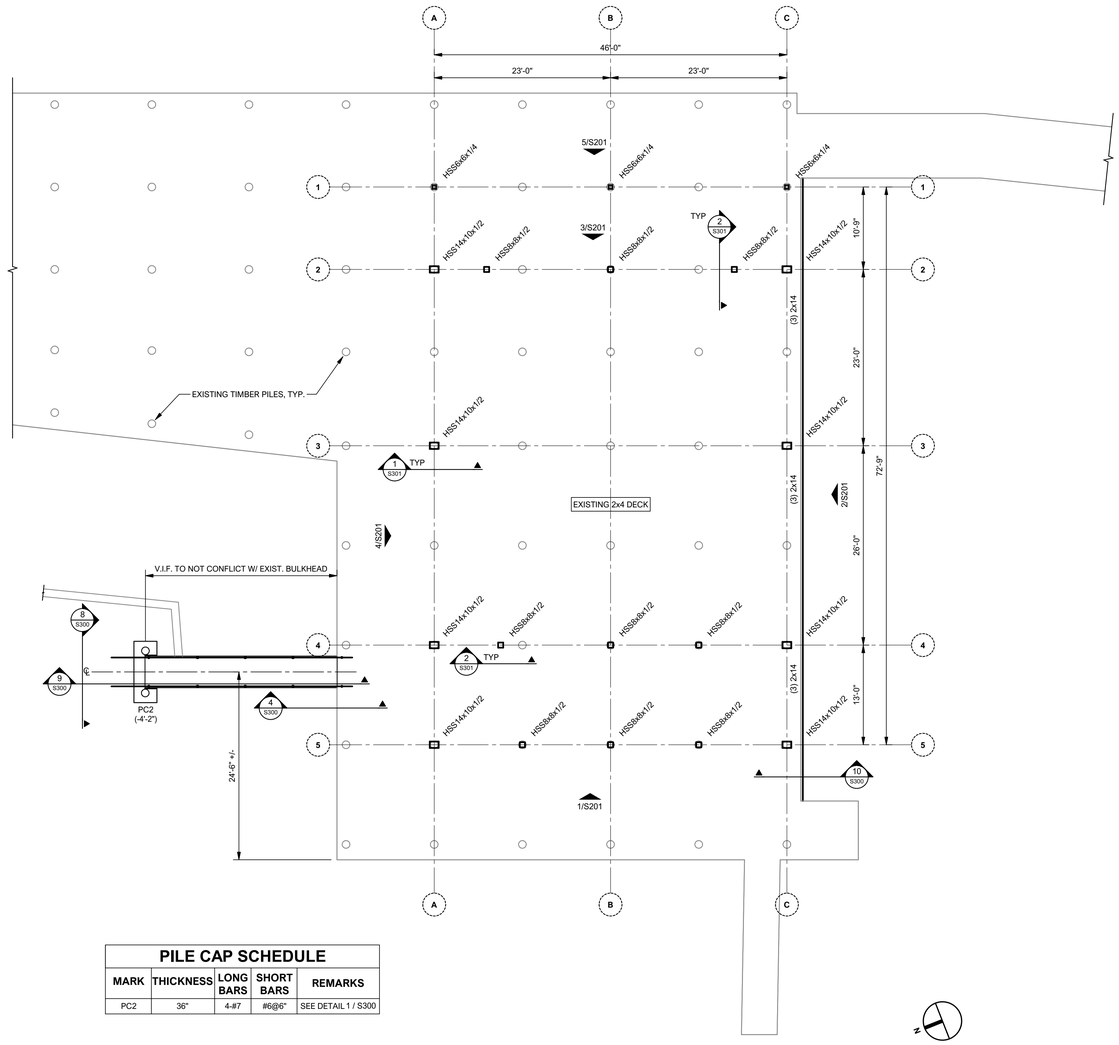

PILE CAP SCHEDULE				
MARK	THICKNESS	LONG BARS	SHORT BARS	REMARKS
PC2	36"	4-#7	#6@6"	SEE DETAIL 1 / S300

PAVILION PLAN

1/8" = 1'-0"

PAVILION PLAN NOTES

1. DATUM ELEVATION = 0'-0"
   A. ELEVATIONS INDICATED ON PLAN THUS: (-1") ARE IN RELATION TO THIS DATUM ELEVATION.
2. (X'-X") INDICATES B.O. PILE CAP ELEVATION.
3. REFER TO ARCHITECTURAL DRAWINGS FOR LOCATIONS AND EXTENTS OF SLABS.
4. SEE S-300 THROUGH S-302 FOR TYPICAL DETAILS.
5. ALL STEEL AND ACCESSORIES TO BE HOT-DIP GALVANIZED. REFER TO NOTE 4 OF STRUCTURAL STEEL GENERAL NOTES ON S-002.
6. SISTER WOOD FRAMING BELOW DECK BENEATH ALL NON-STRUCTURAL PARTITION WALLS SIMILAR TO DETAIL 2/S-300.

Key Plan

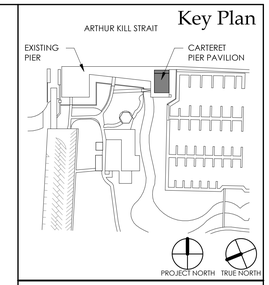

PROJECT

CARTERET PAVILION

CARTERET, NJ

GEOTECHNICAL & STRUCTURAL ENGINEER

McLaren ENGINEERING GROUP

McLaren Technical Services, Inc.

530 Chestnut Ridge Road
Woodcliff Lake, New Jersey 07677
201.775.6000 | www.mgmclaren.com

MEP ENGINEER

KeRi ENGINEERING PC

911 SPRINGFIELD ROAD, SUITE 2
UNION, NEW JERSEY 07083
973.866.5374
INFO@KERIENGINEERING.COM

CIVIL ENGINEER

CME ASSOCIATES Consulting & Municipal ENGINEERS

1460 RT. 9 SOUTH
HOWELL, NEW JERSEY 07731
732.462.7400
INFO@CMEUSA1.COM

FOOD SERVICE DESIGN CONSULTANT

RAYMOND/RAYMOND ASSOCIATES
FOOD SERVICE CONSULTANTS SINCE 1936

44 ST. JOHN STREET
GOSHEN, NEW YORK
845.360.5112
INFO@RRADESIGNS.COM

DMR

ARCHITECTURE
PLANNING
ENGINEERING
INTERIORS
CONSULTING

www.dmrarchitects.com

MEMBERS OF THE AMERICAN INSTITUTE OF ARCHITECTS

LLOYD A. ROSENBERG	NJ - AI 05526
KURT A. VIERHEILIG	NJ - AI 17809
PRADEEP KAPOOR	NY - 042197
FERNANDO ROBLEDO	NY - 033804
JANET PINI	NJ - AI 02102900

RELEASED FOR BID
06.26.2023

NOT VALID FOR BIDDING UNLESS SIGNED AND SEALED BY ARCHITECT

777 Terrace Avenue, 6th Floor
Hasbrouck Heights, New Jersey 07604
Tel 201 - 288 - 2600 || Fax 201 - 288 - 2662

NCARB NATIONAL COUNCIL OF ARCHITECTURAL REGISTRATION BOARDS

CO - 306 184 CT - 05438 NJ - AI 05526
NJ-BOARD OF PROFESSIONAL PLANNERS) - LI 01584
NY - 013023-1 PA - RA - 13437-B

DWG

PAVILION FRAMING PLAN

SCALE As indicated

DATE	DESCRIPTION	DRN	CHK
06.26.2023	RELEASED FOR BID		

REV.	DATE	DESCRIPTION		

PROJECT NO.	SHEET NO.
220485	S100

Copyright © 2022 by DMR

PLOT DATE: 6/27/2023 9:19:47 PM

C:\Users\ptsheng\OneDrive - mgmclaren.com\Documents\220485 - Carteret Pavilion-ptsheng3TNSJ - R20_0 .rvt
6/27/2023 9:19:47 PM

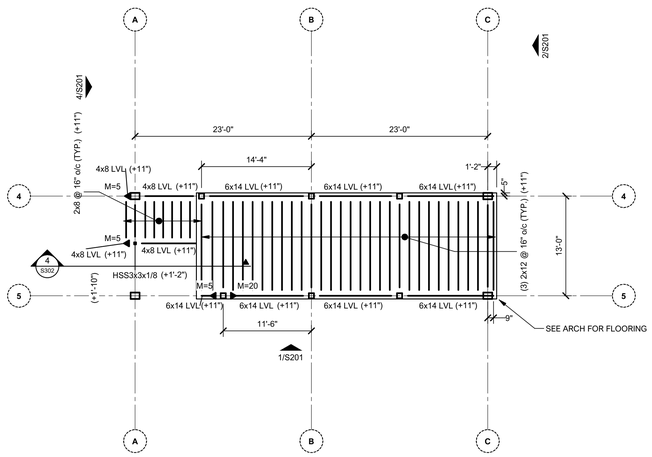

MECHANICAL LOFT PART PLAN

1/8" = 1'-0"

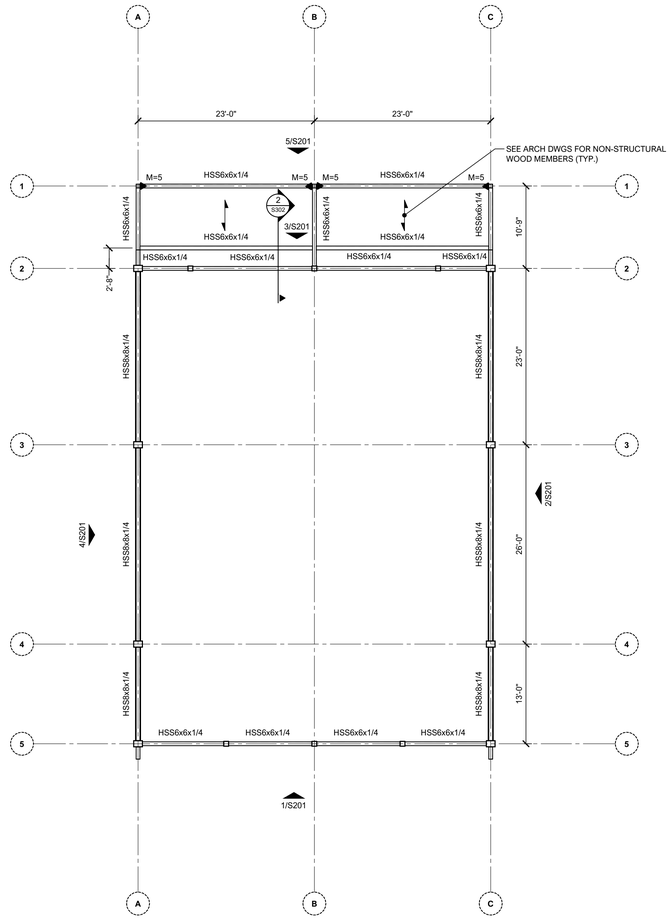

LOW ROOF PLAN

1/8" = 1'-0"

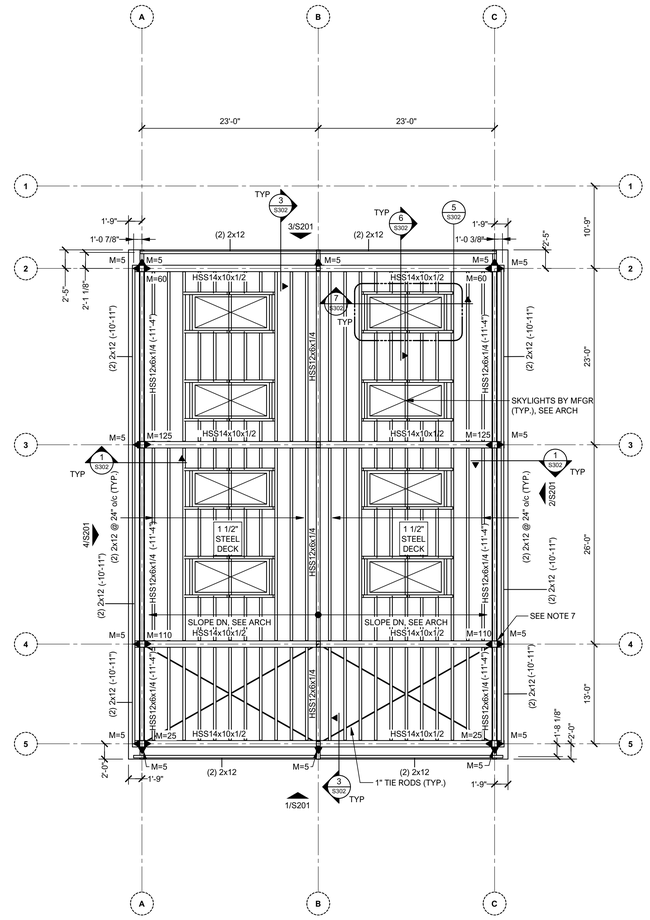

HIGH ROOF PLAN

1/8" = 1'-0"

MECHANICAL LOFT NOTES

1. DATUM ELEVATION = 8'-0"
   A. ELEVATIONS INDICATED ON PLAN THUS: (X'-X") DENOTES ELEVATION OF T.O. BEAM RELATIVE TO DATUM.
2. REFER TO ARCHITECTURAL DRAWINGS FOR LOCATIONS AND EXTENTS OF SLABS.
3. SEE S-300 THROUGH S-302 FOR TYPICAL DETAILS.
4. SEE 9/S-302 FOR SHEAR CONNECTION LOAD TABLES. SEE TABLE 7/S-201 FOR AXIAL LOADS.
5. ALL STEEL AND ACCESSORIES TO BE HOT-DIPPED GALVANIZED. REFER TO NOTE 4 OF STRUCTURAL STEEL GENERAL NOTES ON S-002.
6. REFER TO WOOD GENERAL NOTES ON S-002.

LOW ROOF PLAN NOTES

1. DATUM ELEVATION = 9'-10"
   A. ELEVATIONS INDICATED ON PLAN THUS: (X'-X") DENOTES T.O. STEEL ELEVATION OF BEAM RELATIVE TO DATUM.
2. REFER TO ARCHITECTURAL DRAWINGS FOR LOCATIONS AND EXTENTS OF SLABS.
3. SEE S-300 THROUGH S-302 FOR TYPICAL DETAILS.
4. ALL STEEL AND ACCESSORIES TO BE HOT-DIPPED GALVANIZED. REFER TO NOTE 4 OF STRUCTURAL STEEL GENERAL NOTES ON S-002.
5. SEE 10/S-302 FOR CONNECTION LOAD TABLES.

HIGH ROOF PLAN NOTES

1. DATUM ELEVATION = 23'-10"
   A. ELEVATIONS INDICATED ON PLAN THUS: (X'-X") DENOTES T.O. STEEL ELEVATION OF BEAM RELATIVE TO DATUM.
2. REFER TO ARCHITECTURAL DRAWINGS FOR LOCATIONS AND EXTENTS OF SLABS.
3. SEE S-300 THROUGH S-302 FOR TYPICAL DETAILS.
4. ALL STEEL AND ACCESSORIES TO BE HOT-DIPPED GALVANIZED. REFER TO NOTE 4 OF STRUCTURAL STEEL GENERAL NOTES ON S-002.
5. REFER TO WOOD GENERAL NOTES ON S-002.
6. SEE 9/S-302 AND 10/S-302 FOR CONNECTION LOAD TABLES.
7. HSS POSTS AND HSS ROOF BEAMS SHALL BE CONTINUOUS (TYP.) FOR RIGID FRAME.

Key Plan

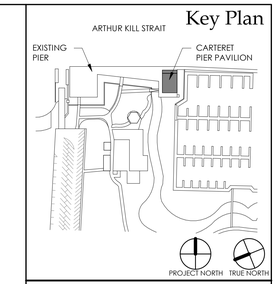

PROJECT

CARTERET PAVILION

CARTERET, NJ

GEOTECHNICAL & STRUCTURAL ENGINEER

McLaren ENGINEERING GROUP

McLaren Technical Services, Inc.
530 Chestnut Ridge Road
Woodcliff Lake, New Jersey 07677
201.775.6000 | www.mgmclaren.com

MEP ENGINEER

KeRi ENGINEERING PC

911 SPRINGFIELD ROAD, SUITE 2
UNION, NEW JERSEY 07083
973.866.5374
INFO@KERIENGINEERING.COM

CIVIL ENGINEER

CVE ASSOCIATES Consulting & Municipal ENGINEERS

1460 RT. 9 SOUTH
HOWELL, NEW JERSEY 07731
732.462.7400
INFO@CMEUSA1.COM

FOOD SERVICE DESIGN CONSULTANT

RAYMOND/RAYMOND ASSOCIATES
FOOD SERVICE CONSULTANTS SINCE 1936

44 ST. JOHN STREET
GOSHEN, NEW YORK
845.360.5112
INFO@RRADESIGNS.COM

DMR
ARCHITECTURE
PLANNING
ENGINEERING
INTERIORS
CONSULTING
www.dmrarchitects.com

MEMBERS OF THE AMERICAN INSTITUTE OF ARCHITECTS

LLOYD A. ROSENBERG	NJ - AI 05526
KURT A. VIERHEILIG	NJ - AI 17809
PRADEEP KAPOOR	NY - 042197
FERNANDO ROBLEDO	NY - 033804
JANET PINI	NJ - AI 02102900

RELEASED FOR BID
06.26.2023

NOT VALID FOR BIDDING UNLESS SIGNED AND SEALED BY ARCHITECT

777 Terrace Avenue, 6th Floor
Hasbrouck Heights, New Jersey 07604
Tel 201 - 288 - 2600 || Fax 201 - 288 - 2662

NCARB NATIONAL COUNCIL OF ARCHITECTURAL REGISTRATION BOARDS

CO - 306 184 CT - 05438 NJ - AI 05526
NJ-BOARD OF PROFESSIONAL PLANNERS) - LI 01584
NY - 013023-1 PA - RA - 13437-B

DWG

ROOF FRAMING PLAN

SCALE As indicated

DATE	DESCRIPTION	DRN	CHK
06.26.2023	RELEASED FOR BID		

REV.	DATE	DESCRIPTION		

PROJECT NO.	SHEET NO.
220485	S101

Copyright © 2022 by DMR

PLOT DATE: 6/27/2023 9:19:48 PM

C:\Users\cpheng\OneDrive - mgmclaren.com\Documents\220485 - Carteret Pavilion-cpheng3765U - R20_01.rvt
6/27/2023 9:19:48 PM

STEEL COLUMN SCHEDULE

HIGH ROOF																					HIGH ROOF
+23'-10"																					23'-10"
LOW ROOF																					LOW ROOF
+12'-0" ATTIC																					12'-0" ATTIC
+9'-0"	HSS 6x6x1/4	HSS 14x10x1/2	HSS 8x8x1/2	HSS 14x10x1/2	HSS 14x10x1/2	HSS 8x8x1/2	HSS 14x10x1/2	HSS 8x8x1/2	HSS 6x6x1/4	HSS 8x8x1/2	HSS 8x8x1/2	HSS 8x8x1/2	HSS 8x8x1/2	HSS 8x8x1/2	HSS 6x6x1/4	HSS 14x10x1/2	HSS 8x8x1/2	HSS 14x10x1/2	HSS 14x10x1/2	HSS 14x10x1/2	9'-0"
PAVILION	5k	26k	8k	62k	51k	7k	12k	22k	5k	26k	12k	10k	19k	23k	5k	23k	8k	62k	54k	15k	PAVILION
0'-0 1/8"																					0'-0 1/8"
COLUMN LOCATIONS	A-1	A-2	A(6'-10")-2	A-3	A-4	A(8'-8")-4	A-5	A(11'-6")-5	B-1	B-2	B-4	B(11'-6")-4	B-5	B(11'-6")-5	C-1	C-2	C(-6'-10" 5/16")-2	C-3	C-4	C-5	
BASE PLATE & ANCHOR BOLTS DETAIL	1/S-301	1/S-301	2/S-301	1/S-301	1/S-301	2/S-301	1/S-301	1/S-301	1/S-301	1/S-301	1/S-301	1/S-301	1/S-301	1/S-301	1/S-301	1/S-301	2/S-301	1/S-301	1/S-301	1/S-301	

STEEL COLUMN SYMBOL LEGEND

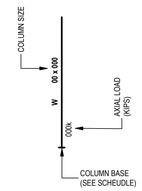

NOTES

1. COLUMN LOADS SHOWN IN SCHEDULE ARE UNFACTORED FORCES (ASD) AND SHOWN IN KIPS. TENSION CONDITIONS ARE INDICATED THUS (-000k).
2. COLUMNS AND BASE PLATES SHALL BE FULLY MILLED FOR BEARING.
3. SEE PLAN FOR COLUMN ORIENTATION.
4. SEE 1/S-301 & 2/S-302 FOR BASE PLATE DETAILS.

Key Plan

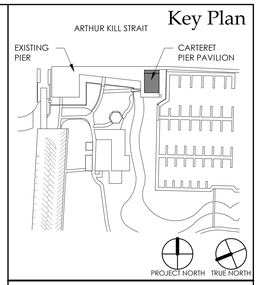

PROJECT

CARTERET PAVILION

CARTERET, NJ

GEOTECHNICAL & STRUCTURAL ENGINEER

McLaren ENGINEERING GROUP

McLaren Technical Services, Inc.
530 Chestnut Ridge Road
Woodcliff Lake, New Jersey 07677
201.775.6000 | www.mgmclaren.com

MEP ENGINEER

KeRi ENGINEERING PC

911 SPRINGFIELD ROAD, SUITE 2
UNION, NEW JERSEY 07083
973.866.5374
INFO@KERIENGINEERING.COM

CIVIL ENGINEER

CME ASSOCIATES Consulting & Municipal ENGINEERS

1460 RT. 9 SOUTH
HOWELL, NEW JERSEY 07731
732.462.7400
INFO@CMEUSA1.COM

FOOD SERVICE DESIGN CONSULTANT

RAYMOND/RAYMOND ASSOCIATES
FOOD SERVICE CONSULTANTS SINCE 1936

44 ST. JOHN STREET
GOSHEN, NEW YORK
845.360.5112
INFO@RRADESIGNS.COM

DMR

ARCHITECTURE
PLANNING
ENGINEERING
INTERIORS
CONSULTING

www.dmrarchitects.com

MEMBERS OF THE AMERICAN INSTITUTE OF ARCHITECTS

LLOYD A. ROSENBERG	NJ - AI 05526
KURT A. VIERHEILIG	NJ - AI 17809
PRADEEP KAPOOR	NY - 042197
FERNANDO ROBLEDO	NY - 033804
JANET PINI	NJ - AI 02102900

RELEASED FOR BID
06.26.2023

NOT VALID FOR BIDDING UNLESS SIGNED AND SEALED BY ARCHITECT

777 Terrace Avenue, 6th Floor

Hasbrouck Heights, New Jersey 07604

Tel 201 - 288 - 2600 || Fax 201 - 288 - 2662

NCARB NATIONAL COUNCIL OF ARCHITECTURAL REGISTRATION BOARDS

CO - 306 184 CT - 05438 *NJ - AI 05526*
NJ-BOARD OF PROFESSIONAL PLANNERS) - LI 01584
NY - 013023-1 PA - RA - 13437-B

DWG

COLUMN SCHEDULE

SCALE 1/8" = 1'-0"

DATE	DESCRIPTION	DRN	CHK
06.26.2023	RELEASED FOR BID		

REV.	DATE	DESCRIPTION		

PROJECT NO. 220485

SHEET NO. S200

Copyright © 2022 by DMR

PLOT DATE: 6/27/2023 9:19:49 PM

C:\Users\ptheng\OneDrive - mgmclaren.com\Documents\220485 - Carteret Pavilion-ptheng37NSJ - R20_01.rvt
6/27/2023 9:19:49 PM

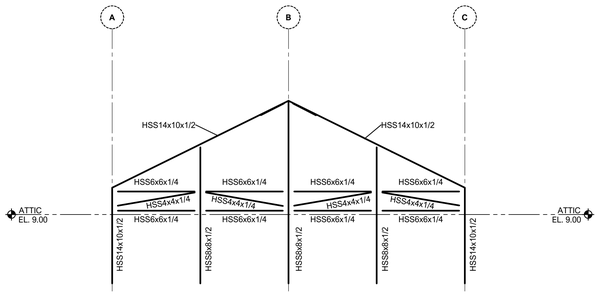

1 PAVILION ELEVATION 1
S201 N.T.S.

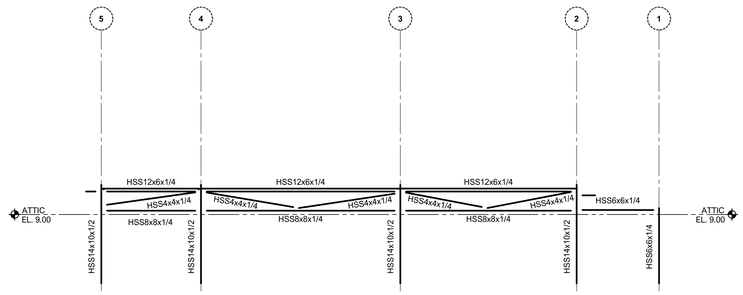

2 PAVILION ELEVATION 2
S201 N.T.S.

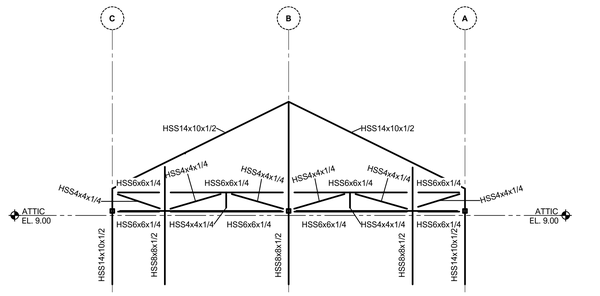

3 PAVILION ELEVATION 3
S201 N.T.S.

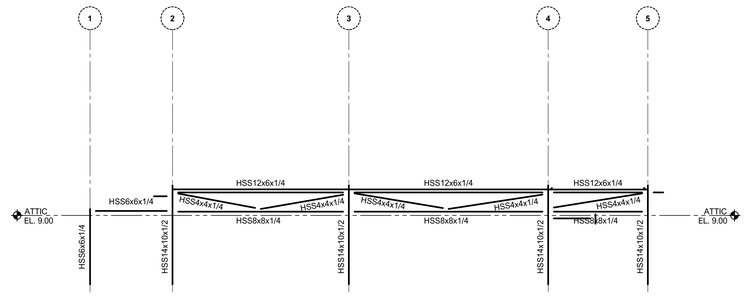

4 PAVILION ELEVATION 4
S201 N.T.S.

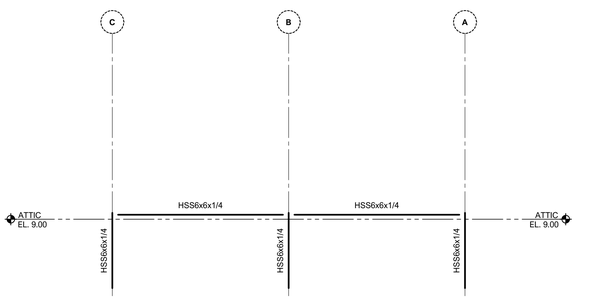

5 PERGOLA ELEVATION
S201 N.T.S.

TABLE 1 AXIAL CONNECTION LOADS - STEEL	
BEAM SIZE	MIN. AXIAL CAPACITY (ASD)
HSS4x4	35 k
HSS6x6	45 k
HSS8x8	25 k
HSS12x6	5 k
HSS14x10	75 k

6 LATERAL FRAME LOAD TABLES - STEEL
S201 N.T.S.

TABLE 2 AXIAL CONNECTION LOADS - WOOD	
BEAM SIZE	MIN. AXIAL CAPACITY (ASD)
2x8, 2x12, (2) & (3) 2x12	5 k
4x8 LVL	20 k
6x14 LVL	25 k

7 LATERAL FRAME LOAD TABLES - WOOD
S201 N.T.S.

Key Plan

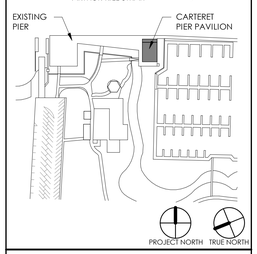

PROJECT
CARTERET PAVILION
CARTERET, NJ

GEOTECHNICAL & STRUCTURAL ENGINEER
McLaren ENGINEERING GROUP
McLaren Technical Services, Inc.
530 Chestnut Ridge Road
Woodcliff Lake, New Jersey 07677
201.775.6000 | www.mgmclaren.com

MEP ENGINEER
KeRi ENGINEERING PC
911 SPRINGFIELD ROAD, SUITE 2
UNION, NEW JERSEY 07083
973.866.5374
INFO@KERIENGINEERING.COM

CIVIL ENGINEER
CME ASSOCIATES Consulting & Municipal ENGINEERS
1460 RT. 9 SOUTH
HOWELL, NEW JERSEY 07731
732.462.7400
INFO@CMEUSA1.COM

FOOD SERVICE DESIGN CONSULTANT
RAYMOND/RAYMOND ASSOCIATES
FOOD SERVICE CONSULTANTS SINCE 1936
44 ST. JOHN STREET
GOSHEN, NEW YORK
845.360.5112
INFO@RRADESIGNS.COM

DMR
ARCHITECTURE
PLANNING
ENGINEERING
INTERIORS
CONSULTING
www.dmrarchitects.com

MEMBERS OF THE AMERICAN INSTITUTE OF ARCHITECTS

LLOYD A. ROSENBERG	NJ - AI 05526
KURT A. VIERHEILIG	NJ - AI 17809
PRADEEP KAPOOR	NY - 042197
FERNANDO ROBLEDO	NY - 033804
JANET PINI	NJ - AI 02102900

RELEASED FOR BID
06.26.2023

NOT VALID FOR BUILDING UNLESS SIGNED AND SEALED BY ARCHITECT

777 Terrace Avenue, 6th Floor
Hasbrouck Heights, New Jersey 07604
Tel 201 - 288 - 2600 || Fax 201 - 288 - 2662

NCARB NATIONAL COUNCIL OF ARCHITECTURAL REGISTRATION BOARDS
CO - 306 184 CT - 05438 NJ - AI 05526
NJ-BOARD OF PROFESSIONAL PLANNERS) - LI 01584
NY - 013023-1 PA - RA - 13437-B

DWG
PAVILION ELEVATIONS

SCALE As indicated

DATE	DESCRIPTION	DRN	CHK
06.26.2023	RELEASED FOR BID		

REV.	DATE	DESCRIPTION		

PROJECT NO. 220485
SHEET NO. S201

Copyright © 2022 by DMR
PLOT DATE: 6/27/2023 9:19:50 PM

C:\Users\jstrang\OneDrive - mgmclaren.com\Documents\220485 - Carteret Pavilion-jstrang37NS5J - R20_01.rvt
6/27/2023 9:19:51 PM

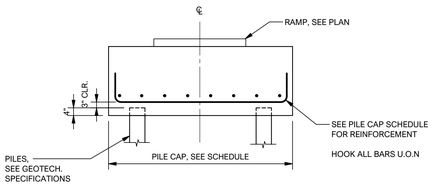

1 PILE CAP ELEVATION
S300 N.T.S.

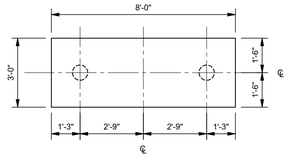

2 PILE CAP PLAN
S300 N.T.S.

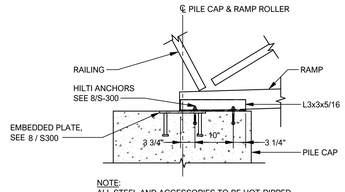

NOTE:
ALL STEEL AND ACCESSORIES TO BE HOT-DIPPED GALVANIZED OR STAINLESS STEEL. REFER TO NOTE 4 OF STRUCTURAL STEEL GENERAL NOTES ON S-002.

3 ANGLE TO PILE CAP CONNECTION
S300 N.T.S.

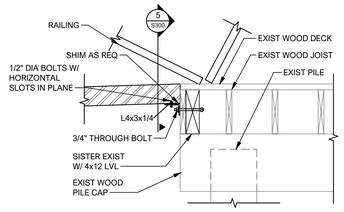

NOTE:
ALL STEEL AND ACCESSORIES TO BE HOT-DIPPED GALVANIZED OR STAINLESS STEEL. REFER TO NOTE 4 OF STRUCTURAL STEEL GENERAL NOTES ON S-002.

4 RAMP SUPPORT
S300 N.T.S.

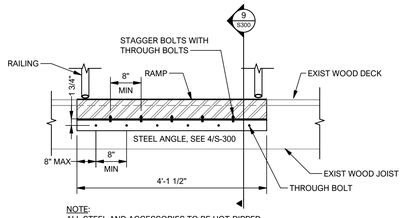

NOTE:
ALL STEEL AND ACCESSORIES TO BE HOT-DIPPED GALVANIZED OR STAINLESS STEEL. REFER TO NOTE 4 OF STRUCTURAL STEEL GENERAL NOTES ON S-002.

5 RAMP SUPPORT ELEVATION
S300 N.T.S.

TENSION DEVELOPMENT & LAP SPLICE NOTES

1. ALL TENSION DEVELOPMENT & LAP SPLICE CLASSES SHALL BE AS FOLLOWS
   A. CLASS "A" - WHERE INDICATED AS "L_d" OR "CLASS A LAP"
   B. CLASS "B" - ALL OTHER CASES, INCLUDING WHERE INDICATED AS "TLS" OR "CLASS B LAP"
2. TABULATED VALUES ARE FOR NON-COATED REBAR IN NORMAL WEIGHT CONCRETE
   A. FOR EPOXY-COATED BARS, MULTIPLY TABULATED LENGTHS BY 1.5
   B. FOR LIGHTWEIGHT CONCRETE, MULTIPLY LENGTHS BY 1.33
3. TABULATED VALUES ASSUME THE FOLLOWING REINFORCING YEILD STRENGTH:
   A. #10 & SMALLER BARS: Fy = 60,000 PSI
   B. #11 & LARGER BARS: Fy = 75,000 PSI
4. CASE 1 & 2 DEPEND ON THE TYPE OF STRUCTURAL MEMBER, CONCRETE COVER, AND CENTER-TO-CENTER (c-c) SPACING OF THE BARS:

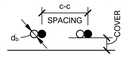

   A. BEAMS & COLUMNS (BARS ENCLOSED IN TIES OR STIRRUPS):
      a. CASE 1: COVER ≥ 1.0 d_b c-c SPACING ≥ 2.0 d_b
      b. CASE 2: COVER < 1.0 d_b c-c SPACING < 2.0 d_b
   B. SLABS, WALLS, FOOTINGS, & OTHER MEMBERS (NOT ENCLOSED IN TIES OR STIRRUPS):
      a. CASE 1: COVER ≥ 1.0 d_b c-c SPACING ≥ 3.0 d_b
      b. CASE 2: COVER < 1.0 d_b c-c SPACING < 3.0 d_b
5. "TOP BARS" ARE HORIZONTAL BARS WITH GREATER THAN 12" OF CONCRETE CAST BELOW.
6. FOR #14 AND #18 BARS SPLICED TO SAME SIZE BARS OR LARGER, LAP SPLICES ARE NOT PERMITTED. PROVIDE WELDED SPLICE OR MECHANICAL BAR COUPLER.

5,000 psi CONCRETE TENSION DEVELOPMENT & LAP SPLICE LENGTHS

BAR SIZE	CLASS	MEMBER / COVER / SPACING CASE (NOTE 4)			
		CASE 1		CASE 2	
		TOP BARS	OTHER BARS	TOP BARS	OTHER BARS
#3	A	17"	13"	25"	19"
	B	22"	17"	33"	25"
#4	A	22"	17"	33"	26"
	B	29"	22"	43"	33"
#5	A	28"	22"	42"	32"
	B	36"	28"	54"	42"
#6	A	33"	26"	50"	28"
	B	43"	33"	65"	50"
#7	A	49"	37"	73"	56"
	B	63"	49"	94"	73"
#8	A	55"	43"	83"	64"
	B	72"	55"	108"	83"
#9	A	63"	48"	94"	72"
	B	81"	63"	122"	94"
#10	A	70"	54"	105"	81"
	B	91"	70"	137"	105"
#11	A	98"	75"	147"	113"
	B	127"	98"	190"	147"
#14	L_d	118"	90"	175"	135"
	-	-	-	-	-
#18	L_d	157"	120"	234"	180"
	-	-	-	-	-

6 CONCRETE TENSION DEVELOPMENT TABLES
S300 N.T.S.

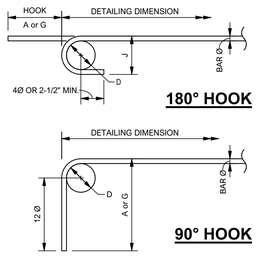

STANDARD HOOKS

BAR SIZE	BEND DIA. "D"	180° HOOKS		90° HKS
		A or G	J	A or G
#3	2-1/4"	5"	3"	6"
#4	3"	6"	4"	8"
#5	3-3/4"	7"	5"	10"
#6	4-1/2"	8"	6"	1'-0"
#7	5-1/4"	10"	7"	1'-2"
#8	6"	11"	8"	1'-4"
#9	9-1/2"	1'-3"	11-3/4"	1'-7"
#10	10-3/4"	1'-5"	13-1/4"	1'-10"
#11	12"	1'-7"	14-3/4"	2'-0"
#14	18-1/4"	2'-3"	21-3/4"	2'-7"
#18	24"	3'-0"	28-12"	3'-5"

7 STANDARD HOOKS
S300 N.T.S.

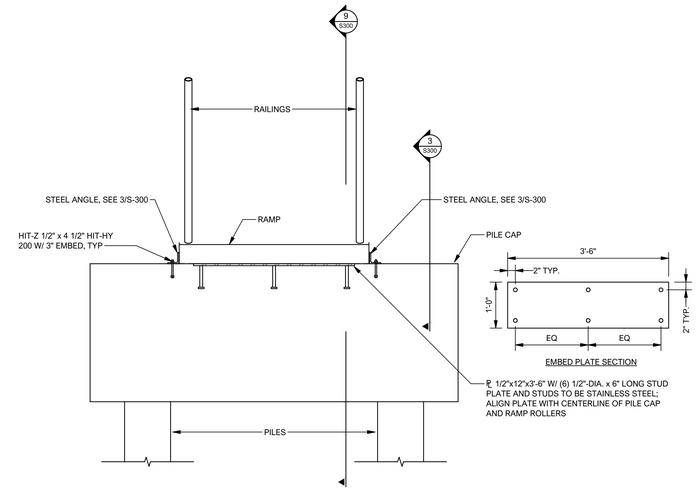

NOTE:
ALL STEEL AND ACCESSORIES TO BE HOT-DIPPED GALVANIZED OR STAINLESS STEEL. REFER TO NOTE 4 OF STRUCTURAL STEEL GENERAL NOTES ON S-002.

8 RAMP TO PILE CAP CONNECTION
S300 N.T.S.

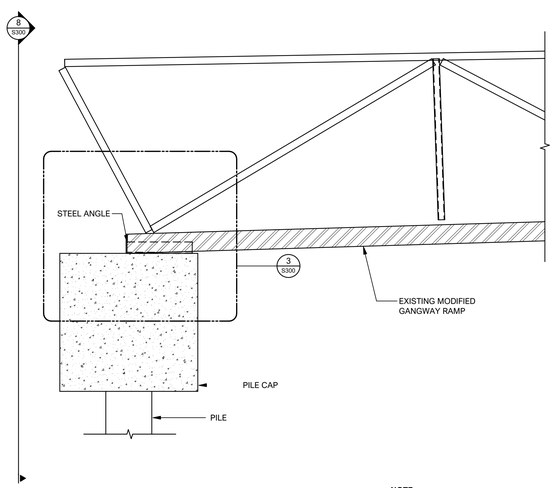

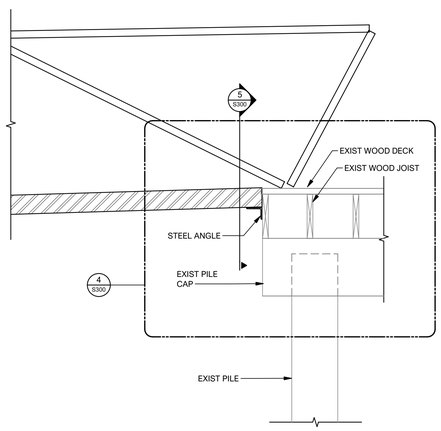

NOTE:
CUT EXISTING GANGWAY RAMP TO ACHIEVE DESIRED TOTAL LENGTH. MODIFY RAILING END AND ATTACH NEW FRAMING FOR TRUSS RAILING TO MATCH OPPOSITE END. SEE ARCH DWGS.

9 RAMP ELEVATION
S300 N.T.S.

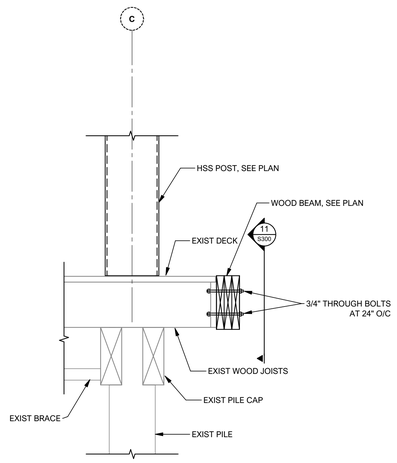

NOTES:
1. CONTRACTOR TO VERIFY EXISTING STRUCTURAL ELEMENT LOCATIONS IN FIELD AND NOTIFY ENGINEER IF ANY DISCREPENCY.
2. TOP OF NEW BEAMS TO BE FLUSH WITH TOP OF EXISTING DECK.
3. ALL STEEL AND ACCESSORIES TO BE HOT-DIPPED GALVANIZED OR STAINLESS STEEL. REFER TO NOTE 4 OF STRUCTURAL STEEL GENERAL NOTES ON S-002.

10 EXTERIOR WALL SUPPORT
S300 N.T.S.

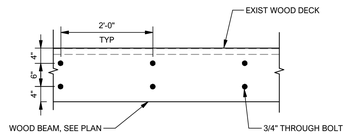

11 CONNECTION TO EXIST WOOD DECK DETAIL
S300 N.T.S.

Key Plan

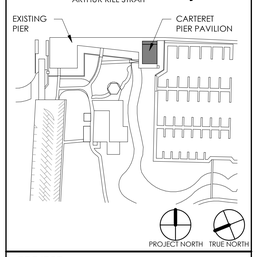

PROJECT
CARTERET PAVILION
CARTERET, NJ

GEOTECHNICAL & STRUCTURAL ENGINEER
McLaren ENGINEERING GROUP
McLaren Technical Services, Inc.
530 Chestnut Ridge Road
Woodcliff Lake, New Jersey 07677
201.775.6000 | www.mgmclaren.com

MEP ENGINEER
KeRi ENGINEERING PC
911 SPRINGFIELD ROAD, SUITE 2
UNION, NEW JERSEY 07083
973.866.5374
INFO@KERIENGINEERING.COM

CIVIL ENGINEER
CME ASSOCIATES Consulting & Municipal ENGINEERS
1460 RT. 9 SOUTH
HOWELL, NEW JERSEY 07731
732.462.7400
INFO@CMEUSA1.COM

FOOD SERVICE DESIGN CONSULTANT
RAYMOND/RAYMOND ASSOCIATES
FOOD SERVICE CONSULTANTS SINCE 1938
44 ST. JOHN STREET
GOSHEN, NEW YORK
845.360.5112
INFO@RRADESIGNS.COM

DMR
ARCHITECTURE
PLANNING
ENGINEERING
INTERIORS
CONSULTING
www.dmrarchitects.com
MEMBERS OF THE AMERICAN INSTITUTE OF ARCHITECTS
LLOYD A. ROSENBERG NJ - AI 05526
KURT A. VIERHEILIG NJ - AI 17809
PRADEEP KAPOOR NY - 042197
FERNANDO ROBLEDO NY - 033804
JANET PINI NJ - AI 02102900

RELEASED FOR BID
06.26.2023

NOT VALID FOR BIDDING UNLESS SIGNED AND SEALED BY ARCHITECT

777 Terrace Avenue, 6th Floor
Hasbrouck Heights, New Jersey 07604
Tel 201 - 288 - 2600 || Fax 201 - 288 - 2662

NCARB NATIONAL COUNCIL OF ARCHITECTURAL REGISTRATION BOARDS

CO - 306 184 CT - 05438 NJ - AI 05526
NJ-BOARD OF PROFESSIONAL PLANNERS) - LI 01584
NY - 013023-1 PA - RA - 13437-B

DWG
TYPICAL DETAILS

SCALE As indicated

DATE	DESCRIPTION	DRN	CHK
06.26.2023	RELEASED FOR BID		

REV.	DATE	DESCRIPTION		

PROJECT NO. 220485
SHEET NO. S300

Copyright © 2022 by DMR

PLOT DATE: 6/27/2023 9:19:51 PM

C:\Users\qzheng\OneDrive - mgmclaren.com\Documents\220485 - Carteret Pavilion-qzheng37NJSJ - R20_01.rvt
6/27/2023 9:19:51 PM

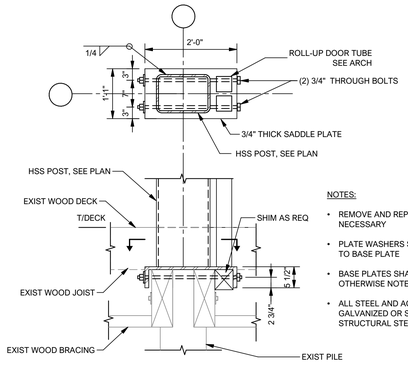

NOTES:

- REMOVE AND REPLACE EXISTING WOOD DECK AS NECESSARY
- PLATE WASHERS SHALL BE ASTM A36 STEEL AND WELDED TO BASE PLATE
- BASE PLATES SHALL BE ASTM A36 STEEL UNLESS OTHERWISE NOTED
- ALL STEEL AND ACCESSORIES TO BE HOT-DIPPED GALVANIZED OR STAINLESS STEEL. REFER TO NOTE 4 OF STRUCTURAL STEEL GENERAL NOTES ON S-002.

1 S301 SADDLE BASEPLATE DETAIL
N.T.S.

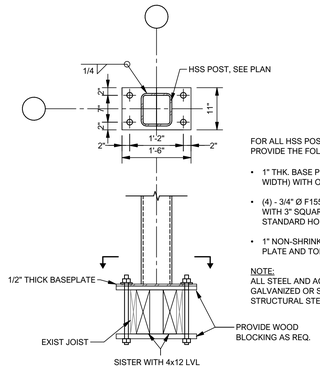

FOR ALL HSS POSTS NOT SPECIFIED ON COLUMN SCHEDULE, PROVIDE THE FOLLOWING UNLESS OTHERWISE NOTED:

- 1" THK. BASE PLATE (SEE PLAN DETAIL FOR LENGTH & WIDTH) WITH OVERSIZED HOLES
- (4) - 3/4" Ø F1554 GR. 55 "WELDABLE" ANCHOR RODS WITH 3" SQUARE x 1/4" PLATE WASHERS WITH STANDARD HOELS.
- 1" NON-SHRINK GROUT BETWEEN BOTTOM OF BASE PLATE AND TOP OF CONCRETE/FOUNDATION

NOTE:
ALL STEEL AND ACCESSORIES TO BE HOT-DIPPED GALVANIZED OR STAINLESS STEEL. REFER TO NOTE 4 OF STRUCTURAL STEEL GENERAL NOTES ON S-002.

2 S301 BASEPLATE DETAIL
N.T.S.

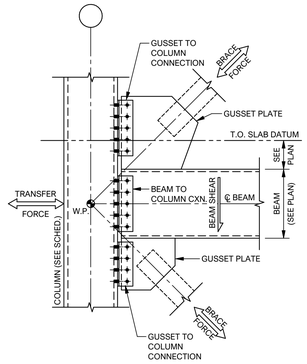

BRACING CONNECTION NOTES

- DETAIL SHOWN FOR SCHEMATIC REFERENCE ONLY. FINAL BRACE/GUSSET CONFIGURATION SHALL BE DETAILED BY THE FABRICATOR AND SUBMITTED FOR APPROVAL BY THE ARCHITECT/ENGINEER.
- BRACING CONNECTIONS SHALL BE EITHER WELDED OR BOLTED USING HIGH STRENGTH SLIP-CRITICAL BOLTS (3/4"Ø MIN.)
- ALL BRACING CONNECTIONS SHALL BE DESIGNED AND DETAILED BY THE STEEL FABRICATOR BASED ON THE FORCES VALUES INDICATED ON FRAMING PLANS OR ELEVATIONS.
- CONNECTION DESIGN CALCULATIONS SHALL BE SUBMITTED FOR REVIEW UNDER SEAL AND SIGNATURE OF A PROFESSIONAL ENGINEER LICENSED IN THE STATE OF THE PROJECT
- CONNECTION DESIGNS SHALL BE BASED ON THE UNIFORM FORCE METHOD FROM PART 13 OF THE AISC MANUAL OF STEEL CONSTRUCTION (SEE GENERAL NOTES FOR EDITION) AND INCLUDES:
  - CONNECTION OF GUSSET PLATE TO BEAM
  - CONNECTION OF GUSSET PLATE TO COLUMN
  - CONNECTION OF BEAM TO COLUMN
- THE DESIGN FORCES (ASD) ARE SHOWN IN THE FOLLOWING LOCATIONS:
  - BEAM SHEAR FORCE, SEE FRAMING PLAN
  - TRANSFER AXIAL FORCE, SEE FRAMING PLAN
  - BRACE AXIAL FORCE: FRAME ELEVATION

  IF DESIGN FORCES ARE NOT SHOWN, PROVIDE A CONNECTION PROPORTIONED FOR THE FULL MEMBER CAPACITY

3 S301 BRACING MAIN KEY DETAIL
N.T.S.

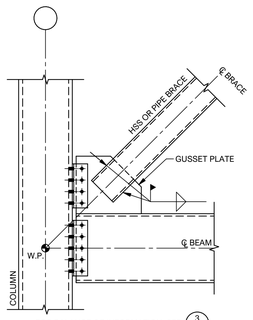

FOR BALANCE OF INFORMATION, SEE 3 S301

4 S301 BRACING AT COL HSS
N.T.S.

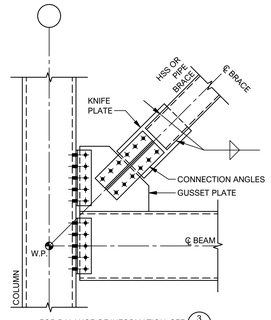

FOR BALANCE OF INFORMATION, SEE 3 S301

5 S301 BRACING AT COL HSS (ALT)
N.T.S.

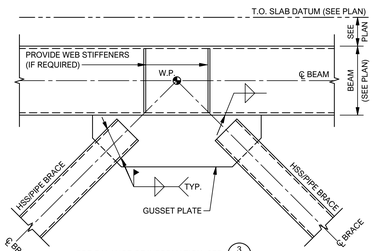

FOR BALANCE OF INFORMATION, SEE 3 S301

6 S301 BRACING CHEVRON HSS
N.T.S.

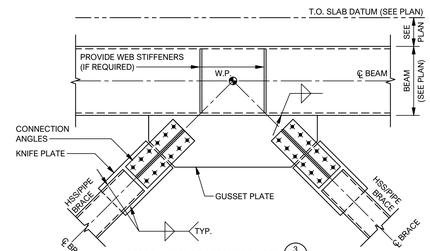

FOR BALANCE OF INFORMATION, SEE 3 S301

7 S301 BRACING CHEVRON HSS (ALT)
N.T.S.

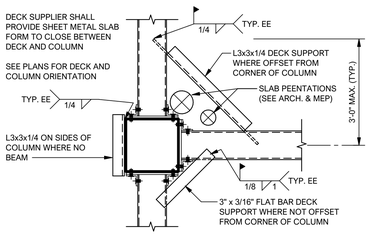

8 S301 DECK SUPPORT AT INTERIOR COLUMN
N.T.S.

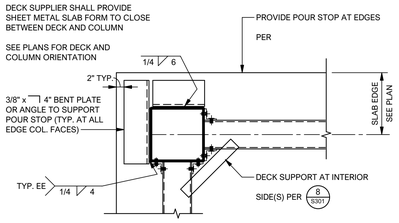

9 S301 DECK SUPPORT AT EDGE/CORNER COLUMN
N.T.S.

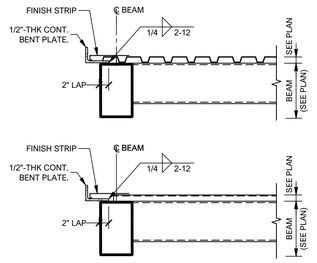

- 20 GAGE, FINISH STRIP TO BE PROVIDED BY METAL DECK SUPPLIER
- FASTEN STRIP TO METAL DECK WITH 1" FILLET WELD OR #10 SHEET METAL SCREWS AT 12" o/c

10 S301 ROOF DECK TYPICAL EDGE DETAIL
N.T.S.

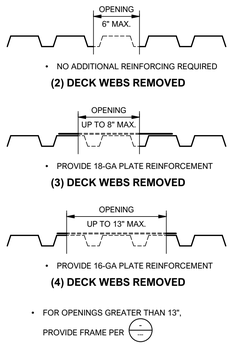

- NO ADDITIONAL REINFORCING REQUIRED

(2) DECK WEBS REMOVED

- PROVIDE 18-GA PLATE REINFORCEMENT

(3) DECK WEBS REMOVED

- PROVIDE 16-GA PLATE REINFORCEMENT

(4) DECK WEBS REMOVED

- FOR OPENINGS GREATER THAN 13", PROVIDE FRAME PER —

11 S301 ROOF DECK OPENING
N.T.S.

Key Plan

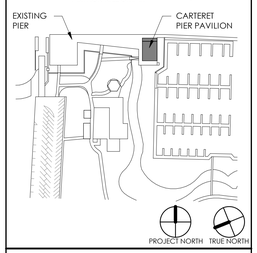

PROJECT
CARTERET PAVILION
CARTERET, NJ

GEOTECHNICAL & STRUCTURAL ENGINEER
McLaren ENGINEERING GROUP
McLaren Technical Services, Inc.
530 Chestnut Ridge Road
Woodcliff Lake, New Jersey 07677
201.775.6000 | www.mgmclaren.com

MEP ENGINEER
KeRi ENGINEERING PC
911 SPRINGFIELD ROAD, SUITE 2
UNION, NEW JERSEY 07083
973.866.5374
INFO@KERIENGINEERING.COM

CIVIL ENGINEER
CME ASSOCIATES Consulting & Municipal ENGINEERS
1460 RT. 9 SOUTH
HOWELL, NEW JERSEY 07731
732.462.7400
INFO@CMEUSA1.COM

FOOD SERVICE DESIGN CONSULTANT
RAYMOND/RAYMOND ASSOCIATES
FOOD SERVICE CONSULTANTS SINCE 1936
44 ST. JOHN STREET
GOSHEN, NEW YORK
845.360.5112
INFO@RRADESIGNS.COM

DMR
ARCHITECTURE
PLANNING
ENGINEERING
INTERIORS
CONSULTING
www.dmrarchitects.com

MEMBERS OF THE AMERICAN INSTITUTE OF ARCHITECTS

LLOYD A. ROSENBERG	NJ - AI 05526
KURT A. VIERHEILIG	NJ - AI 17809
PRADEEP KAPOOR	NY - 042197
FERNANDO ROBLEDO	NY - 033804
JANET PINI	NJ - AI 02102900

RELEASED FOR BID
06.26.2023

NOT VALID FOR BIDDING UNLESS SIGNED AND SEALED BY ARCHITECT

777 Terrace Avenue, 6th Floor
Hasbrouck Heights, New Jersey 07604
Tel 201 - 288 - 2600 || Fax 201 - 288 - 2662

NCARB NATIONAL COUNCIL OF ARCHITECTURAL REGISTRATION BOARDS

CO - 306 184 CT - 05438 NJ - AI 05526
NJ-BOARD OF PROFESSIONAL PLANNERS) - LI 01584
NY - 013023-1 PA - RA - 13437-B

DWG
TYPICAL DETAILS

SCALE As indicated

DATE	DESCRIPTION	DRN	CHK
06.26.2023	RELEASED FOR BID		

REV.	DATE	DESCRIPTION		

PROJECT NO. 220485
SHEET NO. S301

Copyright @ 2022 by DMR

PLOT DATE: 6/27/2023 9:19:52 PM

C:\Users\jstheng\OneDrive - mgmclaren.com\Documents\220485 - Carteret Pavilion-jstheng3TNSJ - R20_01.rvt
6/27/2023 9:19:52 PM

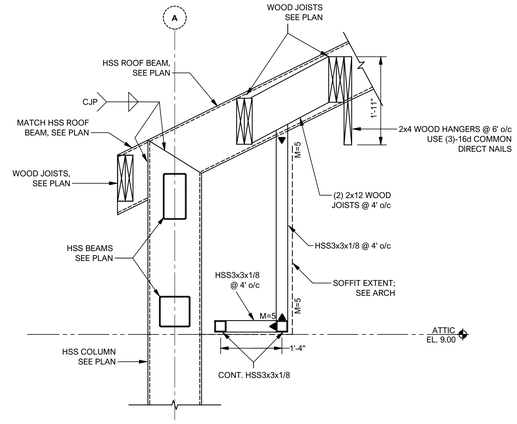

1 SOFFIT FRAMING - SECTION 1
S302 N.T.S.

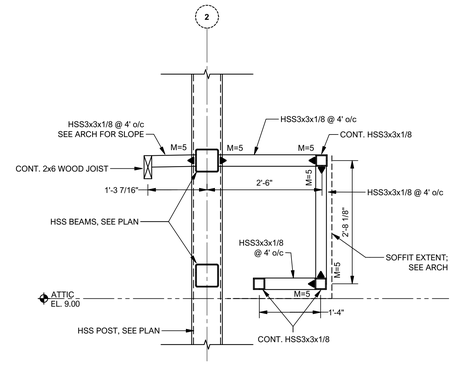

NOTE:
SIMPSON STRONG-TIE CONNECTION OR EQUAL FOR WOOD.
SEE 9/S-302 & 10/S-302 FOR LOAD TABLES.

2 SOFFIT FRAMING - SECTION 2
S302 N.T.S.

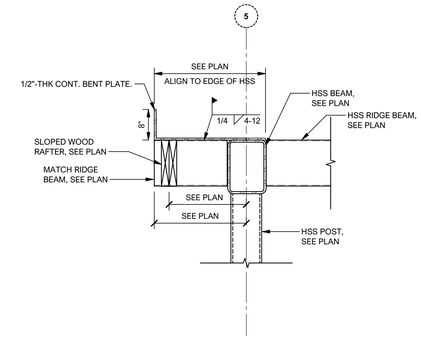

3 FASCIA SUPPORT
S302 N.T.S.

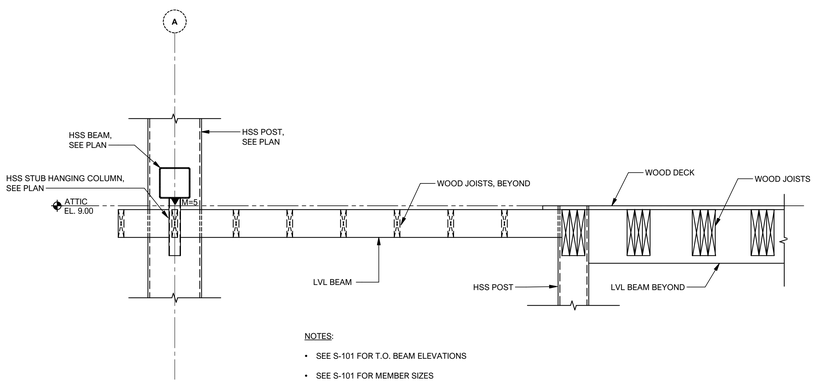

NOTES:

- SEE S-101 FOR T.O. BEAM ELEVATIONS
- SEE S-101 FOR MEMBER SIZES

4 ATTIC FRAMING
S302 N.T.S.

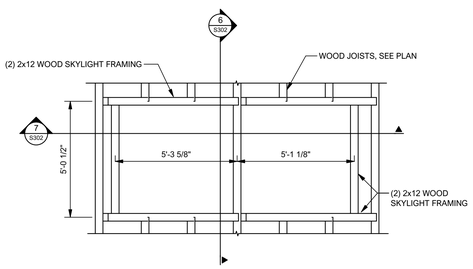

NOTE:
JOISTS SUPPORTING SKYLIGHT TO BE
ALIGNED WITH ROOF PITCH. SEE 7 / S302.

5 SKYLIGHT FRAMING - PART PLAN
S302 N.T.S.

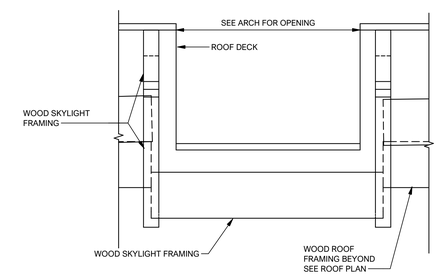

NOTE:
JOISTS SUPPORTING SKYLIGHT TO BE
ALIGNED WITH ROOF PITCH. SEE 7 / S302.

6 SKYLIGHT - SECTION 1
S302 N.T.S.

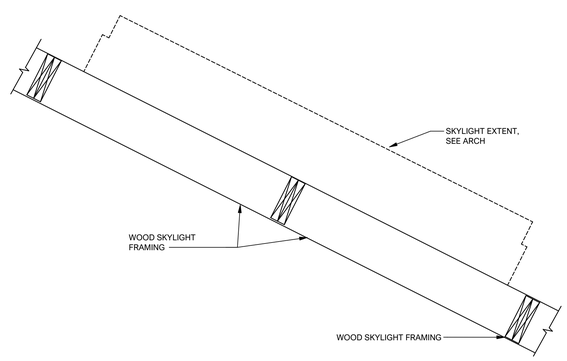

7 SKYLIGHT - SECTION 2
S302 N.T.S.

WOOD-FRAMED NAILING SCHEDULE (MINIMUM REQUIREMENTS)

COMPONENT		NAIL	TYPE	SIZE & QTY.	REMARKS
STUD	TO SILL PLATE	COMMON	DIRECT	(2) - 16d	
			TOE	(4) - 8d	
	TO TOP PLATE	COMMON	DIRECT	(2) - 16d	
			TOE	(2) - 16d	
	TO STUD (CORNER)	COMMON	DIRECT	16d @ 24" o/c	
	TO STUD (2-PLY)	COMMON	DIRECT	10d @ 24" o/c	DOUBLE STUD
SILL PLATE TO FLOOR FRAMING		COMMON	DIRECT	16d @ 16" o/c	
TOP PLATE	DOUBLE TOP PLATE	COMMON	DIRECT	10d @ 16" o/c	
	LAP	COMMON	DIRECT	(2) - 10d	
ROOF RAFTER	TO WALL PLATE	COMMON	TOE	(3) - 8d	
	TO RIDGE BEAM	COMMON	DIRECT	(2) - 16d	
			TOE	(2) - 16d	
JACK RAFTER TO HIP		COMMON	DIRECT	(2) - 16d	
			TOE	(3) - 10d	
FLOOR JOIST	TO PLATE	COMMON	TOE	(3) - 8d	
	TO GIRDER	COMMON	TOE	(3) - 8d	
	BRIDGING	COMMON	DIRECT	(2) - 8d	EACH END
LEDGER TO JOIST		COMMON	DIRECT	(3) - 16d	
CEILING JOIST	TO PLATE	COMMON	TOE	(3) - 16d	
	TO PARALLEL RAFTER	COMMON	DIRECT	(3) - 10d	
	LAPS AT PARTITION	COMMON	DIRECT	(3) - 18d	
COLLAR BEAM TO RAFTER		COMMON	DIRECT	(3) - 10d	
TAIL BEAM TO HEADER		COMMON	END	(1) - 20d PER SQ. FT.	OF TRIBUTARY FLOOR AREA
HEADER TO TRIMMER		COMMON	END	(1) - 20d PER SQ. FT.	OF TRIBUTARY FLOOR AREA
WALL SHEATHING	EDGE NAILING	COMMON	DIRECT	8d @ 6" o/c	
	INTERMEDIATE NAILING	COMMON	DIRECT	8d @ 6" o/c	
ROOF SHEATHING	EDGE NAILING	COMMON	DIRECT	8d @ 6" o/c	
	INTERMEDIATE NAILING	COMMON	DIRECT	8d @ 6" o/c	

8 WOOD NAILING SCHEDULE
S302 N.T.S.

TABLE 1
WOOD BEAM CONNECTION TO STEEL MEMBER

BEAM SIZE	MIN. SHEAR CAPACITY (ASD)
(2) & (3) 2x12, 4x8 LVL	5 k
4x16 LVL	10 k

TABLE 2
WOOD BEAM CONNECTION TO WOOD MEMBER

BEAM SIZE	MIN. SHEAR CAPACITY (ASD)
2x8, 2x12, (2) & (3) 2x12, 4x8 LVL	5 k

9 WOOD CONNECTION LOAD TABLES
S302 N.T.S.

TABLE 1
CONNECTION TO COLUMN

BEAM SIZE	MIN. SHEAR CAPACITY (ASD)
HSS6x6, HSS8x8, HSS12x6	5 k
HSS14x10	35 k

TABLE 2
CONNECTION TO BEAM

BEAM SIZE	MIN. SHEAR CAPACITY (ASD)
HSS3x3,HSS6x6, HSS8x8, HSS12x6	5 k
HSS14x10	35 k

10 STEEL CONNECTION LOAD TABLES
S302 N.T.S.

Key Plan

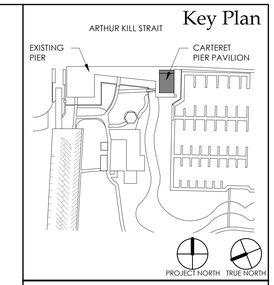

PROJECT
CARTERET PAVILION
CARTERET, NJ

GEOTECHNICAL & STRUCTURAL ENGINEER
McLaren ENGINEERING GROUP
McLaren Technical Services, Inc.
530 Chestnut Ridge Road
Woodcliff Lake, New Jersey 07677
201.775.6000 | www.mgmclaren.com

MEP ENGINEER
KeRi ENGINEERING PC
911 SPRINGFIELD ROAD, SUITE 2
UNION, NEW JERSEY 07083
973.866.5374
INFO@KERIENGINEERING.COM

CIVIL ENGINEER
CME ASSOCIATES Consulting & Municipal ENGINEERS
1460 RT. 9 SOUTH
HOWELL, NEW JERSEY 07731
732.462.7400
INFO@CMEUSA1.COM

FOOD SERVICE DESIGN CONSULTANT
RAYMOND/RAYMOND ASSOCIATES
FOOD SERVICE CONSULTANTS SINCE 1936
44 ST. JOHN STREET
GOSHEN, NEW YORK
845.360.5112
INFO@RRADESIGNS.COM

DMR
ARCHITECTURE
PLANNING
ENGINEERING
INTERIORS
CONSULTING
www.dmrarchitects.com

MEMBERS OF THE AMERICAN INSTITUTE OF ARCHITECTS

LLOYD A. ROSENBERG	NJ - AI 05526
KURT A. VIERHEILIG	NJ - AI 17809
PRADEEP KAPOOR	NY - 042197
FERNANDO ROBLEDO	NY - 033804
JANET PINI	NJ - AI 02102900

RELEASED FOR BID
06.26.2023

NOT VALID FOR BIDDING UNLESS SIGNED AND SEALED BY ARCHITECT

777 Terrace Avenue, 6th Floor
Hasbrouck Heights, New Jersey 07604
Tel 201 - 288 - 2600 || Fax 201 - 288 - 2662

NCARB NATIONAL COUNCIL OF ARCHITECTURAL REGISTRATION BOARDS
CO - 306 184 CT - 05438 NJ - AI 05526
NJ-BOARD OF PROFESSIONAL PLANNERS) - LI 01584
NY - 013025-1 PA - RA - 13437-B

DWG
TYPICAL DETAILS

SCALE As indicated

DATE	DESCRIPTION	DRN	CHK
06.26.2023	RELEASED FOR BID		

REV.	DATE	DESCRIPTION		

PROJECT NO. 220485
SHEET NO. S302

Copyright © 2022 by DMR PLOT DATE: 6/27/2023 9:19:53 PM

C:\Users\ychang\OneDrive - mgmclaren.com\Documents\220485 - Carteret Pavilion\ychang37NSU - R20_01.rvt
6/27/2023 9:19:53 PM

ABBREVIATIONS LIST

ABD	AUTOMATIC BALL DRIP
AFF	ABOVE FINISHED FLOOR
BFP	BACKFLOW PREVENTER
℄	CENTER LINE
CLG.	CEILING
DCDV	DOUBLE CHECK DETECTOR VALVE
DN	DOWN
DR	DRAIN
DWG	DRAWING
EL	ELEVATION
FCVA	FLOOR CONTROL VALVE ASSEMBLY
FD	FLOOR DRAIN
FHV	FIRE HOSE VALVE
FP	FIRE PUMP
FSP	FIRE STANDPIPE
FVC	FIRE VALVE CABINET
FS	FLOW SWITCH
FT	FOOT, FEET
INV	INVERT
JP	JOCKEY PUMP
LH	LIGHT HAZARD
NTS	NOT TO SCALE
OH	ORDINARY HAZARD
PG	PRESSURE GAUGE
SBP	SPRINKLER BOOSTER PUMP
S.F.	SQUARE FOOT, FEET
SP	SPRINKLER PIPING
SPRK	SPRINKLER
SPEC	SPECIFICATIONS
STD	STANDARD
TS	TAMPER SWITCH
TYP	TYPICAL

SYMBOLS

—F—	FIRE STANDPIPE LINE
—SP—	SPRINKLER LINE
	NEW WORK
	EXISTING
	EXISTING UPRIGHT SPRINKLER HEAD
	CONCEALED PENDENT SPRINKLER HEAD
	RELOCATE SPRINKLER
	CONNECT TO EXISTING
	PIPE DROPPING DOWN
	PIPE CAP

DRAWING SYMBOLS

AC / X	EQUIPMENT TAG
	SECTION NUMBER & DRAWING NUMBER
X	DETAIL NUMBER
X	SHEET NOTE

NOTE:

ALL ABBREVIATIONS AND SYMBOLS MAY NOT APPEAR ON THE DRAWINGS FOR THIS PROJECT.

REFERENCE CODES:

1. INTERNATIONAL BUILDING CODE 2018, NJ EDITION
2. NFPA 13
3. INTERNATIONAL MECHANICAL CODE 2021
4. INTERNATIONAL FIRE CODE 2015, NJ EDITION

SPRINKLER GENERAL NOTES:

1. ALL SPRINKLER WORK SHALL BE INSTALLED IN STRICT CONFORMANCE WITH NFPA-13, THE BUILDING CODE, OWNERS INSURANCE CARRIER, LOCAL FIRE DEPARTMENT RULES AND REGULATIONS AND OTHER AUTHORITIES HAVING JURISDICTION. CONFIRM WITH OWNER ABOUT THE INSURANCE CARRIER FOR THE BUILDING AND ALSO THE INSURANCE CARRIER TO WHOM THE SIGNED AND SEALED OF REQUIRED SPRINKLER DRAWINGS SHALL BE SUBMITTED BY THE CONTRACTOR.
2. THE LOCATION OF SPRINKLER HEADS ARE APPROXIMATE AND SHOWN ONLY FOR THE CONVENIENCE OF THE CONTRACTOR, THEY ARE NOT INTENDED TO BE COMPLETE AND ACCURATE IN EVERY DETAIL. THE CONTRACTOR SHALL LOCATE SPRINKLER HEADS IN THE AREA OF WORK AND MAKE ALL ADJUSTMENTS NEEDED TO PROVIDE SPECIFIC DENSITY REQUIREMENTS FOR ADEQUATE COVERAGE. THE CONTRACTOR SHALL COORDINATE ALL WORK WITH OTHER TRADES BEFORE PROCEEDING WITH ANY WORK.
3. THE CONTRACTOR SHALL PERFORM HYDRAULIC CALCULATIONS AS REQUIRED BASED ON RECENT HYDRANT FLOW TEST RESULTS WHICH WERE RECORDED WITHIN A YEAR. THE CONTRACTOR SHALL PROVIDE DETAILED DRAWINGS AND HYDRAULIC CALCULATIONS OF THE NEW WORK IN ACCORDANCE WITH NFPA-13 REQUIREMENTS TO THE OWNERS INSURANCE RATING ORGANIZATION FOR APPROVAL. AFTER APPROVAL HAS BEEN OBTAINED SUBMIT DRAWINGS TO THE ENGINEER FOR CONCURRENCE AND ALSO TO THE AUTHORITIES HAVING JURISDICTION FOR APPROVAL. THE ENGINEER RESERVES THE RIGHT TO MAKE MINOR MODIFICATIONS TO THE LAYOUT. CONTRACTORS DRAWINGS SHALL BEAR A PROFESSIONAL ENGINEERS STAMP AND SIGNATURE IF SO REQUIRED.
4. REMOVE MATERIAL WHICH MAY INTERFERE WITH THE NEW INSTALLATION. REINSTALL AFTER NEW WORK IS DONE. VERIFY WITH OWNER AND COORDINATE WITH OTHER TRADES PRIOR TO CONSTRUCTION.
5. ALL PERMITS, FEES, INSPECTIONS AND WARRANTIES SHALL BE THE RESPONSIBILITY OF THE CONTRACTOR. COPIES OF ALL APPLICATIONS AND PERMITS SHALL BE PROVIDED TO OWNER.
6. THE CONTRACTOR SHALL COORDINATE WITH THE OWNER WHERE SHUTTING DOWN EXISTING SMOKE DETECTORS, ELECTRICAL PANELS, WATER RISER OR OTHER SYSTEMS. ADVANCE NOTICE OF A MINIMUM OF 48 HOURS IS REQUIRED.
7. THE CONTRACTOR SHALL TAKE ALL NECESSARY PRECAUTIONS TO ENSURE ALL BURNING/WELDING OPERATIONS AND SMOKE GENERATED FROM THESE OPERATIONS DO NOT INTERFERE WITH THE NORMAL OPERATION OF THE FACILITY. COORDINATE WITH OWNER AND OBTAIN APPROVAL. MINIMUM 48 HOURS ADVANCE NOTICE SHALL BE PROVIDED.
8. ALL WELDING/BURNING WORK SHALL BE PROPERLY VENTILATED AND PURGED. COORDINATE WITH OWNER AND OBTAIN APPROVAL. MINIMUM 48 HOURS ADVANCE NOTICE SHALL BE PROVIDED.
9. ALL CUTTING AND PATCHING RELATED TO FIRE PROTECTION WORK SHALL BE THE RESPONSIBILITY OF THE CONTRACTOR.
10. ALL AREAS ADJACENT TO WORK AREA SHALL BE PROTECTED FROM DAMAGE, DUST AND DIRT.
11. PROMPTLY REMOVE ALL DEBRIS FROM SITE AND CLEAN THE WORK AREA AT THE END OF EACH DAY.
12. ALL WORK SHALL BE PERFORMED IN ACCORDANCE WITH APPLICABLE CODE(S).
13. INFORMATION SHOWN ON DRAWINGS IS INTENDED FOR THE GUIDANCE OF THE CONTRACTOR. THE LOCATION AND SIZE OF EXISTING PIPING ARE APPROXIMATE. EXISTING CONDITIONS SHOWN ARE NOT INTENDED TO BE COMPLETE AND ACCURATE IN EVERY DETAIL AND MUST BE VERIFIED ON THE SITE. CONTRACTOR SHALL INCLUDE IN HIS BID COST FOR CONDUCTING SITE SURVEY TO VERIFY FIELD CONDITIONS AND FOR THE PREPARATION OF PIPING AND SPRINKLER LAYOUT DRAWINGS. CONTRACTOR SHALL MAKE ALL REQUIRED ADDITIONS AND/ OR MODIFICATIONS NECESSARY TO SUIT ACTUAL FIELD CONDITIONS.
14. CONTRACTOR SHALL HAVE ON SITE FOREMAN DURING ALL ASPECTS OF WORK.
15. CONTRACTOR SHALL VERIFY WITH OWNER EQUIPMENT TO SALVAGED PRIOR TO DEMOLITION. STORE AND/OR REINSTALL AS DIRECTED BY OWNER.
16. CONTRACTOR SHALL REMOVE EXISTING PIPING IN A NEAT AND ORDERLY FASHION. DO NOT DEMOLISH PIPING PERTAINING TO OTHER AREAS PASSING THROUGH THE AREA OF WORK. COORDINATE WITH OWNER.
17. ALL EXPOSED PIPING SHALL BE PAINTED WHITE UNLESS OTHERWISE NOTED AND LABELED 'SPRINKLER' PIPING.
18. FOR ALL NEW SPRINKLER HEADS INDICATED ON PLANS, CONTRACTOR SHALL PROVIDE NEW PIPING SIZED BASED ON HYDRAULIC CALCULATIONS TO NEAREST MAIN SPRINKLER PIPE. CONTRACTOR SHALL NOT ASSUME THAT EXISTING PIPE IS CAPABLE TO FEED NEW HEADS WITHOUT PERFORMING HYDRAULIC CALCULATIONS.

FIRE PROTECTION SPECIFICATIONS

1.0 SCOPE OF WORK

1. ALL WORK SHALL BE PERFORMED IN ACCORDANCE WITH APPLICABLE CODE.
2. ALL EQUIPMENT AND ASSOCIATED WORK SHALL BE INSTALLED PER MANUFACTURER'S INSTRUCTIONS.
3. CONTRACTOR SHALL PREPARE ALL PIPING AND EQUIPMENT LAYOUT DRAWINGS, HYDRAULIC CALCULATIONS AND SHALL SUBMIT AND OBTAIN APPROVAL FROM AUTHORITIES HAVING JURISDICTION.
4. CONTRACTOR SHALL BE RESPONSIBLE FOR ALL PERMITS, FEES, INSPECTIONS AND WARRANTIES.
5. ALL WORK FLOOR AREA SHALL BE PROTECTED FROM DAMAGE, DUST AND DIRT. PROVIDE SUFFICIENT FIREPROOF TARPAULINS AND PLYWOOD IN WORK AREA.
6. UPON COMPLETION OF INSTALLATION, CONDUCT PERFORMANCE TESTING AND INSPECTION OF ENTIRE INSTALLATION AND OBTAIN APPROVALS FROM AUTHORITIES HAVING JURISDICTION.
7. LABEL ALL EQUIPMENT, PIPING AND TAG ALL VALVES.
8. PROVIDE ESCUTCHEONS OF APPROVED SIZE AND MAKE ON ALL PIPES PASSING THROUGH WALLS FLOORS, CEILINGS OR PARTITIONS WHERE EXPOSED TO VIEW.
9. PROVIDE METAL CABINET WITH EXTRA SPRINKLER AND SPRINKLER HEAD WRENCH. THE NUMBER AND TYPES OF SPRINKLER HEADS SHALL BE AS SPECIFIED IN NFPA 13.
10. CONTRACTOR SHALL PROTECT ALL FLOORING FROM DUST, DIRT AND DAMAGE. DAMAGED FLOORING SHALL BE REPLACED WITH MATERIALS TO MATCH EXISTING AT NO COST TO OWNER. CONTRACTOR SHALL BE RESPONSIBLE FOR ALL CLEAN UP EVERYDAY.

1.1 INTENT OF THE DRAWINGS AND SPECIFICATIONS

A. IT IS THE INTENT OF THESE SPECIFICATIONS TO PROVIDE COMPLETE SYSTEMS IN GOOD WORKING ORDER, READY FOR OPERATION, INCLUDING ALL ACCESSORIES AND ITEMS REQUIRED FOR PROPER OPERATION.

1.2 SHOP DRAWINGS

A. SUBMIT SHOP AND ERECTION DRAWINGS AND OBTAIN WRITTEN APPROVAL OF SAME BEFORE ORDERING OR INSTALLING ANY OF THE EQUIPMENT OR MATERIAL. EQUIPMENT OR MATERIAL ORDERED OR INSTALLED WITHOUT WRITTEN APPROVAL WILL NOT BE ACCEPTED. SUBMIT SHOP DRAWINGS FOR THE FOLLOWING:
   1. PIPING MATERIAL, JOINTING METHODS, HEAD LAYOUT, SPRINKLER HEADS AND SUPPORTS.
   2. PIPING SYSTEMS LAYOUT.
   3. HYDRAULIC CALCULATIONS AND CURRENT WATER FLOW TEST REPORT IN COMPLIANCE WITH IBC 2018. CALCULATIONS SHALL BE BASED ON RECENT HYDRANT FLOW TEST RESULTS WHICH WERE RECORDED WITHIN A YEAR.

B. SHOP DRAWING PLANS SHALL BE SIGNED AND SEALED BY A REGISTERED PROFESSIONAL ENGINEER RETAINED BY CONTRACTOR FOR SUBMISSION TO THE LOCAL AUTHORITY AND THE ARCHITECT/ENGINEER OF RECORD.

1.3 TESTS

A. TEST ALL NEW SPRINKLER PIPING HYDRAULICALLY AT A PRESSURE OF 200 PSIG OR LISTED SYSTEM PRESSURE (WITH FIRE PUMP PRESSURE IF APPLICABLE) FOR ONE HOUR WITH NO LOSS IN PRESSURE PERMITTED, PRIOR TO TESTING, ALL PIPING SHALL BE FLUSHED OUT UNTIL CLEAN.

B. ALL PIPING AND ATTACHED APPURTENANCES SUBJECTED TO SYSTEM WORKING PRESSURE SHALL BE HYDROSTATICALLY TESTED AT 200 PSI AND SHALL MAINTAIN THAT PRESSURE WITHOUT LOSS FOR 2 HOURS.

C. PORTIONS OF SYSTEM NORMALLY SUBJECTED TO SYSTEM WORKING PRESSURES IN EXCESS OF 150 PSI SHALL BE TESTED AS DESCRIBED IN SECTION B AT A PRESSURE OF 50 PSI IN EXCESS OF SYSTEM WORKING PRESSURE.

D. MODIFICATIONS TO EXISTING PIPING SYSTEMS SHALL REQUIRE TESTING AT SYSTEM WORKING PRESSURE.

E. WHERE MODIFICATION IS MADE TO AN EXISTING SYSTEM AFFECTING MORE THAN 20 SPRINKLERS, THE NEW PORTION SHALL BE ISOLATED AND TESTED AT NOT LESS THAN 200 PSI FOR 2 HOURS.

F. MODIFICATIONS THAT CANNOT BE ISOLATED, SUCH AS RELOCATED DROPS, SHALL REQUIRE TESTING AT SYSTEM WORKING PRESSURE.

1.4 ARRANGE ALL PIPING SO THAT ANY PART OF THE WORK MAY BE COMPLETELY DRAINED. PITCH PIPING BACK TO MAIN DRAIN POINT.

1.5 CONTRACTOR GUARANTEES THAT ALL WORK INSTALLED BE FREE OF DEFECTS IN BOTH WORKMANSHIP AND MATERIALS FOR A PERIOD OF ONE YEAR FROM THE DATE OF ACCEPTANCE OF THE WORK.

1.6 SEQUENCE FOR DRAWING SUBMISSION

A. THE CONTRACTOR SHALL LAYOUT SPRINKLER HEADS AND PREPARE HYDRAULIC CALCULATIONS BASED ON THE HEAD LAYOUT. THESE DRAWINGS SHALL BE SUBMITTED BY THE CONTRACTOR FOR PERMIT PURPOSES ONLY.

B. THE CONTRACTOR SHALL PREPARE DRAWINGS AND HYDRAULIC CALCULATIONS BASED UPON CONTRACTOR'S SHOP DRAWINGS FOR SPRINKLER PIPING AND HEADS LAYOUT AND UTILIZING FLOW AND PRESSURE DATA. THE DRAWINGS PREPARED BY THE CONTRACTOR SHALL BE SUBMITTED TO OWNER'S INSURANCE COMPANY FOR APPROVAL.

C. THE CONTRACTOR SHALL TAKE THE APPROVED DRAWINGS FROM OWNER'S INSURANCE COMPANY TO THE LOCAL AUTHORITIES FOR APPROVAL.

FIRE PROTECTION SPECIFICATIONS (CONTINUED)

2.0 MATERIAL

A. ALL PIPING AND MATERIALS SHALL BE NEW. MANUFACTURERS MODEL NUMBERS ARE USED TO ESTABLISH A LEVEL OF QUALITY. SIMILAR EQUIPMENT MAY BE USED IF IT IS JUDGED EQUAL BY THE ENGINEER IN ALL RESPECTS TO THOSE SPECIFIED.

B. PIPE 2" AND SMALLER SHALL BE BLACK STEEL, SCHEDULE 40 ASTM A-53 GRADE B. PIPE 2-1/2" AND LARGER SHALL BE SCHEDULE 10 WITH ROLL GROOVES. VICTAULIC OR EQUAL. JOINTS SHALL BE SCREWED, FLANGED OR GROOVED MECHANICAL COUPLINGS AT CONTRACTORS OPTION.

C. SPRINKLER HEADS SHALL BE QUICK RESPONSE TYPE. UL AND FM APPROVED. REFER TO TABLE.

D. PROVIDE ESCUTCHEONS WHERE PIPE PASSES THROUGH FLOOR OR WALLS

3.0 PIPE INSTALLATION

A. USE APPROVED FITTINGS TO MAKE CHANGES IN DIRECTION, BRANCH TAKEOFFS FROM MAINS AND REDUCTIONS IN PIPE SIZES.

B. INSTALL UNIONS ADJACENT TO EACH VALVE IN PIPES NPS 2" AND SMALLER. UNIONS ARE NOT REQUIRED ON FLANGED DEVICES OR IN PIPING INTALLATIONS USING GROOVED JOINTS.

C. INSTALL FLANGES OR FLANGE ADAPTERS ON VALVES, APPRATUS, AND EQUIPMENT HAVING NPS 2½" AND LARGER CONNECTIONS.

D. INSTALL "INSPECTOR'S TEST CONNECTIONS" IN SPRINKLER PIPING. COMPLETE WITH SHUTOFF VALVE, SIZED AND LOCATED ACCORDING TO NFPA13.

E. INSTALL SPRINKLER PIPING WITH DRAINS FOR COMPLETE SYSTEM DRAINAGE.

F. INSTALL SPRINKLER ZONE CONTROL VALVES , TEST ASSEMBLIES AND DRAIN RISERS ADJACENT TO SPRINKLER RISERS WHEN SPRINKLER BRANCH PIPING IS CONNECTED TO SPRINKLER RISERS.

G. INSTALL ALARM DEVICES IN PIPING SYSTEMS.

H. HANGERS AND SUPPORTS: COMPLY WITH NFPA 13 FOR HANGERS MATERIALS AND INSTALLATION.

I. SEISMIC PROTECTION: INSTALL PIPING ACCORDING TO NFPA 13 TO PROTECT FROM EARTHQUAKE DAMAGE.

J. INSTALL PIPING WITH GROOVED JOINTS ACCORDING TO MANUFACTURER'S WRITTEN INSTRUCTIONS. CONSTRUCT RIGID PIPING JOINTS. UNLESS OTHERWISE INDICATED.

K. INSTALL PRESSURE GAGES ON RISER OR FEED MAIN AND AT EACH SPRINKLER TEST CONNECTION. INCLUDE PRESSURE GAGES WITH CONNECTION NOT LESS THAN NPS 1/4(DN8) AND WITH SOFT METAL SEATED GLOBE VALVE. ARRANGED FOR DRAINING PIPE BETWEEN GAGE AND VALVE. INSTALL GAGES TO PERMIT REMOVAL, AND INSTALL WHERE THEY WILL NOT BE SUBJECT TO FREEZING.

4.0 WARRANTY

A. ALL WORK FURNISHED AND INSTALLED UNDER THIS CONTRACT SHALL BE COVERED BY A FULL, ONE YEAR GUARANTEE. THE WARRANTY SHALL COMMENCE ON THE DATE OF ACCEPTANCE BY AUTHORITIES HAVING JURISDICTION.

5.0 AS BUILT DRAWINGS

A. SUBMIT THREE (3) COPIES OF "AS BUILT" DRAWINGS AND CAD FILES AFTER INSTALLATION IS TESTED AND APPROVED BY AUTHORITIES HAVING JURISDICTION.

6.0 OPERATION AND MAINTENANCE MANUAL

A. AFTER INSTALLATION IS COMPLETE, INSTRUCT THE OWNERS REPRESENTATIVE IN THE PROPER OPERATION AND MAINTENANCE OF ALL EQUIPMENT AND SYSTEMS. SUBMIT THREE (3) COPIES OF ALL OPERATION AND MAINTENANCE MANUALS TO OWNERS REPRESENTATIVE.

PERFORMANCE SPECIFICATION CRITERIA

SPRINKLER PLANS AS SHOWN ARE FOR BIDDING PURPOSES ONLY. SPRINKLER CONTRACTOR IS TO OBTAIN CURRENT HYDRANT TEST DATA AND PROVIDE HYDRAULIC CALCULATIONS FOR SYSTEM PIPE SIZING IN ACCORDANCE WITH NFPA 13. CONTRACTOR IS TO SUBMIT SHOP DRAWINGS INDICATING HYDRAULIC CALCULATIONS, PIPING LAYOUT AND SIZING. SHOP DRAWINGS ARE TO BE SIGNED & SEALED BY A PROFESSIONAL ENGINEER AND REVIEWED AND APPROVED BY THE AUTHORITY HAVING JURISDICTION. ALL WORK IS TO BE DONE IN ACCORDANCE WITH ALL STATE, LOCAL, GOVERNMENT AND APPLICABLE CODES.

FIRE PROTECTION DESIGN CRITERIA

SYSTEM TYPE	OCCUPANCY CLASSIFICATION	CODE REFERENCE	AREA OF OPERATION	PROTECTION AREA	MAXIMUM SPACING	SPRINKLER HEAD LOCATION / TYPE
WET/DRY	LIGHT HAZARD	NFPA 13	1500 FT.²	225 FT.²	15 FT.	HARD CEILING/CONCEALED PENDENT
WET/DRY	LIGHT HAZARD	NFPA 13	1500 FT.²	225 FT.²	15 FT.	OPEN CEILING/UPRIGHT

SCHEDULE OF SPRINKLER HEADS

SYMBOL	MFR.	MODEL	SIN	TYPE	LOCATION	FINISH & REMARKS	TEMP. RATING	'K' FACTOR	HEAD COVERAGE	MIN. FLOW	MIN. PRESS.	LISTINGS
	RELIABLE	G4	RA2115	CONCEALED QUICK RESPONSE PENDENT (15'x15' MAX. SPACING)	THROUGHOUT THE FACILITY IN AREAS WITH SUSPENDED CEILINGS UNLESS OTHERWISE NOTED	AS SELECTED BY ARCHITECT	165° F	5.6	-	-	7 PSI	UL FM
	RELIABLE	GFR	R3125	QUICK RESPONSE UPRIGHT	AREAS WITHOUT SUSPENDED CEILING OR OPEN CEILING UNLESS OTHERWISE NOTED	AS SELECTED BY ARCHITECT	165° F	5.6	-	-	7 PSI	

NOTES:

1. SPRINKLER HEADS SHALL BE INSTALLED AS PER MANUFACTURER'S RECOMMENDATIONS.
2. PROVIDE METAL WIRE GUARDS WHERE SPRINKLERS ARE SUBJECT TO DAMAGE, AND SPRINKLER HEADS LOCATED UNDER HVAC DUCTS IN MECHANICAL EQUIPMENT ROOMS WHEN LOCATED LOWER THAN 7'-0" A.F.F. ETC.
3. ALL SPRINKLER HEADS THROUGHOUT THE FACILITY SHALL BE OF THE ORDINARY TEMPERATURE RATING EXCEPT AS FOLLOWS:
   a. SPRINKLER HEADS IN KITCHEN AND SHOWERS SHALL BE OF INTERMEDIATE TEMPERATURE RATING (175° TO 225°).
   b. SPRINKLER HEADS LOCATED CLOSE TO HEATERS, STEAM PIPING OR LOW-PRESSURE BLOW-OFF VALVE SHALL BE OF THE TEMPERATURE RATING AS REQUIRED BY NFPA 13.
   c. ALL HEAT GENERATING EQUIPMENT WHICH CAN AFFECT THE TEMPERATURE RATING OF THE SPRINKLER HEADS SHALL BE CLEARLY IDENTIFIED ON THE SHOP DRAWINGS PRIOR TO SUBMISSION FOR APPROVAL.
4. SPRINKLER HEADS MINIMUM FLOW & MINIMUM PRESSURE REQUIREMENTS TO BE BASED ON HYDRAULIC CALCULATION DESIGN DENSITIES.
5. ALL SPRINKLER HEAD FINISHES TO BE APPROVED BY ARCHITECT.

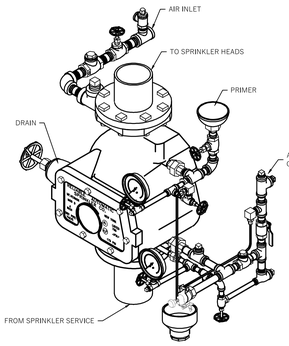

1 DRY PIPE VALVE DETAIL
SCALE: N.T.S.

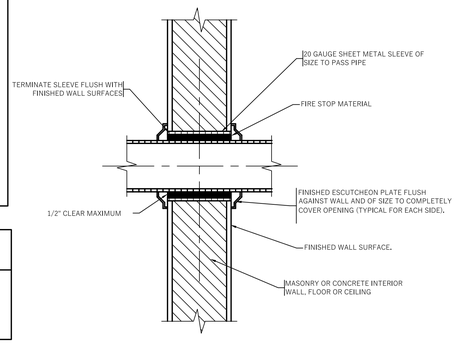

2 PIPE PENETRATING THROUGH INTERIOR WALL, FL. OR CEILING
SCALE: N.T.S.

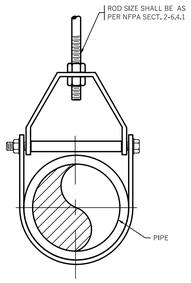

NOTES:

1. PIPE SUPPORT SHALL BE UL LISTED AND FM APPROVED.
2. PIPE SUPPORT SHALL COMPLY WITH FEDERAL SPECIFICATION WWH-171 (TYPE 10).

3 TYPICAL SPRINKLER PIPE SUPPORT
SCALE: N.T.S.

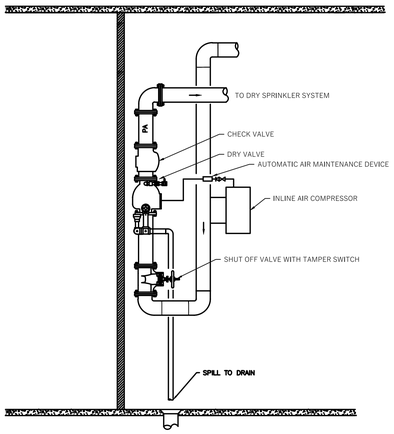

7 TYPICAL DRY VALVE SCHEMATIC
SCALE: N.T.S.

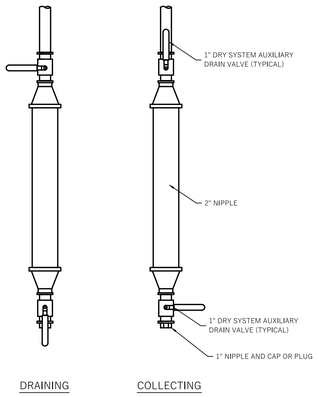

DRUM DRIP ASSEMBLY TO COMPLY WITH NFPA 13 AND NFPA 25

6 TYPICAL DRUM DRIP DRAIN DETAIL
SCALE: N.T.S.

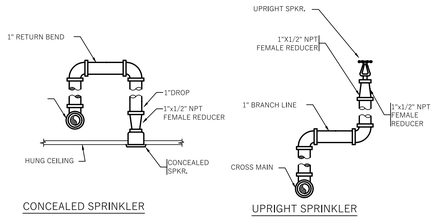

5 SPRINKLER INSTALLATION DETAILS
SCALE: N.T.S.

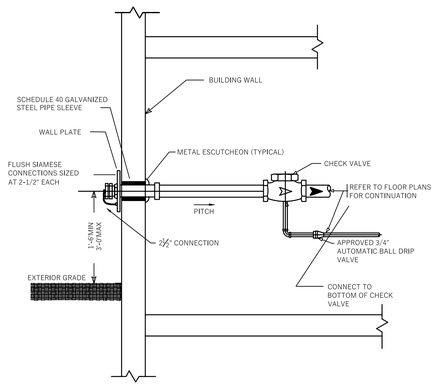

4 FIRE DEPARTMENT CONNECTION DETAIL
SCALE: N.T.S

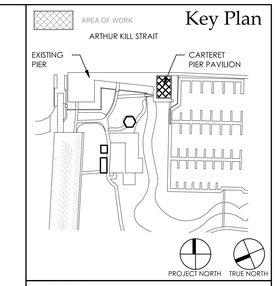

Key Plan

PROJECT

CARTERET PIER PAVILION

WATERFRONT PARK
200 MIDDLESEX AVENUE BLOCK 201 LOT 4
CARTERET, NEW JERSEY 07008

GEOTECHNICAL & STRUCTURAL ENGINEER

McLaren Technical Services, Inc.
Woodcliff Lake, New Jersey 07677
201.775.6000 | www.mgmclaren.com

MEP ENGINEER

KeRi ENGINEERING PC
911 Springfield Rd, Suite 2
Union, NJ 07083
T : 973.866.KeRi (5374)
F : 973.866.5370
W : keriengineering.com

CIVIL ENGINEER

1460 RT. 9 SOUTH
HOWELL, NEW JERSEY 07731
INFO@CMEUSA1.COM
732.462.7400

KITCHEN DESIGN CONSULTANT

44 ST. JOHN STREET
GOSHEN, NEW YORK
845.360.5112
INFO@RRADESIGNS.COM

DMR
ARCHITECTURE
PLANNING
ENGINEERING
INTERIORS
CONSULTING
www.dmrarchitects.com

MEMBERS OF THE AMERICAN INSTITUTE OF ARCHITECTS

LLOYD A. ROSENBERG	NJ - AI 05526
KURT A. VIERHEILIG	NJ - AI 17809
PRADEEP KAPOOR	NY - 042197
FERNANDO ROBLEDO	NY - 033804
JANET PINI	NJ - AI 02102900

NOT VALID FOR BIDDING UNLESS SIGNED AND SEALED BY ARCHITECT

777 Terrace Avenue, 6th Floor
Hasbrouck Heights, New Jersey 07604
Tel 201 - 288 - 2600 || Fax 201 - 288 - 2662

NCARB NATIONAL COUNCIL OF ARCHITECTURAL REGISTRATION BOARDS

CO - 306 184 CT - 05438 NJ - AI 05526
NJ BOARD OF PROFESSIONAL PLANNERS) - LI 01584
NY - 013025-1 PA - RA - 13437-8

DWG TITLE :

ABBREVIATIONS SYMBOLS & NOTES

SCALE: As indicated

DATE	DESCRIPTION	DRN	CHK
06/28/2023	RELEASED FOR BID	DD	MP

REV.	DATE	DESCRIPTION

PROJECT NO. 5146

SHEET NO. FP-001

Copyright © 2022 by DMR

PLOT DATE: 11/4/2022 3:33:09 PM

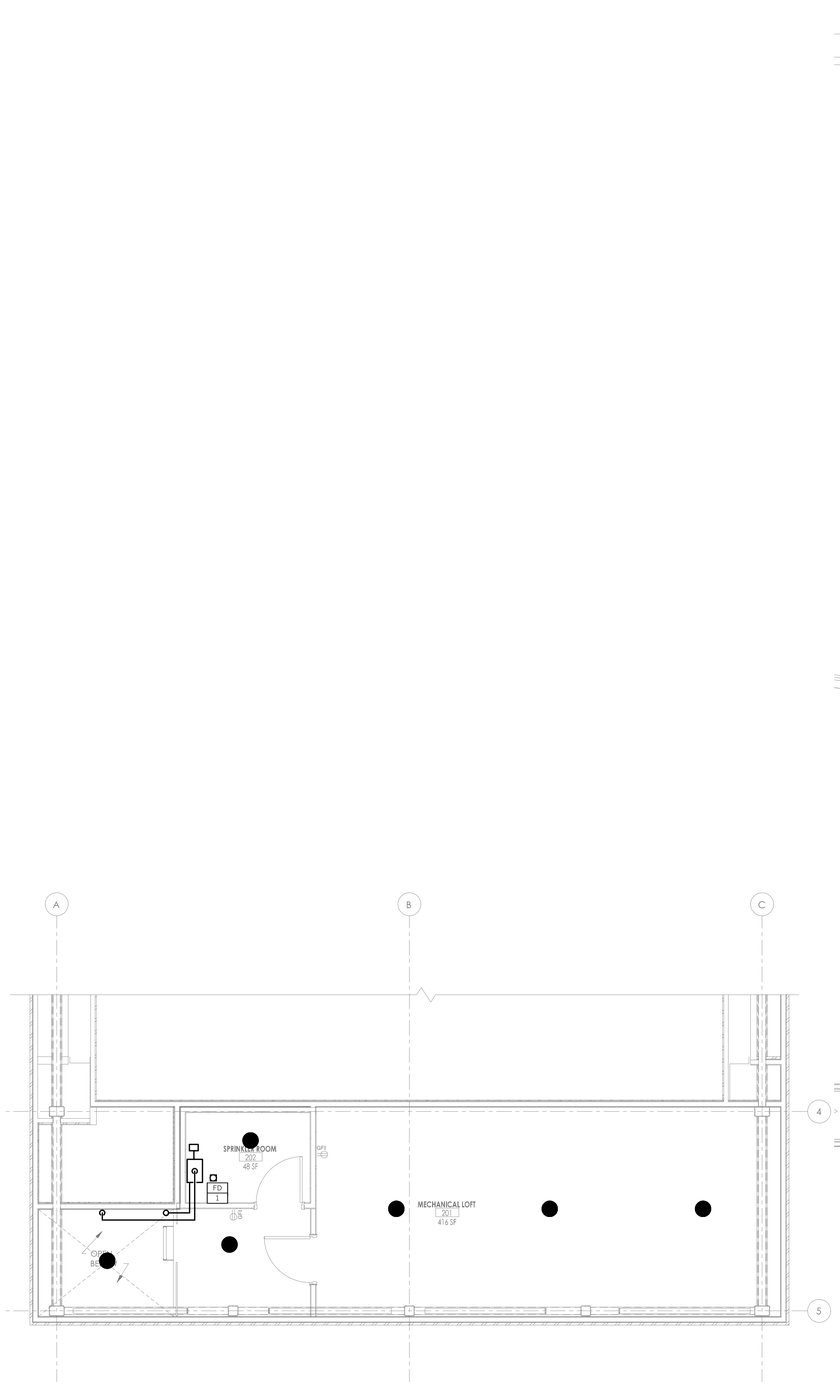

2 FIRE PROTECTION GROUND FLOOR PLAN - NEW WORK
SCALE: 1/4" = 1'-0"

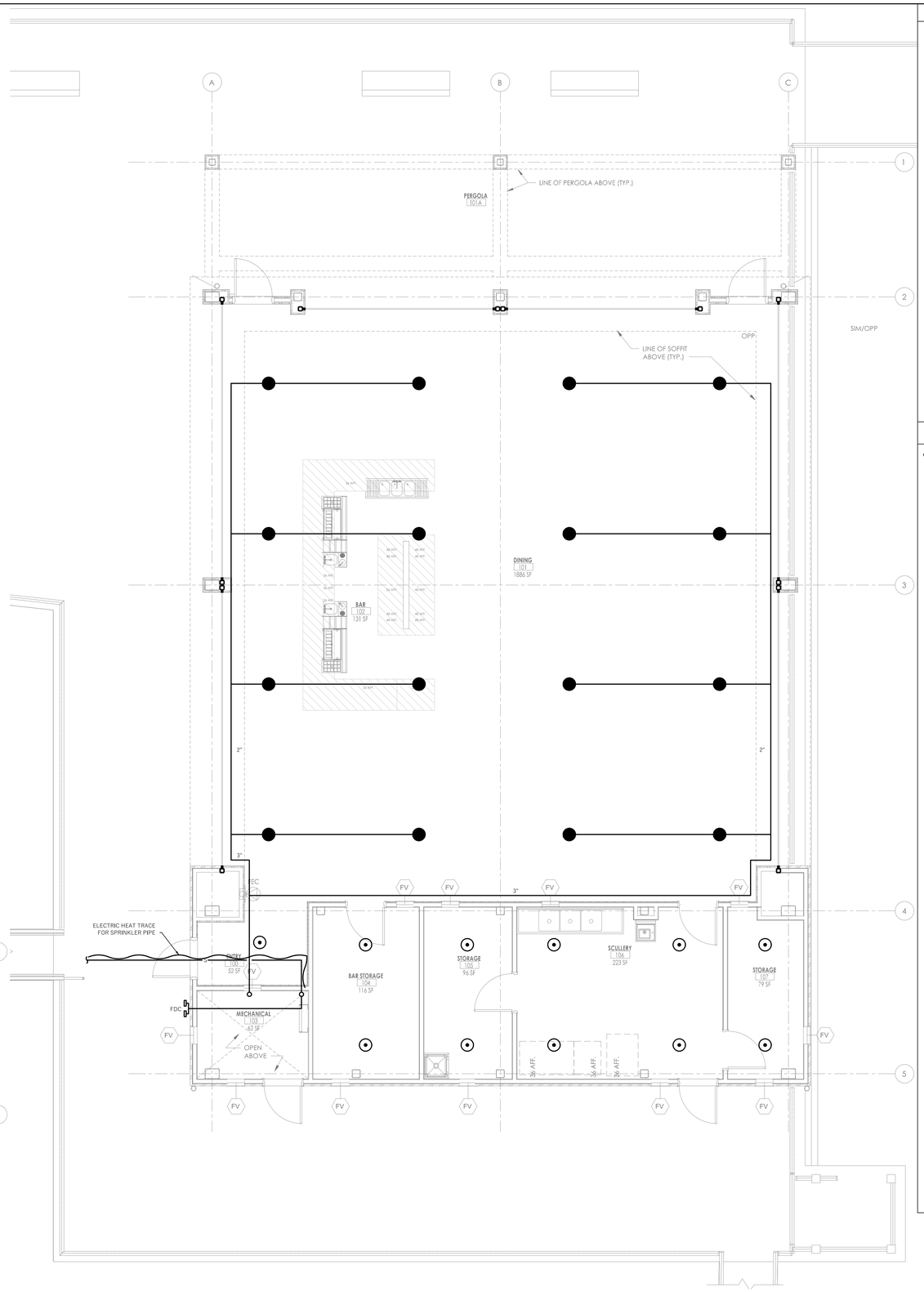

2 FIRE PROTECTION GROUND FLOOR PLAN - NEW WORK
SCALE: 1/4" = 1'-0"

GENERAL NOTES:

1. CONTRACTOR SHALL BE RESPONSIBLE TO PROTECT THE AREA OF WORK FROM ANY DAMAGE, DUST AND DEBRIS.
2. CONTRACTOR SHALL FIELD VERIFY EXISTING CONDITIONS BEFORE PROCEEDING WITH ANY WORK.
3. CONTRACTOR SHALL COORDINATE WORK WITH OTHER TRADES BEFORE PROCEEDING WITH ANY WORK.
4. CONTRACTOR SHALL COORDINATE FINAL LAB EQUIPMENT DIMENSIONS AND LOCATIONS WITH END USER BEFORE TERMINATING UTILITY CONNECTIONS.
5. CONTRACTOR SHALL PROVIDE ALL REQUIRED VALVING AND ACCESSORIES FOR A COMPLETE OPERATING SYSTEM.
6. CONTRACTOR SHALL COORDINATE ALL DISRUPTIVE WORK INCLUDING BUT NOT LIMITED TO DEMOLITION, WALL/CEILING OPENINGS, ETC, WITH THE UNIVERSITY'S COLLEGE OF SCIENCE AND MATHEMATICS (CSAM) OPERATIONS DEPARTMENT BEFORE PROCEEDING WITH ANY WORK.
7. CONTRACTOR SHALL SCHEDULE ALL WORK IN ADJACENT SPACES IN ADVANCE WITH UNIVERSITY. THE ADJACENT SPACES ARE IN USE AND WORK SHALL BE DONE ON OVERTIME
8. CONTRACTOR SHALL LABEL ALL PIPE INCLUDING LAB GASSES ACCORDING TO THE PIPE MEDIA AND FLOW ARROWS.
9. ALL GAS PIPING SHALL BE 316 SS.

SHEET NOTES:

1

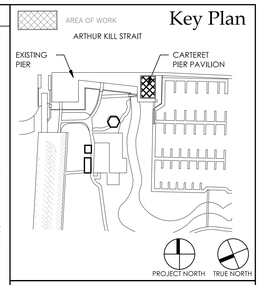

PROJECT
CARTERET PIER PAVILION

WATERFRONT PARK
200 MIDDLESEX AVENUE BLOCK 201 LOT 4
CARTERET, NEW JERSEY 07008

GEOTECHNICAL & STRUCTURAL ENGINEER

McLaren Technical Services, Inc.
Woodcliff Lake, New Jersey 07677
201.775.6000 | www.mgmclaren.com

MEP ENGINEER

KeRi ENGINEERING PC
911 Springfield Rd, Suite 2
Union, NJ 07083
T : 973.866.KeRi (5374)
F : 973.866.5370
W : keriengineering.com

CIVIL ENGINEER

1460 RT. 9 SOUTH
HOWELL, NEW JERSEY 07731
INFO@CMEUSA1.COM
732.462.7400

KITCHEN DESIGN CONSULTANT

44 ST. JOHN STREET
GOSHEN, NEW YORK
845.360.3112
INFO@RRADESIGNS.COM

DMR
ARCHITECTURE
PLANNING
ENGINEERING
INTERIORS
CONSULTING
www.dmrarchitects.com

MEMBERS OF THE AMERICAN INSTITUTE OF ARCHITECTS

LLOYD A. ROSENBERG	NJ - AI 05526
KURT A. VIERHBLIG	NJ - AI 17809
PRADEEP KAPOOR	NY - 042197
FERNANDO ROBLEDO	NY - 033804
JANET PINI	NJ - AI 02102900

NOT VALID FOR BIDDING UNLESS SIGNED AND SEALED BY ARCHITECT

777 Terrace Avenue, 6th Floor
Hasbrouck Heights, New Jersey 07604
Tel 201 - 288 - 2600 || Fax 201 - 288 - 2662

NCARB NATIONAL COUNCIL OF ARCHITECTURAL REGISTRATION BOARDS

CO - 306 184 CT - 05438 NJ - AI 05526
NJ BOARD OF PROFESSIONAL PLANNERS | - LI 01584
NY - 013025-1 PA - RA - 13437-8

DWG TITLE :

GROUND FLOOR - NEW WORK

SCALE As indicated

DATE	DESCRIPTION	DRN	CHK
06/26/2023	RELEASED FOR BID	DD	MP

REV.	DATE	DESCRIPTION

PROJECT NO. 5146

SHEET NO. FP-101

Copyright © 2022 by DMR

PLOT DATE: 11/4/2022 3:33:09 PM

FIRE PROTECTION SPECIFICATIONS

1. GENERAL:

1.1. ALL PROVISIONS IN THE GENERAL SPECIFICATIONS ABOVE APPLY TO THE FIRE PROTECTION SPECIFICATIONS.

1.2. THE FIRE PROTECTION SYSTEM SHALL BE INSTALLED IN ACCORDANCE WITH THE BUILDING CODE AND NFPA INSTALLATION OF SPRINKLER SYSTEMS. THE ENGINEERING PLANS PROVIDED ARE PRELIMINARY PLANS AS DEFINED IN NFPA PROVIDED FOR SCOPE AND REVIEW BY THE AUTHORITY HAVING JURISDICTION. WORKING PLANS AND HYDRAULIC CALCULATIONS IN ACCORDANCE WITH NFPA SHALL BE SUBMITTED AND APPROVED BY THE ENGINEER AND THE AHJ PRIOR TO THE INSTALLATION OF SYSTEM EQUIPMENT.

1.3. THE FIRE PROTECTION DRAWINGS ARE DIAGRAMMATIC, AND THEREFORE DO NOT RELIEVE THIS CONTRACTOR FROM PROVIDING ALL WORK AND EQUIPMENT NECESSARY TO COMPLETE THE INSTALLATION ACCORDING TO THEIR REQUIREMENTS. THE NUMBER AND SPACING OF SPRINKLER HEADS, SPACING AND SIZE OF A PIPE LOCATION AND NUMBER OF VALVES, METHOD OF DRAWING LINES, ALARM VALVES, AND ALL OTHER WORK AND DETAILS SHALL BE AS REQUIRED BY THE OWNER'S UNDERWRITES, NFPA, AND ALL OTHER AUTHORITIES HAVING JURISDICTION.

1.4. THE SPRINKLER HEADS IN ALL AREAS ARE TO BE INSTALLED ON A TRUE AXIS LINE IN BOTH DIRECTIONS WITH A MAXIMUM DEVIATION FROM AXIS LINE OF 1/2 IN. PLUS OR MINUS. IN ADDITION, ALL SPRINKLERS SHALL BE LOCATED IN CENTER OF TILES, GIRDS AND/OR ALIGNED WITH LIGHTS, DIFFUSERS, ETC., AS INDICATED ON ARCHITECTURAL REFLECTED CEILING PLANS AND DETAILS, AT THE COMPLETION OF THE INSTALLATION, IF ANY HEADS ARE FOUND TO EXCEED THE ABOVE-MENTIONED TOLERANCE, SAME SHALL BE REMOVED AND REINSTALLED BY THIS CONTRACTOR.

1.5. THE ARRANGEMENT, POSITIONS AND CONNECTIONS OF PIPE, DRAINS, VALVES, ETC., SHOWN ON THE DRAWINGS SHALL BE TAKEN AS A CLOSE APPROXIMATION AND WHILE THEY SHALL BE FOLLOWED AS CLOSELY AS POSSIBLE, THE RIGHT IS RESERVED BY THE OWNER TO CHANGE LOCATIONS, TO ACCOMMODATE ANY CONDITIONS WHICH MAY ARISE DURING THE PROGRESS OF THE WORK, WITHOUT ADDITIONAL COMPENSATION TO THIS CONTRACTOR FOR SUCH CHANGES, PROVIDED THAT THE CHANGES ARE REQUESTED PRIOR TO THE INSTALLATION OF THIS CONTRACTOR'S WORK, THE RESPONSIBILITY FOR ACCURATELY LAYING OUT THE WORK RESTS WITH THIS CONTRACTOR, SHOULD IT BE FOUND THAT ANY OF HIS WORK IS SO LAID OUT THAT INTERFERENCE WILL OCCUR, HE SHALL SO REPORT THAT TO THE OWNER.

1.6. PROVIDE ALL SPRINKLER HEADS IN STRICT ACCORDANCE WITH APPROVED SHOP DRAWINGS, THE ARCHITECT AND OWNER RESERVE THE RIGHT TO REJECT ANY AND ALL WORK NOT IN ACCORDANCE WITH THE APPROVED SHOP DRAWINGS.

1.7. ALL PIPING AND EQUIPMENT SHALL BE SUBSTANTIALLY SUPPORTED FROM THE BUILDING STRUCTURE. HANGERS AND SUPPORTS SHALL BE SPECIFICALLY APPROVED FOR USE IN EACH APPLICATION, WHERE OVERHEAD CONDITIONS DOES NOT PERMIT THE FASTENING OF HANGER RODS IN REQUIRED LOCATIONS, PROVIDE ADDITIONAL STEEL FRAMING AS REQUIRED AND APPROVED, DO NOT USE EXPANSION SHIELDS.

1.8. NO FIRE PROTECTION WORK SHALL BE HUNG FROM DUCTWORK OR THE HANGERS OF OTHER TRADES.

1.9. BECOME THOROUGHLY FAMILIAR WITH ACTUAL BUILDING SYSTEMS, WHICH ARE TO BE CHANGED, ALTERED, OR TO WHICH NEW CONNECTIONS ARE TO BE MADE. VERIFY ALL EXISTING CONDITIONS INCLUDING PIPE SIZE, LOCATION, AND ELEVATION.

1.10. THE INTENT OF THE WORK IS INDICATED ON THE DRAWINGS AND DESCRIBED HEREINAFTER, NO CONSIDERATION WILL BE GRANTED FOR REASON OF LACK OF FAMILIARITY ON THE PART OF THE CONTRACTOR REGARDING ACTUAL PHYSICAL CONDITIONS AT THE SITE.

1.11. COORDINATE WORK WITH ALL TRADES AND EXISTING CONDITIONS OF THE JOB SITE AND MAINTAIN REQUIRED CEILING HEIGHTS AND SPACE CONDITIONS.

1.12. ALL EQUIPMENT SHALL BE ASBESTOS FREE AND INDICATED AS SUCH.

1.13. DUE TO THE NATURE OF ALTERATION WORK WHICH REQUIRES THE BUILDING OR FACILITY TO BE KEPT OPERABLE AT ALL TIMES, IT SHALL BE THE RESPONSIBILITY OF THIS CONTRACTOR TO COORDINATE ALL ACTIVITIES, CONNECTIONS, SHUT DOWNS AND THE LIKE WITH THE GENERAL CONTRACTOR, TENANT, AND BUILDING OWNER, ANY INTERRUPTIONS OF BUILDING SERVICES INCLUDING PHYSICAL ACCESS TO ADJACENT SPACES MUST BE COORDINATED WITH THE BUILDING OWNER, ALL TEMPORARY CONNECTIONS OR AFTER-HOURS WORK SHALL BE SO ARRANGED WITH ALL PARTIES INVOLVED.

1.14. THIS TRADE MUST PERFORM WORK IN OCCUPIED AREAS, IT SHALL MAKE ARRANGEMENTS WITH THE GENERAL CONTRACTOR AND THE OWNER AS TO THE TIME AND METHOD IN WHICH THIS WORK SHALL BE PERFORMED, ARRANGE FOR ALL ADJACENT AREAS TO BE PROPERLY PROTECTED AGAINST DAMAGE, DEBRIS, DIRT AND DUST.

1.15. PROVIDE AS PART OF NEW WORK:

1.15.1. HANGERS AND SUPPORTS FOR PIPING

1.15.2. SCAFFOLDING, RIGGING, AND HOISTING

1.15.3. RUBBISH REMOVAL AND CLEANING

1.15.4. CUTTING AND PATCHING

1.15.5. SLEEVES, OPENINGS AND THE CORE DRILLING OF EXISTING SLABS

1.15.6. CAULKING, FIREPROOFING, AND THE PACKING AND FILLING OF SLEEVES AND OPENINGS

1.15.7. SHOP DRAWINGS AND "AS BUILT" DRAWINGS

1.15.8. OPERATING AND MAINTENANCE INSTRUCTIONS

1.15.9. OBTAINING ALL REQUIRED PERMITS, APPROVALS, ACCEPTANCE, FILING AND INSPECTION CERTIFICATES

1.15.10. GUARANTEE ALL WORK, LABOR AND MATERIALS FOR ONE YEAR FOLLOWING DATE OF ACCEPTANCE

1.15.11. VERIFYING EXISTING CONDITIONS AT THE PROJECT SITE

1.15.12. SPARE PARTS AND TOOLS

1.15.13. TESTS: OPERATION, PERFORMANCE AND CODE-REQUIRED TESTS

1.15.14. PROTECTION OF WORK AND ADJACENT SPACES DURING CONSTRUCTION

1.15.15. COORDINATION WITH OTHER TRADES

1.15.16. IDENTIFICATION: VALVE TAGS, VALVE TAG SCHEDULES, AND PIPING IDENTIFICATION

2. SCOPE OF WORK:

2.1 PROVIDE ALL MATERIALS, LABOR, EQUIPMENT, TOOLS, APPLIANCES, SERVICES, HOISTING, SCAFFOLDING, SUPPORT AND SUPERVISION FOR THE FURNISHING AND INSTALLING OF ALL THE FIRE PROTECTION WORK, AND ALL RELATED WORK, COMPLETE, IN ACCORDANCE WITH THE CONTRACT DOCUMENT, INCLUDING BUT NOT LIMITED TO THE FOLLOWING:

2.1.1. PROVIDE A COMPLETE AUTOMATIC SPRINKLER SYSTEM IN ACCORDANCE WITH THE OWNERS UNDERWRITER'S, NFPA, AND THE RULES OF ALL AUTHORITIES HAVING JURISDICTION.

2.1.2. SPRINKLER SYSTEMS SHALL INCLUDE CONNECTIONS TO THE SPRINKLER PIPING AND PROVISION OF A COMBINATION SHUTOFF VALVE AND PRESSURE REDUCING VALVE, FLOW SWITCH AND A DRAIN/TEST CONNECTION CONNECTED TO A VERTICAL DRAIN RISER SERVING THE FLOOR CONTROL VALVE.

2.1.3. THE SPRINKLER SYSTEMS SHALL BE HYDRAULICALLY CALCULATED TO THE FOLLOWING PARAMETERS:

2.1.3.1. OFFICE AREAS AND THE LIKE: LIGHT HAZARD, 0.10 GPM/SQ FT, OVER 1,500 SQ.FT.

2.1.3.2. STORAGE, SHOWROOM, MECHANICAL EQUIPMENT ROOMS: ORDINARY HAZARD, 0.15 GPM/SQ.F.T. OVER 1,500 SQ.FT.

2.1.4. INCLUDE ALL PIPE, FITTINGS, BRANCHES, VALVES, ALARM VALVES, LADDERS, SIGNS, PROTECTIVE PAINTING, ALARM SWITCHES, TEST CONNECTION, SPRINKLER HEADS, DRAINS, TESTS, ALARM PANELS, ETC., IN FULL ACCORDANCE WITH UNDERWRITERS' AND MUNICIPAL REQUIREMENTS.

2.1.5. DO ANY CUTTING REQUIRED FOR THE PASSAGE OR INSTALLATION OF PIPES, SUPPORTS, AND THE LIKE, IN GENERAL. DEMOLITION OF EXISTING WALLS AND CEILINGS WILL BE DONE BY OTHERS.

2.1.6. ALL PATCHING WILL BE DONE BY OTHERS. THE EXPENSE OF CUTTING AND RESTORING SURFACES TO THEIR ORIGINAL CONDITION WHEN CAUSED BY THIS TRADE'S FAILURE TO PERFORM ITS PRELIMINARY WORK, SHALL BE BORNED BY THIS TRADE.

3. DEMOLITION, CONNECTIONS TO EXISTING WORK, AND ALTERATION:

3.1. REFER TO THE CONTRACT DOCUMENTS FOR THE EXTENT OF SYSTEMS TO BE REMOVED. THE CONTRACTOR SHALL FIELD VERIFY AND INCLUDE IN THE BID ALL REMOVALS REQUIRED FOR THE COMPLETION OF WORK.

3.2. PLAN INSTALLATION OF NEW WORK AND CONNECTIONS TO EXISTING SYSTEMS TO INSURE MINIMUM INTERFERENCE WITH REGULAR OPERATION OF EXISTING FACILITIES. SUBMIT TO OWNER AND ARCHITECT FOR APPROVAL, DATE AND SCHEDULE OF ALL NECESSARY TEMPORARY SHUTDOWNS OF EXISTING SERVICES. ALL SHUTDOWNS SHALL BE MADE AT SUCH TIMES AS THEY WILL NOT INTERFERE WITH REGULAR OPERATION OF EXISTING FACILITIES AND ONLY AFTER WRITTEN APPROVAL OF THE SAME HAS BEEN OBTAINED FROM OWNER.

3.3. MAKE TEMPORARY CONNECTIONS AS REQUIRED BETWEEN NEW AND EXISTING WORK TO INSURE CONTINUOUS OPERATION OF THE FACILITY, ALL COSTS ASSOCIATED WITH AND RESULTING FROM TEMPORARY CONNECTIONS SHALL BE BORNE BY THIS CONTRACTOR.

3.4. CONNECT NEW WORK TO EXISTING WORK IN A NEAT AND APPROVED MANNER. RESTORE ANY DISTURBED EXISTING WORK TO ITS ORIGINAL CONDITION.

3.5. PROVIDE CAPS, PLUGS, AND OUTLETS AS REQUIRED ON EXISTING PIPING.

3.6. REMOVE AND / OR RELOCATE EXISTING AND OTHER WORK AS REQUIRED TO COMPLETE FINAL INSTALLATION.

3.7. ANY PIPING RENDERED DEFUNCT BY THIS ALTERATION WORK SHALL BE REMOVED. ALERT THE ARCHITECT AND GENERAL CONTRACTOR OF ANY "DISCOVERED" ABANDONED PIPING. IN GENERAL, ALL ABANDONED, INACTIVE, OR SUPERFLUOUS PIPING, INCLUDING HANGERS AND CLAMPS SHALL BE REMOVED.

3.8. ALL NEW AND EXISTING SYSTEMS SHALL BE LEFT IN PERFECT WORKING ORDER UPON COMPLETION OF ALL NEW WORK.

4. SLEEVES:

4.1. PROVIDE SLEEVES FOR ALL PIPES PASSING THROUGH FLOORS, WALLS AND CONCRETE, OR CONCRETE FIREPROOFED BEAMS, SLEEVES IN CONCRETE BEAMS, THROUGH CONCRETE WALLS, AND EXPOSED PIPES PENETRATING FLOORS: SCHEDULE 40 STEEL PIPE, SLEEVES WITHIN FURRED OUT ENCLOSURES IN FLOORS, THROUGH PARTITIONS, STEEL BEAMS AND WALLS: 18 GAUGE GALVANIZED SHEET METAL.

4.2. PROVIDE SLEEVES WITH AN I.D. AT LEAST 1/2 IN. GREATER THAN OUTSIDE OF PIPE SERVED, INCLUDING PIPE INSULATION WHICH MUST BE CONTINUOUS THROUGH SLEEVE. FINISH SLEEVES FLUSH WITH UNDERSIDE OF SLAB AND 1 IN. ABOVE FINISHED FLOOR.

4.3. WHERE PIPING PENETRATES WALLS (OTHER THAN FOUNDATION WALLS), PARTITIONS, FLOOR SLABS, ETC., SPACE BETWEEN PIPING AND SLEEVE SHALL BE PACKED WITH "3M" M.E.A. APPROVED FIRE-RATED MATERIAL. WHERE SLEEVES PASS THROUGH FIRE-RATED CONSTRUCTION, FIT ESCUTCHEON ON BOTH SIDES OF CONSTRUCTION.

4.4. PROVIDE WATERPROOF TYPE PIPE SLEEVES, ZURN Z-197 WITH GALVANIZED SCHEDULE 40 PIPE EXTENSIONS WHERE PENETRATING MEMBRANE WATERPROOFED FLOORS.

5. CODES, PERMITS, AND INSPECTIONS:

5.1. INSTALL ALL WORK IN FULL ACCORDANCE WITH THE REQUIREMENTS OF LOCAL AND GOVERNMENTAL DEPARTMENTS HAVING JURISDICTION OVER THESE MATTERS, AS WELL AS WITH ANY REQUIREMENTS OF NFPA, UL, FM, BSA, MEA, ETC, AND OTHER APPLICABLE CODES.

5.2. SECURE AND PAY FOR ALL NECESSARY APPROVALS, PERMITS, INSPECTIONS, CARTING, LEGAL DUMPING, ETC., AND DELIVER THE OFFICIAL RECORDS OF THE GRANTING OF PERMITS TO THE ARCHITECT AND OWNER WITHOUT ANY ADDITIONAL COST TO THE OWNER.

5.3. PAY ALL FILING FEES TO OBTAIN RELEASE OF APPROVED PLANS.

5.4. PAY ROYALTIES OR FEES REQUIRED IN CONNECTION WITH THE USE OF PATENTED DEVICES OR SYSTEMS, AND SAVE THE OWNER, THE ARCHITECT, THE CONSULTING ENGINEER, AND THE TENANT HARMLESS FROM ANY CLAIMS OR LAWSUITS ARISING FROM SUCH USE, AND INDEMNIFY EACH THEREOF AGAINST ATTORNEYS' FEES IN CONNECTION THEREWITH.

5.5. PROVIDE ALL SIGNS REQUIRED BY THE MUNICIPAL AUTHORITIES.

6. MATERIALS OF PIPING SYSTEMS:

6.1. WET SPRINKLER PIPING SHALL BE BLACK STEEL, SCHEDULE 40, SCHEDULE 10 WILL BE PERMITTED FOR SIZES 2 1/2" AND LARGER.

6.2. FITTINGS SHALL BE SCREWED, STANDARD WEIGHT, CAST IRON, UL AND FM APPROVED, FITTINGS, MECHANICAL GROOVE COUPLINGS, VICTAULIC STYLE 75, OR AS APPROVED, MAY BE USED WITH SCHEDULE 10 PIPE, COUPLINGS SHALL BE ROLLED GROOVE. WHEN USED WITH SCHEDULE 80 PIPE, COUPLINGS SHALL BE CUT GROOVE, EITHER ROLL OR CUT GROOVE MAY BE USED WITH SCHEDULE 40 PIPE. WELDED JOINTS AND FITTINGS MAY BE USED WHERE PERMITTED BY THE AUTHORITIES HAVING JURISDICTION PROVIDED SAFETY PROCEDURES DESCRIBED IN NFPA-13 AND 14 ARE FOLLOWED.

6.3. FOR PIPING 2 IN. AND LARGER, VICTAULIC STYLE 920 OR STYLE 921 MECHANICAL-T WITH LOCATING COLLAR ENGAGING INTO THE PIPE MAY BE USED FOR LESS THAN FULL SIZE BRANCH CONNECTIONS.

7. IDENTIFICATION OF SYSTEMS:

7.1. PROVIDE A TAG FOR EACH VALVE, THREE INCH DIAMETER BRASS OR ALUMINUM TAGS STAMPED WITH DESIGNATING NUMBERS TWO INCHES HIGH, PAINTED WITH WHITE ENAMEL; BACKGROUND PAINTED WITH RED ENAMEL, ATTACH TAG TO VALVE HANDLE OR SPINDLE WITH BRASS CHAIN.

8. HANGERS, INSERTS, AND PIPE SUPPORTS:

8.1. PROVIDE SUITABLE AND SUBSTANTIAL HANGERS AND SUPPORTS FOR ALL PIPING.

8.2. SPACE SUPPORTS SO THAT THERE IS AT LEAST ONE HANGER FOR EACH LENGTH OF PIPE, WITH ONE HANGER WITHIN 30 INCHES OF THE END SPRINKLER HEAD, WHERE THIS WOULD REQUIRE HANGERS CLOSER THAN 6 FEET 0 INCHES APART, HANGER SPACING MAY BE INCREASED TO 10 FEET 0 INCHES BETWEEN HANGERS FOR PIPES UP TO AND INCLUDING 2 INCH IPS AND 12 FEET 0 INCHES BETWEEN HANGERS FOR PIPES 2-1/2 INCH IPS AND LARGER. WHERE POSSIBLE, FASTEN HANGER RODS TO STRUCTURAL STEEL BEAMS.

8.3. SUPPORT HANGERS FROM APPROVED CONCRETE INSERTS WHERE CONCRETE SLABS EXIST. IF ANY PIPE HAS TO BE HUNG IN A SPACE WHERE NO INSERTS HAVE BEEN PROVIDE, DRILL A HOLE FROM BELOW THROUGH STONE CONCRETE SLABS, AND PROVIDE A ROD AND HANGER ATTACHED TO AN APPROVED FISHPLATE, OR FOR PIPES SMALLER THAN 3 INCH IPS, INSTALL A PHILLIPS RED HEAD STUD CONCRETE ANCHOR OR OTHER.

8.4. DO NOT HANG PIPING FROM DUCTWORK OR PIPING.

8.5. THIS CONTRACTOR MAY COORDINATE WITH THE OTHER CONTRACTORS TO USE COMMON MEANS OF SUPPORT. SUBMIT FOR APPROVAL ALL PERTINENT DESIGN DATA RELATING TO THE SUPPORT, AS WELL AS VERIFICATION OF THE RESPONSIBILITY FOR THE SUPPORT.

9. VALVES:

9.1 ALL WATER CONTROL VALVES WITHING THE BUILDING SHALL BE MILWAUKEE "GATE 2885-FP" OS&Y WEDGE GATE VALVES WITH PAINTED IRON WHEEL HANDLES, SHALL HAVE THE NAME OF THE MANUFACTURER AND WORKING PRESSURE CAST OR STAMPED THEREON.

9.2 VALVES CONTROLLING SPRINKLER BUTTERFLY, BALL OR OS&Y GATE VALVES.

9.2.1. BALL VALVES SHALL BE MILWAUKEE "BA-100" OR APPROVED ALL BRASS OR BRONZE CONSTRUCTION WITH REPLACEABLE TEFLON SEAT RING, TWO-PIECE UNION OR THREE-PIECE BOLTED CONSTRUCTION, WITH STUFFING BOX; WORKING PRESSURE SHALL NOT BE LESS THAN 175 PSI AT 175° F, AND SHALL CONFORM WITH ANSI STANDARDS. ALL VALVES SHALL BE STANDARD PORT UNLESS FULL-PORTED VALVES ARE INDICATED ON PLANS. THREADED VALVES USED IN BRAZED OR SOLDERED PIPING SYSTEMS SHALL BE FITTED WITH ADAPTERS. WHEN BRAZED OR SOLDERED END VALVES ARE USED, TEFLON SEATS MUST BE REMOVED PRIOR TO SOLDERING OR BRAZING.

9.2.2. BUTTERFLY VALVES SHALL BE MILWAUKEE BUTTERBALL "BB-SC" SERIES SLOW CLOSING INDICATING WAFER TYPE BUTTERFLY VALVE WITH OR WITHOUT SUPERVISORY TAMPER SWITCH ASSEMBLY (USE SCREWED LUG TYPE WHEN VALVE HAS TO PERFORM DEAD-END SERVICE): CAST IRON BODY TO 200 PSI WWP, DUCTILE IRON FOR HIGHER PRESSURES, INSTALLED BETWEEN FLANGES OF SIMILAR RATING, ACTUATORS SHALL BE MANUAL GEAR TYPE WITH HANDWHEEL; AND VALVE SHALL INCORPORATE A VISIBLE INDICATION OF OPEN OR CLOSED POSITION.

9.2.3. PRESSURE REGULATING VALVES (PRV) WHERE INSTALLED SHALL BE COMBINATION SHUTOFF AND PRESSURE REGULATING TYPE 400 PSI WWP BRONZE BODY WITH BALANCED PISTON. VALVE SHALL BE ZURN SERIES Z3004 "PRESSURE-TRU" OR POTTER ROEMER SERIES PRV-400-2.5 "REG-U-MATIC" OR AS APPROVED. PROVIDE PRESSURE GAUGE DOWNSTREAM OF PRV.

9.2.4. PROVIDE LADDERS TO ALL VALVES LOCATED MORE THAN 7 FEET 0 INCHES ABOVE FLOOR.

10. SPRINKLER HEADS:

10.1. PROVIDE AUTOMATIC SPRINKLER HEADS OF FINISH AS APPROVED BY THE OWNER, THE MUNICIPAL AUTHORITIES AND BY THE INSURING AGENCIES HAVING JURISDICTION. COVER PLATE FLUSH TYPE SPRINKLER HEADS SHALL BE RELIABLE MODEL "G4A" 5/16 INCH PLATE DIAMETER FINISH AS SELECTED BY OWNER; ALL OTHER SPRINKLER HEADS SHALL BE RELIABLE MODEL "Q" AUTOMATIC WATER SPRAY HEADS, OR AS APPROVED.

10.2. ALL HEADS SHALL BE "STANDARD" 1/2 INCH DIAMETER ORIFICE, UPRIGHT, PENDENT, FLUSH TYPE PENDENT, OR COVER PLATE FLUSH TYPE, TO FIT THE CONDITIONS IN WHICH THEY ARE INSTALLED.

10.3. ALL HEADS SHALL BE OF THE PROPER TEMPERATURE RATING FOR THE LOCATIONS IN WHICH THEY ARE INSTALLED. IN GENERAL, TEMPERATURE RATING SHALL BE 165° F., EXCEPT FOR MECHANICAL EQUIPMENT ROOMS, WHICH SHALL BE 286° F.

11. SPRINKLER SYSTEM APPURTENANCES:

11.1. PROVIDE THE SPRINKLER SYSTEM APPURTENANCES REQUIRED TO PROVIDE FIRE PROTECTION FOR THE RENOVATED AREA.

11.2. DETECTOR CHECK VALVE SHALL BE WATTS MODEL No. 709DCDA.

12. ALARM DEVICES:

12.1. ALL INTERCONNECTING ELECTRICAL WIRING WILL BE FURNISHED UNDER THE SPECIFICATIONS OF OTHER TRADES. PROVIDE ALL SWITCHES DIRECTLY CONNECTED TO EQUIPMENT PROVIDED BY THIS TRADE, REQUIRED FOR THE TRANSMISSION OF ALARM IMPULSES. SWITCHES SHALL BE OPEN OR CLOSED TYPE TO CONFORM WITH THE ALARM SYSTEM TO WHICH THEY ARE CONNECTED.

12.2. PROVIDE TAMPER SWITCHES FOR THE FOLLOWING VALVES:

12.2.1. ALL VALVES CONTROLLING THE FLOW OF WATER TO SPRINKLER HEADS, INCLUDING FLOOR CONTROL VALVES, AND METER VALVES, ETC.

12.2.2. SWITCHES SHALL GIVE AN ALARM IF THE VALVES SERVED ARE CLOSED, THE SWITCHES ARE REMOVED, OR IF THE COVER IS OPENED. VALVE STEMS SHALL BE NOTCHED TO TAKE THE SWITCHES. SWITCHES SHALL BE ACME FIRE ALARM CO, TYPE OSYS-U, OR AS APPROVED.

12.3. PROVIDE THE FOLLOWING FLOW ALARM DEVICES:

12.3.1. RETARD CHAMBER AND CLOSED CIRCUIT ELECTRIC SWITCH FOR EACH ALARM VALVE.

12.3.2. PADDLE TYPE WATER FLOW DETECTORS, CLOSED CIRCUIT TYPE WITH AN ADJUSTABLE RETARD OR TIME DELAY TO PREVENT FALSE ALARMS DUE TO WATER PRESSURE SURGES. SWITCHES SHALL BE ACME FIRE ALARM CO., TYPE WFD, OR AS APPROVED.

13. SPRINKLER DRAINS:

13.1. PROVIDE ALL NECESSARY DRAIN VALVES, CAPPED NIPPLES, AUXILIARY PIPING, ETC., AS REQUIRED TO DRAIN TRAPPED PORTIONS OF THE SYSTEM.

13.2. INSPECTORS TEST CONNECTIONS SHALL BE PROVIDED WITH A SIGHT CONNECTION AND PIPED TO WASTE.

13.3. MAIN DRAIN AND TEST CONNECTION SHALL BE PIPED TO WASTE.

13.4. PROVIDE ALL PIPING REQUIRED TO SPILL THE DRAINS AND TEST CONNECTIONS TO THE FLOOR, FUNNEL OR OTHER DRAINAGE CONNECTIONS PROVIDED UNDER THE PLUMBING CONTRACT, OR ARRANGE WITH THE PLUMBING CONTRACTOR TO PROVIDE ADDITIONAL DRAINAGE FACILITIES, IN WHICH CASE PAY ALL CHARGES RELATED TO THE ADDITIONAL PLUMBING WORK.

14. ACCESS DOORS FOR FINISHED CONSTRUCTION:

14.1. PROVIDE ACCESS DOORS AS REQUIRED FOR ALL CONCEALED VALVES, CLEANOUTS AND OTHER ELEMENTS REQUIRING ACCESS ABOVE CEILINGS OR BEHIND WALLS OR AS INDICATED ON THE DRAWINGS. THE INSTALLATION OF ALL DOORS WILL BE PERFORMED UNDER THE SPECIFICATIONS OF ANOTHER TRADE. COORDINATE THE WORK AND ASSUME RESPONSIBILITY FOR THE ACCESSIBILITY OF ALL VALVES.

14.2. USE THE FOLLOWING TYPE DOORS AS MANUFACTURED BY KARP ASSOCIATES, INC.

14.2.1. IN PLASTER CEILINGS, KARP DSC 210-PL.

14.2.2. IN 3 HOUR MASONRY ENCLOSURES (PIPE OR DUCT SHAFTS), KARP DSC-211-FRT WITH 1-1/2 INCH VERMICULITE PLASTER FILL. METAL LATH LINING FOR PLASTER SHALL BE SELF-FURRING TYPE, TACK WELDED TO PAN.

14.2.3. IN NON-RATED MASONRY, KARP DSC-211.

14.2.4. IN DRY WALL CONSTRUCTION, KARP DSC-214M.

14.3. SIZE ACCESS DOORS AS INDICATED ON THE DRAWINGS, OR AS SPECIFIED, BUT NOT SMALLER THAN 16 INCHES BY 16 INCHES. WHERE MORE THAN TWO VALVES ARE SERVED BY A DOOR AND THE BONNETS ARE WITHIN 12 INCHES OF THE FACE OF THE DOOR, THE SIZE OF THE DOOR SHALL BE INCREASED SO THAT ALL PORTIONS OF THE VALVES ARE WITHIN THE AREA DEFINED BY THE OPENING IN THE DOOR. WHERE THE BONNETS OF THE VALVES ARE MORE THAN 12 INCHES FROM THE FACE OF THE DOOR, THE DOORS SHALL HAVE A MINIMUM OF 20 INCH X 20 INCH CLEAR OPENING.

14.4. FURNISH BUTTONS OR TABS TO CEILING CONTRACTOR FOR SETTING, AS APPROVED BY ARCHITECT, TO INDICATE LOCATION OF VALVES. CLEANOUTS OR OTHER EQUIPMENT LOCATED ABOVE REMOVABLE TYPE CEILINGS WHERE ACCESS DOORS ARE NOT FURNISHED.

15. TESTS:

15.1. TEST THE SYSTEMS BEFORE ANY PAINT IS APPLIED.

15.2. TEST ALL SYSTEMS IN FULL ACCORDANCE WITH APPLICABLE UNDERWRITERS' AND MUNICIPAL REQUIREMENTS, BUT IN NO CASE SHALL THE SPRINKLER SYSTEM BE TESTED AT LESS THAN 200 LBS. HYDROSTATIC PRESSURE. APPLY THE TEST FOR A MINIMUM OF TWO (2) CONSECUTIVE HOURS WITH NO LOSS IN PRESSURE. PRIOR TO APPLYING THE HYDROSTATIC TEST ON A DRY PIPE SYSTEM, IT SHALL BE TESTED WITH 40 PSIG COMPRESSED AIR FOR A PERIOD OF 24 HOURS WITH A PRESSURE LOSS NOT TO EXCEED 1½" PSIG.

15.3. FURNISH AND PAY FOR ALL DEVICES, MATERIALS, SUPPLIES, LABOR AND POWER REQUIRED IN CONNECTION WITH TESTS. MAKE ALL TESTS IN THE PRESENCE AND TO THE SATISFACTION OF THE ENGINEER, INSURANCE UNDERWRITERS AND CITY INSPECTORS HAVING JURISDICTION.

15.4. REPAIR, OR IF REQUIRED BY THE ENGINEER REPLACE, DEFECTIVE WORK WITH NEW WORK WITHOUT EXTRA CHARGE TO THE OWNER. REPEAT TESTS AS DIRECTED, UNTIL ALL WORK IS PROVEN SATISFACTORY.

15.5. RESTORE TO ITS ORIGINAL CONDITION ANY WORK DAMAGED OR DISTURBED BY TESTS, ENGAGING THE ORIGINAL TRADES TO DO THE WORK OF RESTORATION.

15.6. NOTIFY THE ENGINEER AND INSPECTORS HAVING JURISDICTION AT LEAST 48 HOURS IN ADVANCE OF MAKING THE REQUIRED TESTS, SO THAT ARRANGEMENTS MAY BE MADE FOR THEIR PRESENCE TO WITNESS THE TESTS.

15.7. TEST EQUIPMENT IN SERVICE AND DEMONSTRATE THAT THE EQUIPMENT PERFORMS THE WORK INTENDED FOR IT AND THAT IT COMPLIES WITH THE REQUIREMENTS OF THESE SPECIFICATIONS FOR SUCH EQUIPMENT.

16. GUARANTEES AND CERTIFICATIONS:

16.1. ALL WORK SHALL BE GUARANTEED TO BE FREE FROM LEAKS OR DEFECTS, ANY DEFECTIVE MATERIALS OR WORKMANSHIP AS WELL AS DAMAGE TO THE WORK OF OTHER TRADES RESULTING FROM SAME SHALL BE REPLACED OR REPAIRED AS DIRECTED FOR THE DURATION OF STIPULATED GUARANTEE PERIODS. THE DURATION OF GUARANTEE PERIODS SHALL BE ONE YEAR FROM THE DATE OF THE FINAL ACCEPTANCE OF THE INSTALLATION BY THE OWNER. UNLESS A MORE STRINGENT PERIOD IS STIPULATED ELSEWHERE.

17. ENGINEER'S REVIEW, SHOP DRAWINGS, AND CERTIFICATIONS:

17.1. PREPARE AND SUBMIT DETAILED SHOP DRAWINGS. THE ENGINEER WILL REVIEW SHOP DRAWINGS AND SAMPLES FOR CONFORMANCE WITH THE DESIGN CONCEPT OF THE PROJECT AND THE INFORMATION CONTAINED IN THE CONTRACT DOCUMENTS. THE ENGINEER'S REVIEW OF SHOP DRAWINGS AND SAMPLES IS ONLY FOR THE CONVENIENCE OF THE OWNER IN FOLLOWING THE WORK AND DOES NOT RELIEVE THIS TRADE OF RESPONSIBILITY FOR DEVIATIONS FROM THE REQUIREMENTS OF THE CONTRACT DOCUMENTS. THE ENGINEER'S REVIEW SHALL NOT BE CONSTRUED AS A COMPLETE OR DETAILED CHECK OF THE WORK SUBMITTED, NOR SHALL IT RELIEVE THIS TRADE OF RESPONSIBILITY FOR ERRORS OF ANY SORT IN THE SHOP DRAWINGS AND SAMPLES, OR FROM THE NECESSITY OF FURNISHING ANY WORK REQUIRED BY THE CONTRACT DOCUMENTS WHICH HAVE BEEN OMITTED FROM THE SHOP DRAWING SUBMITTALS.

17.2. NO PART OF THE WORK SHALL BE STARTED IN THE SHOP OR IN THE FIELD UNTIL THE ENGINEER HAS REVIEWED THE SHOP DRAWINGS AND SAMPLES FOR THAT PORTION OF THE WORK. THEREAFTER, THE WORK SHALL BE EXECUTED IN ACCORDANCE WITH THE CONTRACT DOCUMENTS AND THE INDICATED STATUS OF THE REVIEWED SHOP DRAWINGS. PRIOR TO ASSEMBLING THE WORK, THE FOLLOWING SHALL BE SUBMITTED: SCALED FLOOR PLAN AND CEILING DRAWINGS WITH DIMENSIONED LOCATIONS OF ALL PIPING AND EQUIPMENT INCLUDING SIZES, ELEVATIONS, AND APPROPRIATE INDICATION OF COORDINATION BETWEEN STRUCTURAL AND MECHANICAL ELEMENTS. MANUFACTURER'S CATALOGUE CUTS OF ALL EQUIPMENT TO BE USED, SAMPLES OF ALL DEVICES, WHICH WILL BE CLEARLY VISIBLE TO VIEW. ALL SUBMITTALS SHALL BE PROPERLY IDENTIFIED WITH PROJECT NAME, ARCHITECT, ENGINEER, AND SUBCONTRACTOR'S NAME, ADDRESS, AND TELEPHONE NUMBER. PROVIDE CLEAR DETAILED REPRODUCIBLE "AS-BUILT" DRAWINGS UPON COMPLETION OF WORK AND PROVIDE SETS OF THE SAME TO LANDLORD AS DIRECTED.

17.3. THE ARCHITECT AND/OR ENGINEER WILL REVIEW SHOP DRAWINGS AND SAMPLES WITH REASONABLE PROMPTNESS AND WILL RETURN THEM TO THE CONTRACTOR STAMPED TO INDICATE THE APPROPRIATE ACTION AS FOLLOWS:

17.3.1. "NO EXCEPTIONS TAKEN" MEANS THAT FABRICATION, MANUFACTURE OR CONSTRUCTION MAY PROCEED PROVIDING THE SUBMITTAL COMPLIES WITH THE CONTRACT DOCUMENTS.

17.3.2. "MAKE CORRECTIONS NOTED" MEANS THAT FABRICATION, MANUFACTURE OR CONSTRUCTION MAY PROCEED PROVIDING THE SUBMITTAL COMPLIES WITH THE ARCHITECT'S AND/OR ENGINEER'S NOTATIONS AND THE CONTRACT DOCUMENTS. A COPY OF THE CORRECTED SUBMITTAL SHALL BE RETURNED TO THE ARCHITECT AND/OR ENGINEER FOR RECORD. IF, FOR ANY REASON, THE CONTRACTOR CANNOT COMPLY WITH THE NOTATIONS, THE CONTRACTOR SHALL RESUBMIT AS DESCRIBED FOR SUBMITTALS STAMPED "REVISE AND RESUBMIT".

17.3.3. "REVISE AND RESUBMIT" MEANS THAT THE CONTRACTOR MUST COMPLY WITH THE ARCHITECT'S AND/OR ENGINEER'S NOTATIONS AND RESUBMIT BEFORE FABRICATION, MANUFACTURE OR CONSTRUCTION MAY PROCEED. SUBMITTALS STAMPED I

EQUIPMENT ABBREVIATIONS

A	AMPERES
AC	AIR CONDITIONING UNIT
AFF	ABOVE FINISHED FLOOR
BVA	BALANCING VALVE ASSEMBLY
CAF	COMPRESSED AIR FILTER
CC	COOLING COIL
CFM	CUBIC FEET PER MINUTE
CO	CLEANOUT
CODP	CLEANOUT DECK PLATE
CW	COLD WATER
DB	DRY BULB
DIA	DIAMETER
DN	DOWN
DT	DRIP AND TRAP
DWG	DRAWING
DWH	DOMESTIC WATER HEATER
ENT	ENTERING
EQUIP	EQUIPMENT
EWT	ENTERING WATER TEMPERATURE
EXIST	EXISTING
F	FILTER
° F	DEGREED FAHRENHEIT
FIN	FINISHED
FD	FLOOR DRAIN
FLA	FULL LOAD AMPS
FC	FLEXIBLE CONNECTION
FLR	FLOOR
FPM	FEET PER MINUTE
FT	FEET
GA	GAUGE
GAL	GALLON
GPM	GALLONS PER MINUTE
HP	HORSE POWER
HR	HOUR
HT	HEIGHT
HW	HOT WATER
HWR	HOT WATER RETURN
HZ	HERTZ
IN	INCHES
IN W.C.	INCHES WATER COLUMN
JB	JUNCTION BOX
KW	KILOWATT
L	LENGTH
LBS	POUNDS
LBS/HR	POUNDS PER HOUR
LRA	LOCKED ROTOR AMPS
LVG	LEAVING
LWT	LEAVING WATER TEMPERATURE
MAX	MAXIMUM
MC	MECHANICAL CONTRACTOR
MCA	MINIMUM CIRCUIT AMPACITY
MER	MECHANICAL EQUIPMENT ROOM
MHP	MOTOR HORSE POWER
MIN	MINIMUM
MISC	MISCELLANEOUS
NC	NORMALLY CLOSED
NPW	NON POTABLE WATER
NO,	NUMBER
NTS	NOT TO SCALE
OD	OUTSIDE DIAMETER
OPNG	OPENING
P	PUMP
PL	PLATE
PD	PRESSURE DROP
PH	PHASE
PNEU	PNEUMATIC
PRESS	PRESSURE
PS	PRESSURE SWITCH
PSI	POUNDS PER SQUARE INCH
PSIG	POUNDS PER SQUARE INCH GAUGE
PT	PRESSURE TRANSMITTER
PV	PLUG VALVE
QUAN	QUANTITY
REL	RELIEF
RLA	RATED LOAD AMPS
RPM	REVOLUTIONS PER MINUTE
TEMP	TEMPERATURE
TYP	TYPICAL
UON	UNLESS OTHERWISE NOTED
UR	URINAL
US	UTILITY SINK
V	VOLTS
VA	VALVE
VB	VACUUM BREAKER
VEL	VELOCITY
VTR	VENT THROUGH ROOF
W	WIDTH
W/	WITH
W/O	WITHOUT
WC	WATER CLOSET
WPD	WATER PRESSURE DROP

PLUMBING PIPING SYMBOLS

	NEW WORK
	EXISTING
	COLD WATER PIPING
	HOT WATER PIPING
	HOT WATER RETURN PIPING
—S—	EXISTING SANITARY PIPING BELOW GROUND
—S—	SANITARY PIPING ABOVE GROUND
—S—	SANITARY PIPING BELOW GROUND
	VENT PIPING
—CA—	COMPRESSED AIR PIPING
—RO—	RO WATER PIPING

SYMBOLS

	PIPE DROPPING UP
	PIPE RISING UP
	PIPE TO BE DEMOLISHED
	CHECK VALVE
	BALL VALVE
	STRAINER WITH BLOWDOWN VALVE AND HOSE BIB
	FLANGED CONNECTION
	FLEXIBLE CONNECTOR
	PRESSURE GAUGE
	THERMOMETER
	AUTOMATIC TWO WAY CONTROL VALVE
	ROOF DRAIN (RD)
	FLOOR DRAIN (FD)
	HOSE BIB OR WALL HYDRANT
	FLOOR RECEPTOR (FR)
	PUMP
C.O.	CLEAN OUT DECK PLATE
	WATER HAMMER ARRESTER
	PRESSURE & TEMPERATURE RELIEF VALVE
	UNION
	BUTTERFLY VALVE
	GATE VALVE
	GLOBE VALVE
	FLOW BALANCING VALVE
	PLUG VALVE
	PIPE CAP
	FLOW IN DIRECTION OF ARROW
	CONNECT NEW TO EXISTING
	FLOAT & THERMOSTATIC TRAP
	SOLENOID VALVE
	CLEAN OUT
	PRESSURE REDUCING VALVE

DRAWING SYMBOLS

WC / X	EQUIPMENT TAG
	SECTION NUMBER & DRAWING NUMBER
X	DETAIL NUMBER
X	SHEET NOTE

NOTE:

ALL ABBREVIATIONS AND SYMBOLS MAY NOT APPEAR ON THE DRAWINGS FOR THIS PROJECT.

PLUMBING NOTES:

1. ALL NEW PLUMBING WORK SHALL CONFORM TO THE REFERENCED CODES TABLE ON THIS DRAWING.
2. ALL MATERIALS USED SHALL BE NEW, UNLESS OTHERWISE NOTED.
3. THE PLUMBING CONTRACTOR SHALL ASSUME ALL RESPONSIBILITY FOR HIS WORK AND MATERIALS AND SHALL GUARANTEE THE WORK OF HIS CONTRACT FOR A PERIOD OF ONE YEAR FROM THE DATE OF COMPLETION OF HIS WORK.
4. PLUMBING CONTRACTOR SHALL CONSULT AND COOPERATE WITH THE GENERAL CONTRACTOR, HEATING AND VENTILATING CONTRACTOR, ELECTRICAL CONTRACTOR, ETC., IN ORDER TO AVOID INTERFERENCE DURING INSTALLATION OF PIPING, EQUIPMENT, ETC.
5. PLUMBING CONTRACTOR SHALL PERFORM ALL TESTS REQUIRED BY THE LOCAL AUTHORITIES HAVING JURISDICTION AND SUBMIT THE WORK TO ALL INSPECTIONS REQUIRED BY THEM AT NO ADDITIONAL COST TO THE CLIENT. CONTRACTOR SHALL FURNISH ALL CERTIFICATES OF INSURANCE AS REQUIRED BY THE LAW.
6. PLUMBING CONTRACTOR SHALL MAKE ALL FINAL CONNECTIONS TO ALL PLUMBING EQUIPMENT REGARDLESS OF WHETHER SHOWN HERE-IN WITHOUT ANY ADDITIONAL COST TO THE CLIENT.
7. PLUMBING CONTRACTOR SHALL CHECK JOB SITE FOR EXISTING PLUMBING AND SIZES BEFORE BIDDING ON THE JOB.
8. PLUMBING CONTRACTOR SHALL DO ALL NECESSARY CUTTING, EXCAVATION, BACK-FILLING FOR THE INSTALLATION OF NEW PLUMBING AND PATCHING BACK TO ORIGINAL STATE.
9. ALL NEW PLUMBING CONNECTIONS TO THE NEW PLUMBING EQUIPMENT SHALL BE IN ACCORDANCE WITH THE NATIONAL STANDARD PLUMBING CODE AND THE MANUFACTURER'S SPECIFICATIONS.
10. ALL NEW SOIL, WASTE, VENT PIPING AND FITTINGS ABOVE FINISH FLOOR SHALL BE NO-HUB CAST IRON OR GALVANIZED.
11. ALL NEW COLD WATER PIPING, HOT WATER PIPING AND FITTINGS SHALL BE COPPER TUBING TYPE "L" WITH COPPER FITTINGS AND LEAD FREE SOLDER CONNECTION.
12. ALL NEW PIPING HANGERS AND SUPPORTS SHALL COMPLY WITH THE NATIONAL STANDARD PLUMBING CODE.
13. ALL NEW COLD AND HOT WATER SUPPLY PIPING SHALL HAVE QUARTER-TURN ANGLE STOP VALVES INSTALLED UNDER ALL NEW PLUMBING FIXTURES.
14. ALL NEW EXPOSED PIPING AND FITTINGS AT FIXTURES SHALL BE HEAVY PIPING PASSING THROUGH WALLS ON BOTH SIDES.
15. PROVIDE HEAVY CHROME PLATED ESCUTCHEON PLATES AROUND ALL NEW PIPING PASSING THROUGH WALLS ON BOTH SIDES.
16. PLUMBING CONTRACTOR SHALL SUBMIT ALL SHOP DRAWINGS ON NEW PLUMBING FIXTURES AND EQUIPMENT FOR APPROVALS BEFORE INSTALLATION OF SAME.

KEY TO SYMBOLS

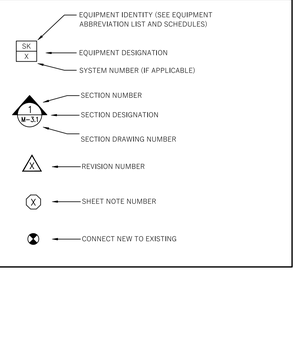

GENERAL CONSTRUCTION NOTES:

1. CONTRACTOR SHALL CHECK AND VERIFY THE EXACT LOCATION OF ALL PIPE PENETRATIONS AND MAKE CERTAIN THERE ARE NO OBSTRUCTIONS AND INTERFERENCES.
2. CONTRACTOR SHALL REFER TO AND COORDINATE WITH ARCHITECTURAL DRAWINGS AND WORK FOR EXACT LOCATION OF ALL PLUMBING FIXTURES.
3. CONTRACTOR SHALL REFER TO AND COORDINATE WITH ARCHITECTURAL AND STRUCTURAL DRAWINGS, INCLUDING WORK FOR ALL CONCRETE PITS, UNDERGROUND PIPE SUPPORT AND OTHER RELEVANT DETAILS.
4. UNDERGROUND PIPING REQUIREMENTS FOR PROTECTING THE PIPES, BACK FILLING AND UNIFORM SOIL BEARING ALONG THE LENGTH OF THE PIPE SHALL BE AS PER PC306.3 REFER TO PLUMBING DETAILS & STRUCTURAL DRAWINGS FOR PIPE SUPPORT AND ENCASEMENT DETAILS.
5. CONTRACTOR SHALL COORDINATE ALL UNDER SLAB PIPE LAYOUT WITH FOUNDATION PLAN.
6. ALL PIPES PENETRATED THROUGH WALLS, FLOORS, AND UNDERGROUND FOUNDATION WALLS SHALL BE PROVIDED WITH REQUIRED OPENINGS, SLEEVES, SEALS AND PACKING.
7. THE PLUMBING CONTRACTOR SHALL ASSUME ALL RESPONSIBILITY FOR HIS WORK AND MATERIALS AND SHALL GUARANTEE THE WORK OF HIS CONTRACT FOR A PERIOD OF ONE YEAR FROM THE DATE OF COMPLETION OF HIS WORK.
8. PLUMBING CONTRACTOR SHALL DO ALL NECESSARY CUTTING, EXCAVATION, BACK-FILLING FOR THE INSTALLATION OF NEW PLUMBING AND PATCHING BACK TO ORIGINAL STATE.
9. THROUGHOUT THE DURATION OF THE PROJECT REFRAIN FROM ACTIONS THAT COULD LEAD TO THE FILING OF CLAIMS OF LIEN BY SUBCONTRACTORS, SUPPLIERS OF MATERIALS, LABOR, SERVICE, EQUIPMENT, OR ANY OTHER INDIVIDUAL OR COMPANY SO ENTITLED UNDER GOVERNING LAWS AND REGULATIONS UNLESS REASONABLE AND JUSTIFIABLE CAUSE CAN BE SHOWN. APPROVAL FOR PAYMENT SHALL BE CONTINGENT UPON THE CONTRACTOR'S OBTAINING AND FURNISHING TO THE OWNER SIGNED RELEASES FROM SUCH INDIVIDUALS OR COMPANIES.
10. THE CONTRACTOR IS RESPONSIBLE FOR CHECKING CONTRACT DOCUMENTS, FIELD CONDITIONS, AND DIMENSIONS FOR ACCURACY AND CONFIRMING THAT WORK IS BUILDABLE AS SHOWN BEFORE PROCEEDING WITH CONSTRUCTION. IF THERE ARE ANY QUESTIONS REGARDING THESE OR OTHER COORDINATION ISSUES, THE CONTRACTOR SHALL SUBMIT THEM, IN WRITING, TO THE ENGINEER AND IS RESPONSIBLE FOR OBTAINING A WRITTEN CLARIFICATION FROM THE ENGINEER BEFORE PROCEEDING WITH WORK IN QUESTION, OR RELATED WORK.
11. EXECUTE WORK IN ACCORDANCE WITH ANY AND ALL APPLICABLE LOCAL, STATE, FEDERAL CODES, MANUFACTURER'S RECOMMENDATIONS, TRADE AND REFERENCE STANDARDS INCLUDING BUT NOT LIMITED TO: UBC, SEISMIC CODES, NEC, NFPA, ASME, UMC, LATEST ENFORCED EDITIONS.
12. THERE SHALL BE NO SUBSTITUTION OF MATERIALS WHERE A MANUFACTURER IS SPECIFIED, WHERE THE TERM "OR EQUAL" IS USED, THE ENGINEER ALONE SHALL DETERMINE EQUALITY BASED UPON INFORMATION SUBMITTED BY THE CONTRACTOR.
13. THE CONTRACTOR SHALL BE RESPONSIBLE FOR THE DISTRIBUTION OF DRAWINGS TO ALL TRADES UNDER HIS JURISDICTION.
14. DO NOT PROCEED WITH ANY WORK REQUIRING ADDITIONAL COMPENSATION BEYOND THE CONTRACT AMOUNT WITHOUT WRITTEN AUTHORIZATION FROM THE OWNER. FAILURE TO OBTAIN AUTHORIZATION SHALL INVALIDATE ANY CLAIM FOR EXTRA COMPENSATION.
15. UPON NOTIFICATION OF COMPLETION OF THE WORK AND DELIVERY OF THE CONTRACTOR'S PUNCH-LIST, THE ENGINEER SHALL PREPARE A PUNCH- LIST OF CORRECTIONS. UNSATISFACTORY AND/OR INCOMPLETE WORK, FINAL PAYMENT WILL BE CONTINGENT UPON THE COMPLETION OF THESE ITEMS UNDER THE TERMS OF THE OWNER/CONTRACTOR AGREEMENT.
16. ALL MATERIALS SHALL BE NEW, UNUSED, AND OF THE HIGHEST QUALITY IN EVERY RESPECT UNLESS OTHERWISE NOTED. MANUFACTURED MATERIALS AND EQUIPMENT SHALL BE INSTALLED AS PER MANUFACTURER'S RECOMMENDATIONS AND INSTRUCTIONS, U.O.N.
17. THE CONTRACTOR AND SUBCONTRACTORS SHALL PURCHASE AND MAINTAIN CERTIFICATIONS OF INSURANCE WITH RESPECT TO WORKERS COMPENSATION, PUBLIC LIABILITY AND PROPERTY DAMAGE FOR THE LIMITS AS REQUIRED BY LAW. THE CONTRACTOR SHALL BE RESPONSIBLE FOR INITIATING, MAINTAINING, AND SUPERVISING ALL SAFETY PRECAUTIONS IN CONNECTION WITH THE WORK.
18. VERIFY IN THE FIELD, THAT NO CONFLICTS EXIST WHICH WOULD PROHIBIT THE LOCATION OF ANY AND ALL MECHANICAL, TELEPHONE, ELECTRICAL, LIGHTING, PLUMBING, AND SPRINKLER EQUIPMENT (TO INCLUDE ALL REQUIRED PIPING, DUCTWORK, AND CONDUIT) AND THAT ALL REQUIRED CLEARANCES FOR INSTALLATION AND MAINTENANCE OF ABOVE EQUIPMENT ARE PROVIDED.
19. CONTRACTOR SHALL BE RESPONSIBLE FOR HIS WORK WITH ITS COMPLETION AND FINAL ACCEPTANCE AND SHALL REPLACE ANY OF SAME WHICH MAY BE DAMAGED, LOST OR STOLEN, WITHOUT ADDITIONAL COSTS TO THE OWNER.
20. ALL WELDING/BURNING WORK SHALL BE PROPERLY VENTILATED AND PURGED.
21. THE CONTRACTOR SHALL HAVE AN ON-SITE FOREMAN DURING ALL ASPECTS OF WORK.

MATERIAL SCHEDULE

SYSTEMS	PIPE											FITTINGS							JOINTS						
	REQUIRED	SERVICE CL PIPE (HUB & SPIGOT)	NO-HUB CL PIPE	P.V.C. SCH. 40 DRAINAGE PIPE	C.P.V.C. SCH. 40	BLACK STEEL	BLACK STEEL GAS PIPE	GALVANIZED STEEL	COPPER TUBING TYPE "L"	COPPER TUBING TYPE DWV	DUCTILE IRON PIPE	PE4710 DUAL WALL HDPE	SERVICE CL FITTINGS (HUB & SPIGOT)	NO-HUB CL FITTINGS	P.V.C. DWV, FABRICATED	C.P.V.C. SCH. 40	BLACK STEEL	GALVANIZED STEEL	COPPER SOLDER FITTINGS	FLANGED DUCTILE IRON PIPE	ASTM F1960 LISTED	ASTM F1807 LISTED	P.V.C. SOLVENT CEMENT	CPVC SOLVENT CEMENT	THREADED	BUTT FUSION	SOLDERED	ASSURED SERVICE IRON PIPE	COLD EXPANSION RING
SANITARY BUILDING DRAIN (UNDER GROUND)	●	●		A								●			A						●	A							
SANITARY BUILDING DRAIN	●		●	A									●		A						●	A							
SANITARY STACKS	●		●	A									●		A						●	A							
SANITARY BRANCHES	●		●	A									●		A						●	A							
VENT STACKS	●		●	A									●		A						●	A							
VENT BRANCHES	●		●	A									●		A						●	A							
C.W. (SERVICE)	●	●		A								●			A						●	A							
C.W. (DISTRIBUTION)	●		●	A									●		A						●	A							
H.W. (DISTRIBUTION)	●		●	A									●		A						●	A							
	●		●	A									●		A						●	A							
											●									●							●		

NOTES:

1. 'A' - PROVIDE DEDUCT ALTERNATE PRICE TO INSTALL ALTERNATE MATERIAL
2. ALL MATERIALS INSTALLED WITHIN A PLENUM ARE TO HAVE A 25 FLAME SPREAD & 50 SMOKE DEVELOPED WHENTESTED ACCORDING TO ASTM E84 OR BE INSULATED WITH 3M FIRE BARRIER PLENUM WRAP 5A+, OR APPROVED EQUAL, SO AS TO COMPLY WITH THE ABOVE REQUIREMENTS.

REFERENCE CODES:

1. INTERNATIONAL BUILDING CODE 2021, NJ EDITION
2. INTERNATIONAL FIRE CODE 2018
3. INTERNATIONAL MECHANICAL CODE 2021
4. NATIONAL STANDARD PLUMBING CODE 2021, NJ EDITION
5. INTERNATIONAL FUEL AND GAS CODE 2018
6. NATIONAL ELECTRICAL CODE 2020
7. ASHRAE 90.1 - 2016
8. BARRIER FREE SUBCODE: ICC/ANSI A117.1-2009

Key Plan

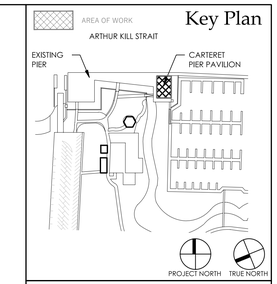

PROJECT

CARTERET PIER PAVILION

WATERFRONT PARK
200 MIDDLESEX AVENUE BLOCK 201 LOT 4
CARTERET, NEW JERSEY 07008

GEOTECHNICAL & STRUCTURAL ENGINEER

McLaren Technical Services, Inc.
Woodcliff Lake, New Jersey 07677
201.775.6000 | www.mgmclaren.com

MEP ENGINEER

KeRi ENGINEERING PC
911 Springfield Rd, Suite 2
Union, NJ 07083
T : 973.866.KeRi (5374)
F : 973.866.5370
W : keriengineering.com

CIVIL ENGINEER

1460 RT. 9 SOUTH
HOWELL, NEW JERSEY 07731
INFO@CMCBUSA1.COM
732.462.7400

KITCHEN DESIGN CONSULTANT

44 ST. JOHN STREET
GOSHEN, NEW YORK
845.360.5112
INFO@RRADESIGNS.COM

DMR
ARCHITECTURE
PLANNING
ENGINEERING
INTERIORS
CONSULTING
www.dmrarchitects.com

MEMBERS OF THE AMERICAN INSTITUTE OF ARCHITECTS

LLOYD A. ROSENBERG	NJ - AI 05526
KURT A. VIERHEILIG	NJ - AI 17809
PRADEEP KAPOOR	NY - 042197
FERNANDO ROBLEDO	NY - 033804
JANET PINI	NJ - AI 02102900

NOT VALID FOR BUILDING UNLESS SIGNED AND SEALED BY ARCHITECT

777 Terrace Avenue, 6th floor
Hasbrouck Heights, New Jersey 07604
Tel 201 - 288 - 2600 || Fax 201 - 288 - 2662

NCARB NATIONAL COUNCIL OF ARCHITECTURAL REGISTRATION BOARDS

CO - 306 184 CT - 05438 NJ - AI 05526
NJ-BOARD OF PROFESSIONAL PLANNERS) - LI 01584
NY - 013025-1 PA - RA - 13437-B

DWG TITLE :

ABBREVIATIONS SYMBOLS & NOTES

SCALE As indicated

DATE	DESCRIPTION	DRN	CHK
06/26/2023	RELEASED FOR BID	DD	MP

REV.	DATE	DESCRIPTION		

PROJECT NO.	SHEET NO.
5146	P-001

Copyright © 2022 by DMR

PLOT DATE: 11/4/2022 3:33:09 PM

PLUMBING FIXTURE SCHEDULE

FIXTURE TAG	DESCRIPTION	MANUFACTURER	MODEL	FAUCET/TRIM	COLD	HOT	WFU	DFU	MANUFACTURER		REMARKS
									TRAP	VENT	
SK-1	STAINLESS STEEL 3 COMPARTMENT SINK	IMC/TEDDY	SCS-34-2020-20RL	BY ARCHITECT	½"	½"	3	6	2"	2"	PROVIDE INDIRECT DRAIN TO FUNNEL DRAIN TYPE WITH 1" AIR GAP
SK-2	STAINLESS STEEL SINGLE BOWL, ADA COMPLIANT	IMC/TEDDY	WS-1D	BY ARCHITECT	½"	½"	1	2	2"	1½"	-
SK-3	BAR SINK	KROWNE	KR24--,X68A	BY ARCHITECT	½"	½"	1	2	2"	1½"	
SK-4	BAR AREA, 3 COMPARTMENT SINK	KROWNE	KR19-53C	BY ARCHITECT	½"	½"	3	6	2"	2"	
IM-1	ICE MAKER WITH BIN	MANITOWOC	IDT0450A-161/D-400	BY ARCHITECT	½"	-	-	-	-	-	PROVIDE WITH ARCTIC PURE WATER FILTERS PROVIDE INDIRECT DRAIN TO FUNNEL DRAIN TYPE WITH 1" AIR GAP
SS-1	TERRAZZO-WARE MOP SINK	ACORN	TDF-24	AMERICAN STANDARD 8344.212	½"	½"	2	3	2"	2"	PROVIDE WITH INTEGRAL VACUUM BREAKER AND SUPPLY STOPS

NOTES:
1. ADA COMPLIANT DESIGNATED FIXTURES SHALL BE INSTALLED TO MEET ICC/ANSI 117.1.
2. FIXTURES ARE BY OWNER/ARCHITECT. CONTRACTOR TO COORDINATE FIXTURE SCHEDULE WITH OWNER/ARCHITECT.

BACKFLOW PREVENTER / VACUUM BREAKER SCHEDULE

APPLICATION	MFR.	MODEL NO.	DESCRIPTION
ICE MAKERS	WATTS	LFN9C	DUAL CHECK WITH ATMOSPHERIC VENT

NOTES:
1. ADDITIONAL BACKFLOW PREVENTER OR VACUUM BREAKERS ARE NOT REQUIRED WHERE SUCH DEVICES ARE INSTALLED INTEGRAL TO THE EQUIPMENT.

WATER HAMMER / SHOCK ARRESTOR SCHEDULE

TAG	FIGURE NO.	SFU RATING	SIZE	HEIGHT
SA-1	5005	1-11	¾"	4"
SA-2	5010	12-32	1"	5"

FLOOR DRAIN SCHEDULE

TAG	LOCATION	MAKE	MODEL	DESCRIPTION	OUTLET SIZE	TRAP SEAL	TRAP PRIMER
FD-1	MECHANICAL LOFT	ZURN	Z507-P	7" MEDIUM DUTY C.I. DRAIN	3"	4"	NO
FD-2	SCULLERY	ZURN	ZN415B	6" MEDIUM DUTY C.I. DRAIN	3"	4"	NO

NOTES:
1. ALL TRAPPED FLOOR DRAINS SHALL BE INSTALLED WITH AN ASSE 1072 TRAP SEAL PROTECTION DEVICE.

ELECTRIC HOT WATER HEATER SCHEDULE

EQUIPMENT NO.	LOCATION	ELEMENT POWER (KW)	HEATER RECOVERY GPH @ 90° RISE	GALLON CAPACITY	SYSTEM CONNECTION (IN.)	HxDIA (")	SHIPPING WEIGHT (LBS)	ELECTRICAL		MANUFACTURER MAKE MODEL NUMBER	REMARKS
								FLA	VOLTS/ϕ/HZ		
WH-1	MECHANICAL ROOM	18	80	80	1 ½"	61.25 X 26	378	50	208/3/60	BRADFORD WHITE CHD80A18	SEE NOTES

NOTES:
1. HW HEATER SHALL BE INSTALLED IN FULL COMPLIANCE WITH THE MANUFACTURERS REQUIREMENTS.
2. PROVIDE ALL APPURTENANCES IN ACCORDANCE WITH THE INSTALLATION DETAIL.
3. PROPER INSTALLATION AND FUNCTIONALITY IN THE FIELD IS THE RESPONSIBILITY OF THE HEATING CONTRACTOR.
4. PROVIDE CONDENSATE NEUTRALIZATION KIT.

EXPANSION TANK

SYSTEM TAG	LOCATION	DIAMETER (IN)	HEIGHT (IN)	VOLUME (GAL)	WORKING PRESSURE (PSIG)	ACCEPTANCE VOLUME (GAL)	SYSTEM CONNECTION (IN)	PRESET CHARGE	MANUFACTURER MODEL No.	REMARKS
ET-1	MECHANICAL LOFT	12	14	5	150	3.3	¾"	40	BELL & GOSSET PTA-12	

SUMP PUMP SCHEDULE

NO.	SERVICE	LOCATION	NUMBER OF PUMP	GPM PER PUMP	FT TDH	MOTOR DATA					BASIS OF DESIGN	MODEL	REMARKS
						HP	RPM	VOLTAGE	PH	HZ			
SP-1	SEWAGE EJECTOR PUMP	SCULLERY	(1)	60	18.00	½	3500	115	1	60	LIBERTY	404L	1
SP-2	SEWAGE EJECTOR PUMP	BAR AREA ALL IN ONE SINK	(1)	60	18.00	½	3500	115	1	60	LIBERTY	404L	1
SP-3	SEWAGE EJECTOR PUMP	BAR AREA 3 COMPARTMENT SINK	(1)	60	18.00	½	3500	115	1	60	LIBERTY	404L	1

REMARKS:
1. PROVIDE 1-YEAR PARTS WARRANTY FOR PUMP.

Key Plan

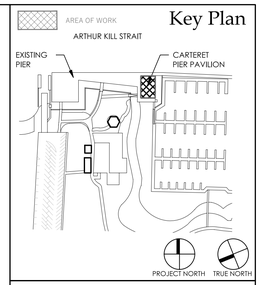

PROJECT
CARTERET PIER PAVILION
WATERFRONT PARK
200 MIDDLESEX AVENUE BLOCK 201 LOT 4
CARTERET, NEW JERSEY 07008

GEOTECHNICAL & STRUCTURAL ENGINEER
McLaren Technical Services, Inc.
Woodcliff Lake, New Jersey 07677
201.775.6000 | www.mgmclaren.com

MEP ENGINEER
KeRi ENGINEERING PC
911 Springfield Rd, Suite 2
Union, NJ 07083
T : 973.866.KeRi (5374)
F : 973.866.5370
W : keriengineering.com

CIVIL ENGINEER
1460 RT. 9 SOUTH
HOWELL, NEW JERSEY 07731
INFO@CMESA1.COM
732.462.7400

KITCHEN DESIGN CONSULTANT
44 ST. JOHN STREET
GOSHEN, NEW YORK
845.360.5112
INFO@RRADESIGNS.COM

DMR
ARCHITECTURE
PLANNING
ENGINEERING
INTERIORS
CONSULTING
www.dmrarchitects.com

MEMBERS OF THE AMERICAN INSTITUTE OF ARCHITECTS
LLOYD A. ROSENBERG NJ - AI 05526
KURT A. VIERHEILIG NJ - AI 17809
PRADEEP KAPOOR NY - 042197
FERNANDO ROBLEDO NY - 033804
JANET PINI NJ - AI 02102900

NOT VALID FOR BIDDING UNLESS SIGNED AND SEALED BY ARCHITECT
777 Terrace Avenue, 6th Floor
Hasbrouck Heights, New Jersey 07604
Tel 201 - 288 - 2600 || Fax 201 - 288 - 2662

NCARB NATIONAL COUNCIL OF ARCHITECTURAL REGISTRATION BOARDS
CO - 306 184 CT - 05438 NJ - AI 05526
NJ BOARD OF PROFESSIONAL PLANNERS | - LI 01584
NY - 013025-1 PA - RA - 13437-8

DWG TITLE :
PLUMBING SCHEDULES

SCALE As indicated

DATE	DESCRIPTION	DRN	CHK
06/26/2023	RELEASED FOR BID	DD	MP

REV.	DATE	DESCRIPTION		

PROJECT NO. 5146
SHEET NO. P-010

Copyright © 2022 by DMR
PLOT DATE: 11/4/2022 3:33:09 PM

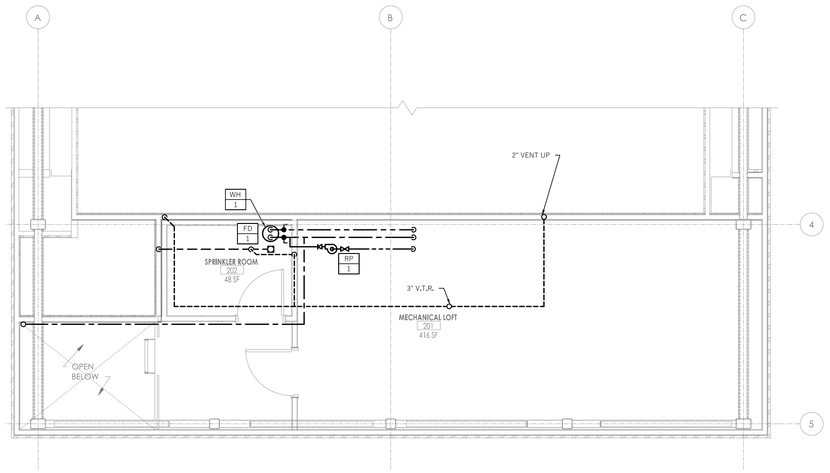

1 PLUMBING ATTIC PLAN - NEW WORK

SCALE: 1/4" = 1'-0"

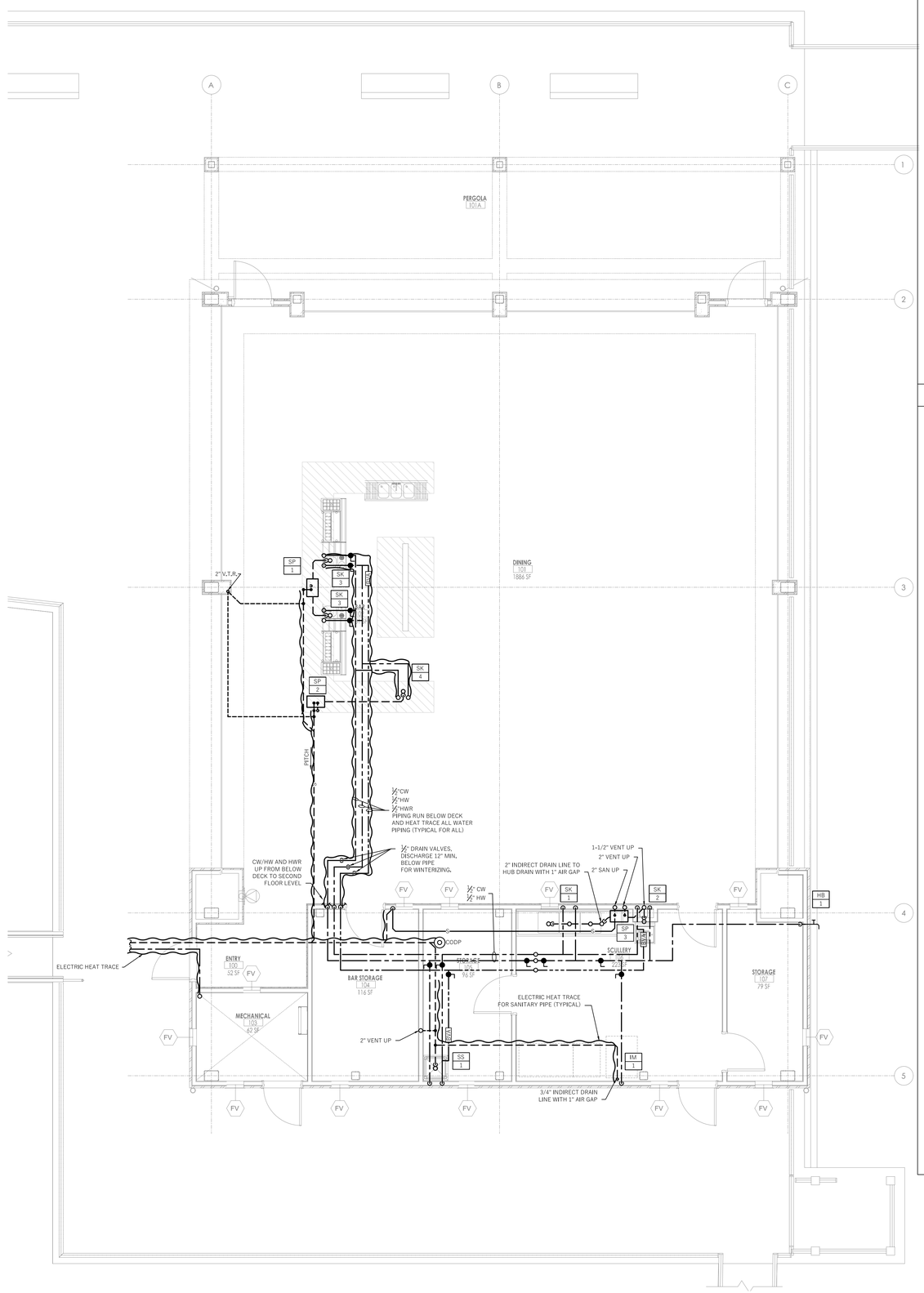

2 PLUMBING GROUND FLOOR PLAN - NEW WORK

SCALE: 1/4" = 1'-0"

GENERAL NOTES:

1. CONTRACTOR SHALL BE RESPONSIBLE TO PROTECT THE AREA OF WORK FROM ANY DAMAGE, DUST AND DEBRIS.
2. CONTRACTOR SHALL FIELD VERIFY EXISTING CONDITIONS BEFORE PROCEEDING WITH ANY WORK.
3. CONTRACTOR SHALL COORDINATE WORK WITH OTHER TRADES BEFORE PROCEEDING WITH ANY WORK.
4. REFER TO ELECTRICAL DRAWINGS FOR MORE INFORMATION ON HEAT TRACING. ALL EXPOSED PIPING OR VALVES TO THE ELEMENTS SHALL BE HEAT TRACED.
5. CONTRACTOR SHALL PROVIDE ALL REQUIRED VALVING AND ACCESSORIES FOR A COMPLETE OPERATING SYSTEM.

SHEET NOTES:

Key Plan

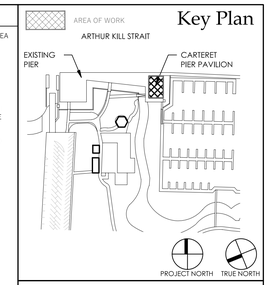

PROJECT

CARTERET PIER PAVILION

WATERFRONT PARK
200 MIDDLESEX AVENUE BLOCK 201 LOT 4
CARTERET, NEW JERSEY 07008

GEOTECHNICAL & STRUCTURAL ENGINEER

McLaren Technical Services, Inc.
Woodcliff Lake, New Jersey 07677
201.775.6000 | www.mgmclaren.com

MEP ENGINEER

KeRi ENGINEERING PC
911 Springfield Rd, Suite 2
Union, NJ 07083
T : 973.866.KeRi (5374)
F : 973.866.5370
W : keriengineering.com

CIVIL ENGINEER

1460 RT. 9 SOUTH
HOWELL, NEW JERSEY 07731
INFO@CMEUSA1.COM
732.462.7400

KITCHEN DESIGN CONSULTANT

44 ST. JOHN STREET
GOSHEN, NEW YORK
845.360.5112
INFO@RRADESIGNS.COM

DMR
ARCHITECTURE
PLANNING
ENGINEERING
INTERIORS
CONSULTING
www.dmrarchitects.com

MEMBERS OF THE AMERICAN INSTITUTE OF ARCHITECTS

LLOYD A. ROSENBERG	NJ - AI 05526
KURT A. VIERHBLIG	NJ - AI 17809
PRADEEP KAPOOR	NY - 042197
FERNANDO ROBLEDO	NY - 033804
JANET PINI	NJ - AI 02102900

NOT VALID FOR BIDDING UNLESS SIGNED AND SEALED BY ARCHITECT

777 Terrace Avenue, 6th Floor
Hasbrouck Heights, New Jersey 07604
Tel 201 - 288 - 2600 || Fax 201 - 288 - 2662

NCARB NATIONAL COUNCIL OF ARCHITECTURAL REGISTRATION BOARDS

CO - 306 184 CT - 05438 NJ - AI 05526
NJ BOARD OF PROFESSIONAL PLANNERS) - LI 01584
NY - 013025-1 PA - RA - 13437-8

DWG TITLE :

PLUMBING GROUND FLOOR - NEW WORK

SCALE As indicated

DATE	DESCRIPTION	DRN	CHK
06/26/2023	RELEASED FOR BID	DD	MP

REV.	DATE	DESCRIPTION

PROJECT NO.	SHEET NO.
5146	P-101

Copyright © 2022 by DMR

PLOT DATE: 11/4/2022 3:33:09 PM

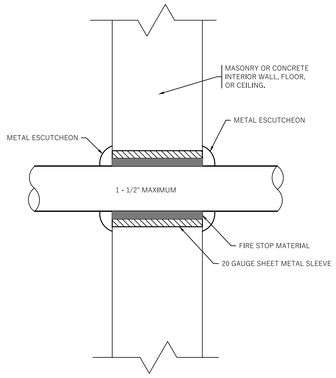

1 PIPE PENETRATION IN INTERIOR WALL/FLOOR/CEILING

SCALE: N.T.S.

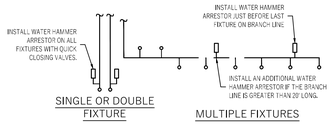

PDI SIZE	PIPE SIZE	FIXTURE UNIT LOAD
A	½"	1–11
B	¾"	12–32
C	1"	33–60
D	1¼"	61–113
E	1½"	114–154
F	2"	154–330

WATER SUPPLY FIXTURE UNIT (WSFU)		
FIXTURE	COLD	HOT
VALVE WATER CLOSET	5	--
URINAL	4	--
LAVATORY / SINK	1.5	1.5
JANITOR'S SINK	3	3

GENERAL NOTES:

1. WATER HAMMER ARRESTERS SHALL BE HAVE PISTON AND O-RING CONSTRUCTION WITH PDI-WH-201, ASSE # 1010 AND ANSI # A112.26.1M CERTIFICATION. INSTALL IN HORIZONTAL OR VERTICAL POSITION, BUT NEVER UPSIDE DOWN. SIZE THE LIMITS AS SHOWN PER THE TABLES SHOWN ABOVE.

2 WATER HAMMER ARRESTOR DETAIL

SCALE: N.T.S.

NOTE:
PROVIDE RATED 24"x24" ACCESS DOOR WHEN INSTALLED ABOVE GYP. CEILING OR BEHIND GYP. WALLS

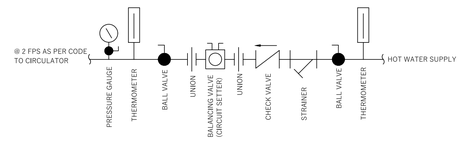

3 DETAIL - TYPICAL BALANCING VALVE ASSEMBLY (BVA)

SCALE: N.T.S.

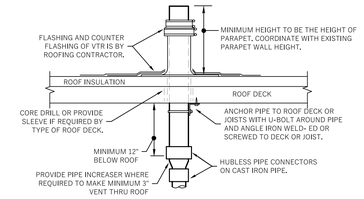

GENERAL NOTES:

1. REFER TO PLANS FOR VTR PIPE SIZES AND LOCATIONS. LOCATE VTR MINIMUM THREE FEET FROM PROPERTY LINE, OR TEN FEET HORIZONTAL OR THREE FEET VERTICAL ABOVE ANY BUILDING OPENING OR FRESH AIR INTAKE, OR ONE FOOT FROM ANY VERTICAL SURFACE. LOCATE VTR MINIMUM 18" FROM PARAPET, EXPANSION JOINT, EQUIPMENT CURB, ETC. OFFSET IN CEILING SPACE WHERE REQUIRED TO MEET THESE CONDITIONS.

4 VENT THROUGH ROOF (VTR) DETAIL

SCALE: N.T.S.

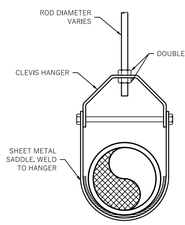

5 HANGER DETAIL

SCALE: N.T.S.

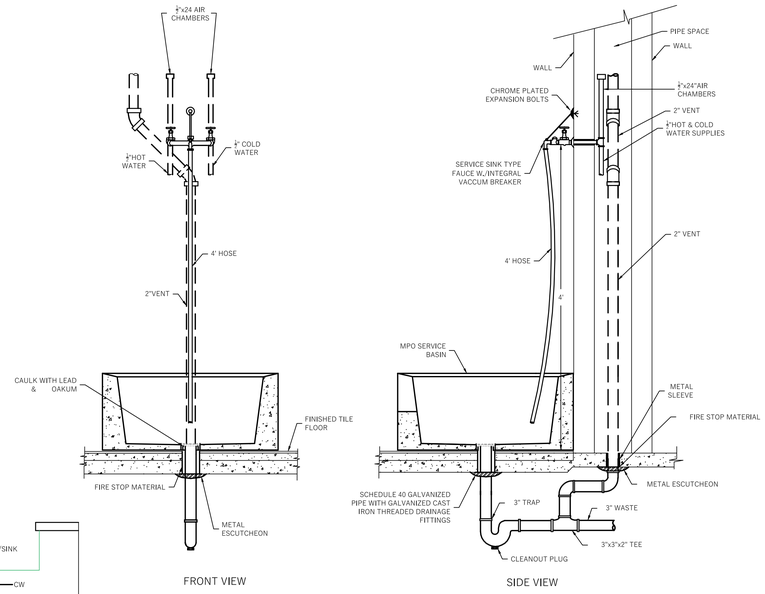

6 PIPING FOR JANITOR CLOSET MOP SERVICE BASIN

SCALE: N.T.S.

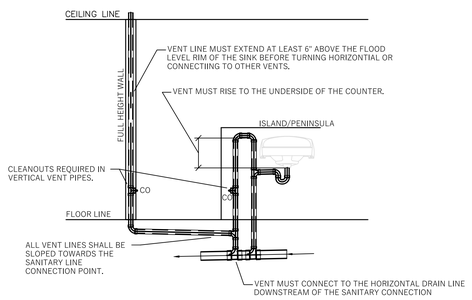

7 ISLAND/PENINSULA SINK VENTING DETAIL

SCALE: N.T.S.

NOTE:
ANCHOR OR SUPPORT WATER HEATER IN SEISMIC AREAS.

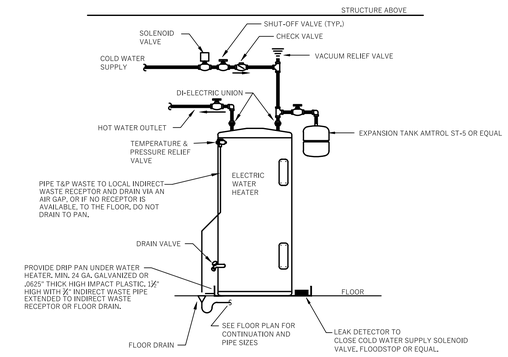

8 DETAIL - ELECTRIC WATER HEATER

SCALE: N.T.S.

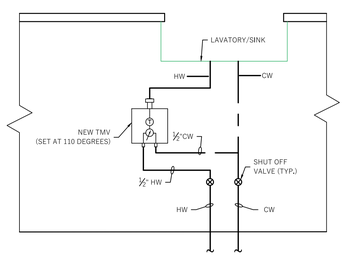

9 DETAIL - THERMOSTATIC MIXING VALVE FOR LAVATORY OR SINK

SCALE: N.T.S.

Key Plan

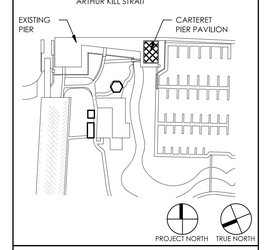

PROJECT
CARTERET PIER PAVILION
WATERFRONT PARK
200 MIDDLESEX AVENUE BLOCK 201 LOT 4
CARTERET, NEW JERSEY 07008

GEOTECHNICAL & STRUCTURAL ENGINEER

McLaren Technical Services, Inc.
Woodcliff Lake, New Jersey 07677
201.775.6000 | www.mgmclaren.com

MEP ENGINEER

KeRi ENGINEERING PC
911 Springfield Rd, Suite 2
Union, NJ 07083
T : 973.866.KeRi (5374)
F : 973.866.5370
W : keriengineering.com

CIVIL ENGINEER

1460 RT. 9 SOUTH
HOWELL, NEW JERSEY 07731
INFO@KCMEGIA1.COM
732.462.7400

KITCHEN DESIGN CONSULTANT

44 ST. JOHN STREET
GOSHEN, NEW YORK
845.360.5112
INFO@RRADESIGNS.COM

DMR
ARCHITECTURE
PLANNING
ENGINEERING
INTERIORS
CONSULTING
www.dmrarchitects.com

MEMBERS OF THE AMERICAN INSTITUTE OF ARCHITECTS

LLOYD A. ROSENBERG	NJ - AI 05526
KURT A. VIERHEILIG	NJ - AI 17809
PRADEEP KAPOOR	NY - 042197
FERNANDO ROBLEDO	NY - 033804
JANET PINI	NJ - AI 02102900

NOT VALID FOR BIDDING UNLESS SIGNED AND SEALED BY ARCHITECT

777 Terrace Avenue, 6th Floor
Hasbrouck Heights, New Jersey 07604
Tel 201 - 288 - 2600 || Fax 201 - 288 - 2662

NCARB NATIONAL COUNCIL OF ARCHITECTURAL REGISTRATION BOARDS

CO - 306 184 CT - 05438 NJ - AI 05526
NJ-BOARD OF PROFESSIONAL PLANNERS) - LI 01584
NY - 013025-1 PA - RA - 13437-B

DWG TITLE :
PLUMBING DETAILS

SCALE As indicated

DATE	DESCRIPTION	DRN	CHK
06/26/2023	RELEASED FOR BID	DD	MP

REV.	DATE	DESCRIPTION

PROJECT NO. 5146
SHEET NO. P-201

Copyright © 2022 by DMR PLOT DATE: 11/4/2022 3:33:09 PM

PLUMBING SPECIFICATIONS

GENERAL:

1.1. EXISTING PIPING WHERE INDICATED FOR EXISTING SYSTEMS IS DIAGRAMMATIC ONLY.

1.2. BECOME THOROUGHLY FAMILIAR WITH ACTUAL BUILDING SYSTEMS, WHICH ARE TO BE CHANGED, ALTERED, OR TO WHICH NEW CONNECTIONS ARE TO BE MADE. VERIFY ALL EXISTING CONDITIONS INCLUDING PIPE SIZE, LOCATION, AND ELEVATION.

1.3. THE INTENT OF THE WORK IS INDICATED ON THE DRAWINGS AND DESCRIBED HEREINAFTER. NO CONSIDERATION WILL BE GRANTED FOR REASON OF LACK OF FAMILIARITY ON THE PART OF THE CONTRACTOR REGARDING ACTUAL PHYSICAL CONDITIONS AT THE SITE.

1.4. COORDINATE WORK WITH ALL TRADES AND EXISTING CONDITIONS OF THE JOB SITE AND MAINTAIN REQUIRED CEILING HEIGHTS AND SPACE CONDITIONS.

1.5. ALL EQUIPMENT SHALL BE ASBESTOS FREE AND INDICATED AS SUCH.

1.6. PROVIDE APPROVED BACKFLOW PREVENTION FOR CONNECTION TO NON - POTABLE FIXTURES AND EQUIPMENT AS REQUIRED BY CODE.

1.7. ALL PIPING AND EQUIPMENT SHALL BE SUBSTANTIALLY SUPPORTED FROM THE BUILDING STRUCTURE. HANGERS AND SUPPORTS SHALL BE SPECIFICALLY APPROVED FOR USE IN EACH APPLICATION. WHERE OVERHEAD CONDITIONS DOES NOT PERMIT THE FASTENING OF HANGER RODS IN REQUIRED LOCATIONS, PROVIDE ADDITIONAL STEEL FRAMING AS REQUIRED AND APPROVED. DO NOT USE EXPANSION SHIELDS.

1.8. NO PLUMBING WORK SHALL BE HUNG FROM DUCTWORK OR THE HANGERS OF OTHER TRADES.

1.9. DUE TO THE NATURE OF ALTERATION WORK WHICH REQUIRES THE BUILDING OR FACILITY TO BE KEPT OPERABLE AT ALL TIMES, IT SHALL BE THE RESPONSIBILITY OF THIS CONTRACTOR TO COORDINATE ALL ACTIVITIES, CONNECTIONS, SHUT DOWNS AND THE LIKE WITH THE GENERAL CONTRACTOR, TENANT, AND BUILDING OWNER. ANY INTERRUPTIONS OF BUILDING SERVICES INCLUDING PHYSICAL ACCESS TO ADJACENT SPACES MUST BE COORDINATED WITH THE BUILDING OWNER. ALL TEMPORARY CONNECTIONS OR AFTER-HOUR WORK SHALL BE SO ARRANGED WITH ALL PARTIES INVOL

1.10. DRAWINGS ARE DIAGRAMMATIC AND THEREFORE DO NOT RELIEVE THIS CONTRACTOR FROM PROVIDING ALL WORK AND EQUIPMENT NECESSARY TO COMPLETE THE INSTALLATION ACCORDING TO THE REQUIREMENTS.

1.11. THE ARRANGEMENT, POSITION, AND CONNECTION OF PIPES, DRAINS, VALVES, ETC., INDICATED ON THE DRAWINGS SHALL BE TAKEN AS A CLOSE APPROXIMATION, AND WHILE THEY SHALL BE FOLLOWED AS CLOSELY AS POSSIBLE, THE RIGHT IS RESERVED BY THE OWNER TO CHANGE THE LOCATIONS TO ACCOMMODATE ANY CONDITIONS WHICH MAY ARISE DURING THE PROGRESS OF THE WORK, WITHOUT ADDITIONAL COMPENSATION. TO THIS CONTRACTOR FOR SUCH CHANGES, PROVIDED THAT THE CHANGES ARE REQUESTED PRIOR TO THE INSTALLATION OF THIS CONTRACTOR'S WORK.

1.12. THE RESPONSIBILITY FOR ACCURATELY LAYING OUT THE WORK RESTS WITH THIS CONTRACTOR. SHOULD IT BE FOUND THAT ANY OF HIS WORK IS SO LAID OUT THAT INTERFERENCE WILL OCCUR, HE SHALL SO REPORT THAT TO THE GENERAL CONTRACTOR.

1.13. ALL MATERIALS AND FIXTURES USED FOR THE ENTIRE PLUMBING PROJECT SHALL BE NEW AND VOID OF ANY DEFECTS. ALL MATERIALS AND FIXTURES SHALL CARRY STANDARD MANUFACTURERS WARRANTY AGAINST ANY DEFECTS AND / OR DEFICIENCIES.

1.14. ALL COMPONENTS AND MATERIALS USE AS A PORTION OF THE DOMESTIC WATER SYSTEM ARE TO BE NSF 61 LISTED FOR USE IN POTABLE WATER SYSTEMS AND NSF-372 LISTED AS 'LEAD FREE'.

CODES, PERMITS, AND INSPECTIONS:

1.1. INSTALL ALL WORK IN FULL ACCORDANCE WITH THE REQUIREMENTS OF ALL LOCAL AND GOVERNMENTAL DEPARTMENTS HAVING JURISDICTION OVER THESE MATTERS, AS WELL AS WITH ANY REQUIREMENTS OF NFPA, UL, FM, ETC, AND OTHER APPLICABLE CODES.

1.2. SECURE AND PAY FOR ALL NECESSARY APPROVALS, PERMITS, INSPECTIONS, CARTING, LEGAL DUMPING, ETC., AND DELIVER THE OFFICIAL RECORDS OF THE GRANTING OF PERMITS TO THE ARCHITECT AND OWNER WITHOUT ANY ADDITIONAL COST TO THE OWNER.

1.3. PAY ALL FILING FEES TO OBTAIN RELEASE OF APPROVED PLANS.

1.4. PAY ROYALTIES OR FEES REQUIRED IN CONNECTION WITH THE USE OF PATENTED DEVICES OR SYSTEMS, AND SAVE THE OWNER, THE ARCHITECT, THE CONSULTING ENGINEER, AND THE TENANT HARMLESS FROM ANY CLAIMS OR LAWSUITS ARISING FROM SUCH USE, AND INDEMNIFY EACH THEREOF AGAINST ATTORNEYS' FEES IN CONNECTION THEREWITH.

I. WORK INCLUDED

A. ALL PLUMBING WORK SHALL BE INSTALLED IN STRICT CONFORMITY WITH THE NATIONAL STANDARD PLUMBING CODE AND ISC.

B. INCLUDE ALL LABOR, MATERIALS, APPLIANCES AND CONTRACTORS SERVICES REQUIRED FOR THE FURNISHING , INSTALLING AND TESTING, COMPLETE AND READY FOR OPERATION IN A MANNER SATISFACTORY TO THE ENGINEER NEW WATER, SANITARY, DRAINAGE, VENT AND ALL ASSOCIATED PIPING AND THE NECESSARY ANCILLARY WORK SHOWN ON THE DRAWINGS AND SPECIFIED HEREIN.

C. SCOPE OF WORK SHALL INCLUDE, BUT NOT NECESSARILY LIMITED TO, THE FOLLOWING

2. ALL REQUIRED SANITARY DRAINAGE AND VENT PIPING FROM FIXTURES AND DRAINS CONNECTING TO SYSTEM AS SHOWN ON DRAWING.

3. ALL HOT AND COLD WATER PIPING AND VALVES FOR NEW FIXTURES CONNECTING TO MAIN WATER LINE AS SHOWN ON DRAWING.

4. FILE FOR, OBTAIN AND PAY FOR ALL PERMITS, APPROVALS AND INSPECTIONS NECESSARY TO INSTALL ALL WORK OF THIS CONTRACT.

5. LOCATIONS ROUTES AND SIZES SHOWN ON DRAWINGS ARE APPROXIMATE AND FOR THE GUIDANCE OF THE PLUMBING CONTRACTOR. EXISTING CONDITIONS MUST BE VERIFIED ON THE FIELD. CONTRACTORS SHALL MAKE ALL REQUIRED ADDITIONS AND/ OR MODIFICATIONS NECESSARY TO SUIT ACTUAL FIELD CONDITIONS.

6. EXACT LOCATION OF FIXTURES SHALL BE AS INDICATED OR DIMENSIONED ON ARCHITECTURAL DRAWINGS.

7. PLUMBING CONTRACTOR SHALL CAREFULLY COORDINATE LOCATIONS OF ALL FIXTURES WITH OTHER TRADES IN CARRYING OUT HIS WORK.

E. WARRANTY:

4. ALL EQUIPMENT FURNISHED AND INSTALLED UNDER THIS CONTRACT SHALL BE COVERED BY A FULL ONE YEAR WARRANTY. THE WARRANTY SHALL COMMENCE ON THE DATE OF THE OWNER'S FINAL ACCEPTANCE.

ENGINEER'S REVIEW, SHOP DRAWINGS, AND CERTIFICATIONS:

4.1. PREPARE AND SUBMIT DETAILED SHOP DRAWINGS. THE ENGINEER WILL REVIEW SHOP DRAWINGS AND SAMPLES FOR CONFORMANCE WITH THE DESIGN CONCEPT OF THE PROJECT AND THE INFORMATION CONTAINED IN THE CONTRACT DOCUMENTS. THE ENGINEER'S REVIEW OF SHOP DRAWINGS AND SAMPLES IS ONLY FOR THE CONVENIENCE OF THE OWNER IN FOLLOWING THE WORK AND DOES NOT RELIEVE THIS TRADE OF RESPONSIBILITY FOR DEVIATIONS FROM THE REQUIREMENTS OF THE CONTRACT DOCUMENTS. THE ENGINEER'S REVIEW SHALL NOT BE CONSTRUED AS A COMPLETE OR DETAILED CHECK OF THE WORK SUBMITTED, NOR SHALL IT RELIEVE THIS TRADE OF RESPONSIBILITY FOR ERRORS OF ANY SORT IN THE SHOP DRAWINGS AND SAMPLES, OR FROM THE NECESSITY OF FURNISHING ANY WORK REQUIRED BY THE CONTRACT DOCUMENTS WHICH HAVE BEEN OMITTED FROM THE SHOP DRAWING SUBMITTALS.

4.2. NO PART OF THE WORK SHALL BE STARTED IN THE SHOP OR IN THE FIELD UNTIL THE ENGINEER HAS REVIEWED THE SHOP DRAWINGS AND SAMPLES FOR THAT PORTION OF THE WORK. THEREAFTER, THE WORK SHALL BE EXECUTED IN ACCORDANCE WITH THE CONTRACT DOCUMENTS AND THE INDICATED STATUS OF THE REVIEWED SHOP DRAWINGS. PRIOR TO ASSEMBLING THE WORK, THE FOLLOWING SHALL BE SUBMITTED: SCALED FLOOR PLAN AND CEILING DRAWINGS WITH DIMENSIONED LOCATIONS OF ALL PIPING AND EQUIPMENT INCLUDING SIZES, ELEVATIONS, AND APPROPRIATE INDICATION OF COORDINATION BETWEEN STRUCTURAL AND MECHANICAL ELEMENTS. MANUFACTURER'S CATALOGUE CUTS OF ALL EQUIPMENT TO BE USED. SAMPLES OF ALL DEVICES, WHICH WILL BE CLEARLY VISIBLE TO VIEW. ALL SUBMITTALS SHALL BE PROPERLY IDENTIFIED WITH PROJECT NAME, ARCHITECT, ENGINEER, AND SUBCONTRACTOR'S NAME, ADDRESS, AND TELEPHONE NUMBER. PROVIDE CLEAR DETAILED REPRODUCIBLE "AS-BUILT" DRAWINGS UPON COMPLETION OF WORK AND PROVIDE SETS OF THE SAME TO LANDLORD AS DIRECTED.

4.3. THE ARCHITECT AND/OR ENGINEER WILL REVIEW SHOP DRAWINGS AND SAMPLES WITH REASONABLE PROMPTNESS AND WILL RETURN THEM TO THE CONTRACTOR STAMPED TO INDICATE THE APPROPRIATE ACTION AS FOLLOWS:

4.3.1. "NO EXCEPTIONS TAKEN" MEANS THAT FABRICATION, MANUFACTURE OR CONSTRUCTION MAY PROCEED PROVIDING THE SUBMITTAL COMPLIES WITH THE CONTRACT DOCUMENTS.

4.3.2. "MAKE CORRECTIONS NOTED" MEANS THAT FABRICATION, MANUFACTURE OR CONSTRUCTION MAY PROCEED PROVIDING THE SUBMITTAL COMPLIES WITH THE ARCHITECT'S AND/OR ENGINEER'S NOTATIONS AND/OR THE CONTRACT DOCUMENTS. A COPY OF THE CORRECTED SUBMITTAL SHALL BE RETURNED TO THE ARCHITECT AND/OR ENGINEER FOR RECORD. IF, FOR ANY REASON, THE CONTRACTOR CANNOT COMPLY WITH THE NOTATIONS, THE CONTRACTOR SHALL RESUBMIT AS DESCRIBED FOR SUBMITTALS STAMPED "REVISE AND RESUBMIT".

4.3.3. "REVISE AND RESUBMIT" MEANS THAT THE CONTRACTOR MUST COMPLY WITH THE ARCHITECT'S AND/OR ENGINEER'S NOTATIONS AND RESUBMIT BEFORE FABRICATION, MANUFACTURE OR CONSTRUCTION MAY PROCEED. SUBMITTALS STAMPED IN THIS MANNER ARE NOT PERMITTED ON THE JOB SITE.

4.3.4. "REJECTED" MEANS THAT THE SUBMITTAL DOES NOT COMPLY WITH THE CONTRACT DOCUMENTS AND THAT FABRICATION, MANUFACTURER CONSTRUCTION SHALL NOT PROCEED. SUBMITTALS STAMPED IN THIS MANNER ARE NOT PERMITTED ON THE JOB SITE.

II. PIPING, SUPPORTS AND ACCESSORIES

A. ALL ABOVE GROUND DRAINAGE PIPE, VENT PIPE AND FITTINGS SHALL BE STANDARD WEIGHT NO HUB CAST IRON SOIL PIPE AND FITTINGS WITH COMPRESSION COUPLING JOINTS SIMILAR TO "HUSKY", OR SCHEDULE 40 PVC AND FITTINGS AS PER MATERIAL SCHEDULE ON P-001.

B. ALL WATER PIPING SHALL BE COPPER TYPE "L" HARD TEMPER CONFORMING TO ASTM B-88. FITTINGS SHALL BE WROUGHT COPPER CONFORMING TO ASTM B-16.22. JOINTS SHALL BE SOLDERED WITH 95-5 TIN ANTIMONY OR OTHER APPROVED LEAD FREE SOLDER FILLER MATERIAL AND FLUX.

C. EXISTING PIPING SHALL BE FLUSHED AND DISINFECTED AS PER REFERENCED CODES IN P-001 .

D. PVC PIPE AND FITTINGS SHALL BE MANUFACTURED FROM PVC COMPOUND WITH A CELL CLASS OF 12454 PER ASTM D 1784 AND CONFORM WITH NATIONAL SANITATION FOUNDATION (NSF) STANDARD 14. PIPE SHALL BE IRON PIPE SIZE (IPS) CONFORMING TO ASTM D 1785 AND ASTM D 2665. FITTINGS SHALL CONFORM TO ASTM D 2665. ALL PIPE AND FITTINGS TO BE PRODUCED BY A SINGLE MANUFACTURER AND TO BE INSTALLED IN ACCORDANCE WITH MANUFACTURERS RECOMMENDATIONS AND LOCAL CODE REQUIREMENTS. SOLVENT CEMENTS SHALL CONFORM TO ASTM D 2564, PRIMER SHALL CONFORM TO ASTM F 656. THE SYSTEM IS INTENDED FOR NON-PRESSURE DRAINAGE APPLICATIONS WHERE THE TEMPERATURE WILL NOT EXCEED 140° F. ANY PENETRATIONS OF FIRE RESISTANCE RATED WALLS AND HORIZONTAL ASSEMBLIES SHALL BE PROTECTED WITH A FIRE COLLAR TESTED IN ACCORDANCE WITH ASTM E 814 OR UL 1479.

E. HUBLESS CAST IRON PIPE AND FITTINGS SHALL BE MANUFACTURED FROM GRAY CAST IRON AND SHALL CONFORM TO ASTM A-888 AND CISPI STANDARD 301. ALL PIPE AND FITTINGS SHALL BE MARKED WITH THE COLLECTIVE TRADEMARK OF THE CAST IRON SOIL PIPE INSTITUTE . HUBLESS COUPLINGS SHALL CONFORM TO CISPI STANDARD 310 FOR STANDARD COUPLINGS OR ASTM C-1540 FOR HEAVY DUTY COUPLINGS WHERE INDICATED. GASKETS SHALL CONFORM TO ASTM C-564. ALL PIPE AND FITTINGS TO BE PRODUCED BY A SINGLE MANUFACTURER AND ARE TO BE INSTALLED IN ACCORDANCE WITH MANUFACTURER'S RECOMMENDATIONS AND LOCAL CODE REQUIREMENTS. COUPLINGS SHALL BE INSTALLED IN ACCORDANCE WITH THE MANUFACTURER'S BAND TIGHTENING SEQUENCE AND TORQUE. TIGHTEN BANDS WITH A PROPERLY CALIBRATED TORQUE LIMITING DEVICE. TEST THE SYSTEM HYDROSTATICALLY AFTER INSTALLATION TO 10 FT. OF HEAD (4.3 PSI MAXIMUM).

F. COPPER WATER PIPING SHALL BE SEAMLESS DRAWN OR EXTRUDED TYPE "L" COPPER TUBING, HARD TEMPER IN ACCORDANCE WITH ASTM B-88. FITTINGS SHALL BE WROUGHT OR CAST BRASS SOLDERED FITTINGS CONFORMING WITH ASME B16.18 OR ASME B16.22. SOLDER JOINTS SHALL BE MADE IN ACCORDANCE WITH ASTM B 828 USING ASTM B-32 LEAD FREE SOLDER AND ASTM B-813 FLUX.

G. COPPER INDIRECT WASTE PIPING SHALL BE SEAMLESS DRAWN COPPER TUBING, MANUFACTURED IN ACCORDANCE WITH ASTM B-306. FITTINGS SHALL BE WROUGHT OR CAST BRASS SOLDERED FITTINGS CONFORMING WITH ASME B16.23 OR ASME B16.29. SOLDER JOINTS SHALL BE MADE IN ACCORDANCE WITH ASTM B 828 USING ASTM B-32 LEAD FREE SOLDER AND ASTM B-813 FLUX.

H. CROSS-LINKED POLYETHYLENE TUBING SHALL MEET THE SDR-9 DIMENSION STANDARD AND PERFORMANCE SPECIFICATIONS OF ASTM F-876/F-877 AND CSA B137.5 AND BE APPROVED FOR USE WITH ASTM F1807 AND ASTM F1960 FITTING SYSTEMS. TUBING SYSTEM SHALL ALSO COMPLY WITH ANSI/NSF 14 AND 61 AS SUITABLE FOR USE WITH POTABLE WATER. TEMPERATURE AND PRESSURE RATINGS SHALL BE 160 PSI AT 73.4° F, 100 PSI AT 180° F, AND 80 PSI AT 200° F. ANY PENETRATIONS OF FIRE RESISTANCE RATED WALLS AND HORIZONTAL ASSEMBLIES SHALL BE PROTECTED WITH A FIRE COLLAR TESTED IN ACCORDANCE WITH ASTM E 814 OR UL 1479.

I. BLACK IRON PIPE SHALL BE SCHEDULE 40 WELDED PIPE CONFORMING TO ASTM A-53 OR SEAMLESS DRAWN PIPE CONFORMING TO ASTM A-53 AND A-106. PIPE SHALL BE INSTALL WITH TAPERED THREADED OR WELDED JOINTS. A SOFT SETTING THREAD SEALANT SHALL BE USED ON ALL THREADED JOINTS. FITTINGS SHALL BE BLACK MALLEABLE IRON FITTINGS.

J. CORRUGATED STAINLESS STEEL TUBING SHALL BE MANUFACTURED TO COMPLY WITH ANSI LC 1-97 WITH ALL ADDENDA AND BE LISTED BY CSA. TUBING SHALL BE MANUFACTURED FROM 300 SERIES STAINLESS STEEL STRIP CONFORMING TO ASTM A240. TUBING SHALL HAVE A UV RESISTANT, FIRE RATED POLYETHYLENE JACKET DESIGNED TO COMPLY WITH ASTM E-84 FOR FLAME SPREAD AND SMOKE DEVELOPMENT. TUBING SHALL BE RATED FOR OPERATION UP TO 5 PSI. FITTINGS SHALL BE BRASS FLARE FITTING AS LISTED BY CSA.

K. PROVIDE APPROVED TYPE VACUUM BREAKERS AND/OR CHECK VALVES, OR BACKFLOW PREVENTORS AS HEREIN SPECIFIED ON ALL EQUIPMENT AND FIXTURE CONNECTIONS REQUIRED BY CODE, INDICATED ON THE DRAWINGS, AS SPECIFIED, OR AS REQUIRED FOR THE PROPER FUNCTIONING OF THE EQUIPMENT.

L. ALL PIPING EXPOSED TO VIEW SHALL BE CHROME PLATED. THE TERM EXPOSED TO VIEW SHALL APPLY TO ALL PIPING FROM THE POINT WHERE IT LEAVES THE WALL, CEILING, OR FLOOR CONSTRUCTION, TO THE POINT OF FINAL CONNECTION TO THE FIXTURE. PIPING BUILT INTO FIXED BENCHWORK WITH ACCESS DOORS OR PANELS SHALL NOT BE CONSIDERED "EXPOSED TO VIEW."

G. PIPING SUPPORT:

5. PIPING SHALL BE HUNG FROM CONCRETE SLAB DIRECTLY ABOVE. PROVIDE SUITABLE VIBRATION ISOLATION HANGERS AND CLAMPS TO SUPPORT THE PIPES. MANUFACTURERS INSTALLATION INSTRUCTIONS SHALL BE STRICTLY ADHERED TO. FOR LIGHTWEIGHT PIPING AND WHERE APPROVED BY ENGINEER, ATTACH THE ROD AND HANGER TO A 2 1-INCH X 2-INCH ANGLE FASTENED TO THE JOIST BASE BY TWO STAR NO 7000 DOUBLE EXPANSION SHIELDS NO SMALLER THAN ¼-INCH SIZE. THE RODS ON HANGER SHALL BE OF ADEQUATE SIZE TO SUPPORT THE LOADS WHICH THEY CARRY.

E. FITTINGS

1. COPPER PRESSURE FITTINGS: ASME B16.18, CAST-COPPER ALLOY OR ASME B 16.22, WROUGHT-COPPER, SOLDER-JOINT FITTINGS. FURNISH WROUGHT COPPER FITTINGS IF INDICATED.

2. BRONZE FLANGES: ASME B1.24, CLASS 150, WITH SOLDER-JOINT END.

3. FLEXIBLE CONNECTORS: STAINLESS-STEEL BELLOWS WITH WOVEN, FLEXIBLE, BRONZE WIRE REINFORCED PROTECTIVE JACKET; MINIMUM 150 PSIG WORKING PRESSURE, MAXIMUM 250 DEG F OPERATING TEMPERATURE. CONNECTORS SHALL HAVE FLANGED OR THREADED-END CONNECTIONS TO MATCH EQUIPMENT CONNECTED AND SHALL BE CAPABLE OF 3/4-INCH VISAULNAMENT.

4. COPPER UNIONS: MSS SP-123, CAST-COPPER-ALLOY, HEXAGONAL-STOCK BODY, WITH BALL-AND-SOCKET, METAL-TO-METAL SEATING SURFACES AND SOLDER-JOINT OR THREADED ENDS.

F. JOINTING MATERIALS

1. SOLDER FILLER METAL: ASTM B 32, 95-5 TIN-ANTIMONY.

G. VALVES

1. ALL WATER VALVES SHALL BE TWO PIECE, FULL PORT BALL VALVES WITH THREADED CONNECTIONS. APOLLO AS STANDARD. NOTE: SOLDERED OR BRAISED CONNECTIONS WILL NOT BE ACCEPTED.

2. GAS VALVES SHALL BE LOCKABLE PLUG VALVE-WALLWORTH NO.2911 OR AS APPROVED.

3. THERMOSTATIC MIXING VALVES SHALL BE INSTALLED TO PROVIDE TEMPERED WATER (MAX. TEMP. 110° F) TO PUBLIC USE HAND WASHING FACILITIES AND SHALL BE LISTED IN ACCORDANCE WITH ASSE 1070.

4. ALL CHECK VALVES ARE TO BE ASSE 1024 DUAL CHECK VALVES UNLESS OTHERWISE NOTED.

5. PRESSURE VACUUM BREAKERS SHALL BE INSTALLED 12" ABOVE THE HIGHEST OUTLET THEY ARE PROTECTING. THE VACUUM BREAKER SHALL RENDER POSITIVE PROTECTION AGAINST BACK-SIPHONAGE AND INCORPORATE A CHECK VALVE AND INLET SHUT-OFF.

6. VACUUM BREAKERS SHALL BE RATED TO 150 PSI WORKING PRESSURE AND SHALL WITHSTAND TEMPERATURES TO 170 F. THE VACUUM RELIEF VALVE MUST BE OF BRASS CONSTRUCTION WITH A SPRING LOADED DIAPHRAGM MEMBER TO ASSURE POSITIVE OPENING OF AIR INLET WHEN BACK-SIPHONAGE OCCURS. PRESSURE VACUUM BREAKERS SHALL BE WATTS # 800 OR AS APPROVED.

H. DRAIN VALVES

1. HOSE-END DRAIN VALVES: MSS SP-110, NPS 3/4 DN 20 BALL VALVE, RATED FOR 400-PSIG (2760-KPA) MINIMUM CWP. INCLUDE TWO-PIECE, COPPER-ALLOY BODY WITH STANDARD PORT, CHROME-PLATED BRASS BALL, REPLACEABLE SEATS AND SEALS, BLOWOUT-PROOF STEM, AND VINYL-COVERED STEEL HANDLE.

a. INLET: THREADED OR SOLDER JOINT.
b. OUTLET: SHORT-THREADED NIPPLE WITH ASME B1.20.1, GARDEN-HOSE THREADS AND CAP.

2. HOSE-END DRAIN VALVE: MSS SP-80, GATE VALVE, CLASS 125, ASTM B 62 BRONZE BODY, WITH NPS 3/4 (DN 20) THREADED OR SOLDER JOINT INLET AND ASME B1.20.7, GARDEN-HOSE THREADS ON OUTLET AND CAP. HOSE BIBB ARE PROHIBITED FOR THIS APPLICATION.

3. STOP-AND-WASTE DRAIN VALVES: MSS SP-110, BALL VALVE, RATED FOR 200-PSIG (1380-KPA) MINIMUM CWP OR MSS SP-80, CLASS 125, GATE VALVE, ASTM B 62 BRONZE BODY, WITH NPS 1/8 (DN 6) SIDE DRAIN OUTLET AND CAP.

I. SLEEVE PENETRATION SYSTEMS

1. MANUFACTURERS:
a. PROSET SYSTEMS, INC.

2. DESCRIPTION: UL 1479, THROUGH-PENETRATION FIRE STOP ASSEMBLY CONSISTING OF SLEEVE AND STACK FITTING WITH FIRE STOPPING PLUG.
a. SLEEVE: MOD.SD PVC PLASTIC, OF LENGTH TO MATCH SLAB THICKNESS AND WITH INTEGRAL NAILING FLANGE ON ONE END FOR INSTALLATION IN CAST-IN-PLACE CONCRETE SLABS.

3. APPROVED MANUFACTURERS:
a. PROSET SYSTEMS, INC.

4. PROVIDE 18 GAUGE GALVANIZED SHEET METAL SLEEVES FOR ALL PIPES PASSING THROUGH WALLS OR FLOORS. PROVIDE SLEEVES WITH AN I.D. OF AT LEAST 1/2" GREATER THAN THE OUTSIDE OF THE PIPE, INCLUDING INSULATION WHICH MUST BE CONTINUOUS THROUGH THE SLEEVE. PACK SPACE BETWEEN PIPES AND SLEEVES WITH AN APPROVED FIRESTOP MATERIAL. WHERE SLEEVES PASS THROUGH RATED CONSTRUCTION, FIT ESCUTCHEONS ON BOTH SIDES OF CONSTRUCTION.

J. CLEANOUTS

1. CLEANOUTS: COMPLY WITH ASME A112.36.2M-ASME A112.3.1.

a. APPLICATION: FLOOR CLEANOUT AND WALL CLEANOUT FOR INSTALLATION IN EXPOSED PIPING.
b. AVAILABLE PRODUCTS:
c. PRODUCTS:

i. SMITH, JAY R. MFG. CO.
ii. JOSAM CO.
iii. INDUSTRIES, INC., SPECIFICATION DRAINAGE OPERATION.

d. BODY OR FERRULE MATERIAL: CAST IRON.
e. CLAMPING DEVICE: REQUIRED.
f. OUTLET CONNECTION: THREADED.
g. CLOSURE: BRASS PLUG WITH STRAIGHT THREADS AND GASKET.
h. ADJUSTABLE HOUSING MATERIAL: CAST IRON WITH THREADS AND SETSCREWS.
i. FRAME AND COVER MATERIAL AND FINISH: NICKEL-BRONZE, COPPER ALLOY.
j. FRAME AND COVER SHAPE: SQUARE.
k. TOP LOADING CLASSIFICATION: MEDIUM DUTY.

K. INSULATING MATERIALS

1. ALL INSULATION SHALL HAVE A COMPOSITE (INSULATION, JACKET FACING AND ADHESIVE USED TO ADHERE JACKET OR FACING TO THE INSULATION) FIRE AND SMOKE HAZARD RATINGS AS TESTED BY PROCEDURE ASTM E-84, NFPA 255 AND UL 73, NOT EXCEEDING FLAME SPREAD OF 25, FUEL CONTRIBUTED OF 50, AND SMOKE DEVELOPED OF 50. ACCESSORIES SUCH AS ADHESIVES, MASTICS, CEMENTS, TAPES AND CLOTHS FOR FITTINGS SHALL HAVE COMPONENT RATINGS AS LISTED ABOVE. INSULATION SHALL BE GLASS FIBER WITH A MAXIMUM K FACTOR 0.23 AT 75DF. MEAN TEMPERATURE. DENSITY SHALL NOT BE NOT LESS THAN 3 LBS. PER CU. FT.

2. THE MATERIALS AS SPECIFIED BELOW HAVE BEEN SELECTED FROM THE CATALOG OF OWENS-CORNING FIBERGLASS CORP. AND ARE REPRESENTATIVE OF THE QUALITY, DESIGN AND FINISH DESIRED. INSULATION AS MANUFACTURED BY OTHER MANUFACTURERS MAY BE SUBMITTED FOR APPROVAL, PROVIDED THE PRODUCTS MEET FULLY IN ALL RESPECTS (SUCH AS DENSITY, MOISTURE ABSORPTION, ALKALINITY, THERMAL, CONDUCTIVITY, JACKET, ETC.) THE MATERIALS AS DESIGNATED BELOW.

3. FIBERGLASS PIPE INSULATION: FS HH-I-558B, FORM D, TYPE IL CLASS 12.

4. FIBERGLASS PIPE FITTING INSULATION: FS HHI-558, FORM E, CLASS12.

5. FITTING AND VALVES: ZESTON 25/50 RATED -20 MIL P.V.C. COVERS OVER FIBERGLASS INSULATION.

6. RELATED MATERIALS AND REQUIREMENTS

a. AT PIPE SUPPORTS INSUL-SHIELD PIPE SADDLES AND MATCHING HANGER SHALL BE USED. JOINTS OF INSULATION ABUTTING INSUL-SHIELDING PIPE SADDLES SHALL BE BUTTED WITH IC-405, AND THE JOINTS FIRMLY PRESSED TOGETHER.

b. ALL CONCEALED AND EXPOSED PIPING SHALL BE PROVIDED WITH FACTORY ASJ (OWENS/CORNING FIBERGLASS) SECURED IN PLACE WITH VAPOR BARRIER ADHESIVE IC-225. PROVIDE 1/2" ALUMINUM BANDS SPACED 18" ON CENTERS.

7. INSULATION REQUIREMENTS

a. ON COLD WATER PIPING, PROVIDE ½" FIBERGLAS INSULATION WITH FACTORY APPLIED SELFSEALING VAPOR BARRIER JACKETS. THE FIRST 8' OF NON-CIRCULATED HOT WATER SYSTEMS AND ALL PORTIONS OF RECIRCULATED HOT WATER SYSTEMS (140° F. OR LESS) SHALL BE INSULATION SHALL BE 1" THICK FOR PIPING UP TO 1½", AND 1½" THICK FOR LARGER PIPING. FOR COLD WATER SERVICE, ALL VAPOR BARRIERS SHALL BE SEALED AND CONTINUOUS. INSULATION CONDUCTIVITY NOT TO EXCEED 0.27 BTU PER INCH/HOUR/FT²X° F.

b. ALL INSULATION AND VAPOR BARRIERS SHALL BE SEALED AND CONTINUOUS THROUGH HANGERS, SLEEVES, FITTINGS, VALVES, ETC.

c. ALL EXPOSED SUPPLY AND WASTE PIPING UNDER PUBLIC LAVATORIES AND SINKS SHALL BE INSULATED TO PROTECT AGAINST CONTACT IN ACCORDANCE WITH ANSI A117.1 SECTION 606.6.

VII. PIPING SUPPORT

1. SANITARY, VENT, HW, & CW PIPING

VERTICAL PIPING OF THE FOLLOWING MATERIALS SHALL BE SUPPORTED ACCORDING TO MANUFACTURER'S RECOMMENDATIONS, BUT AT NO GREATER THAN THE DISTANCES LISTED BELOW:

1. CAST-IRON SOIL PIPE - AT BASE AND AT EACH STORY HEIGHT.
2. STEEL THREADED PIPE - AT BASE AND AT EACH STORY HEIGHT.
3. COPPER TUBE - AT EACH STORY HEIGHT BUT NOT MORE THAN 10-FOOT INTERVALS.
4. PLASTIC PIPE - REFER TO SECTION 8.7 IN NSPC 2009.
5. FLEXIBLE PLASTIC TUBING - EACH STORY HEIGHT AND AT MID-STORY.

HORIZONTAL PIPING OF THE FOLLOWING MATERIALS SHALL BE SUPPORTED ACCORDING TO MANUFACTURER'S RECOMMENDATIONS, BUT AT NO GREATER THAN THE DISTANCES LISTED BELOW:

1. CAST-IRON SOIL PIPE - MINIMUM OF ONE HANGER PER PIPE LENGTH LOCATED WITHIN 18 INCHES OF EACH JOINT (UP TO 10-FOOT MAXIMUM PIPE LENGTH. AT CHANGES IN DIRECTION, AND AT BRANCH CONNECTIONS. WHERE PIPE IS SUSPENDED BY NO-RIGID HANGERS MORE THAN 18 INCHES LONG, PROVIDE LATERAL SUPPORT AT 25-FOOT MAXIMUM SPACING. LATERAL SUPPORT SHALL CONSIST OF EITHER 1) A SWAY BRACE OR 2) EITHER A CHANGE IN DIRECTION OR A BRANCH CONNECTION THAT PROVIDES THE REQUIRED LATERAL SUPPORT.
2. STEEL THREADED PIPE 3/4-INCH SIZE AND SMALLER - 10-FOOT INTERVALS.
3. STEEL THREADED PIPE ONE-INCH SIZE AND LARGER - 12 FOOT INTERVALS.
4. COPPER TUBE 1-1/4-INCH SIZE AND SMALLER- 6 FOOT INTERVALS.
4. COPPER TUBE 1-1/2-INCH SIZE AND LARGER- 10 FOOT INTERVALS.
5. PLASTIC PIPE - REFER TO SECTION 8.7 IN NSPC 2009.
6. FLEXIBLE PLASTIC TUBING - 32 INCHES

CLEANING:

A. PRIOR TO UTILIZATION THE POTABLE WATER SYSTEM SHALL BE FLUSHED WITH CLEAN WATER UNTIL WATER RUNS CLEAR AND FREE OF DEBRIS OR PARTICLES. FLUSHING SHALL BE PREFORMED WITH ANY STRAINERS OR AERATORS REMOVED.

B. AFTER FLUSHING, THE POTABLE WATER SYSTEM SHALL BE DISINFECTED BY FILLING THE SYSTEM WITH A WATER/ CHLORINE SOLUTION CONTAINING AT LEAST 50 PARTS PER MILLION OF CHLORINE. THE SOLUTION SHALL BE ALLOUD TO STAND FOR AT LEAST 24 HOURS. ALTERNATELY A WATER/ CHLORINE SOLUTION CONTAINING AT LEAST 200 PARTS PER MILLION CAN BE USED FOR A DURATION OF AT LEAST 3 HOURS BUT NO MORE THAN 6 HOURS.

C. AFTER DISINFECTION THE SYSTEM SHALL BE FLUSHED WITH POTABLE WATER UNTIL THE CHLORINE LEVELS AT ALL OUTLETS ARE EQUAL TO THAT OF THE INCOMING WATER SUPPLY.

D. A CERTIFICATION OF PERFORMANCE AND LABORATORY TEST REPORT SHOWING THE ABSENCE OF COLIFORM ORGANISMS IN THE POTABLE WATER SYSTEM SHALL BE SUBMITTED TO THE AUTHORITY HAVING JURISDICTION.

TESTS:

E. PRIOR TO SUBMITTING AN APPLICATION FOR FINAL ACCEPTANCE OF THE WORK, ALL TESTS DEEMED NECESSARY TO SHOW PROPER EXECUTION OF THE WORK SHALL HAVE BEEN PERFORMED AND COMPLETED IN THE PRESENCE OF AN ARCHITECT'S / OWNER'S REPRESENTATIVE. SCHEDULING OF ALL TESTING PROCEDURES SHALL BE ARRANGED TO SUIT THE CONVENIENCE OF THE ARCHITECT AND/OR OWNER'S REPRESENTATIVE.

F. SUBJECT THE DRAINS, WASTE AND VENT PIPING TO A WATER TEST IN ACCORDANCE WITH ALL LOCAL REQUIREMENTS. THE SYSTEM SHALL BE TESTED TO A HYDROSTATIC PRESSURE EQUIVALENT TO AT LEAST A TEN FOOT OF HEAD OF WATER. AFTER FILLING, D

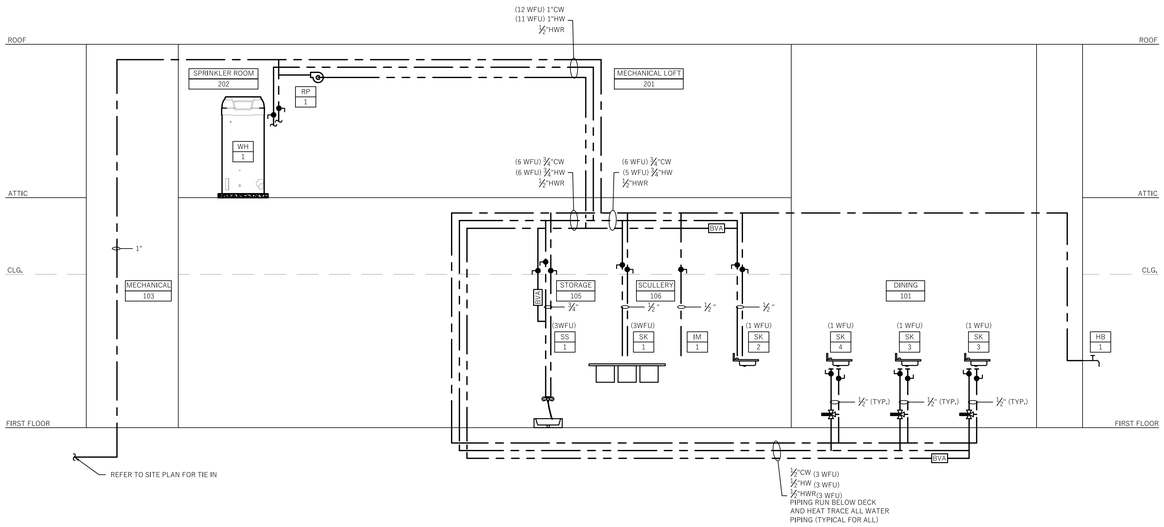

1 HOT & COLD WATER RISER DIAGRAM
SCALE: N.T.S.

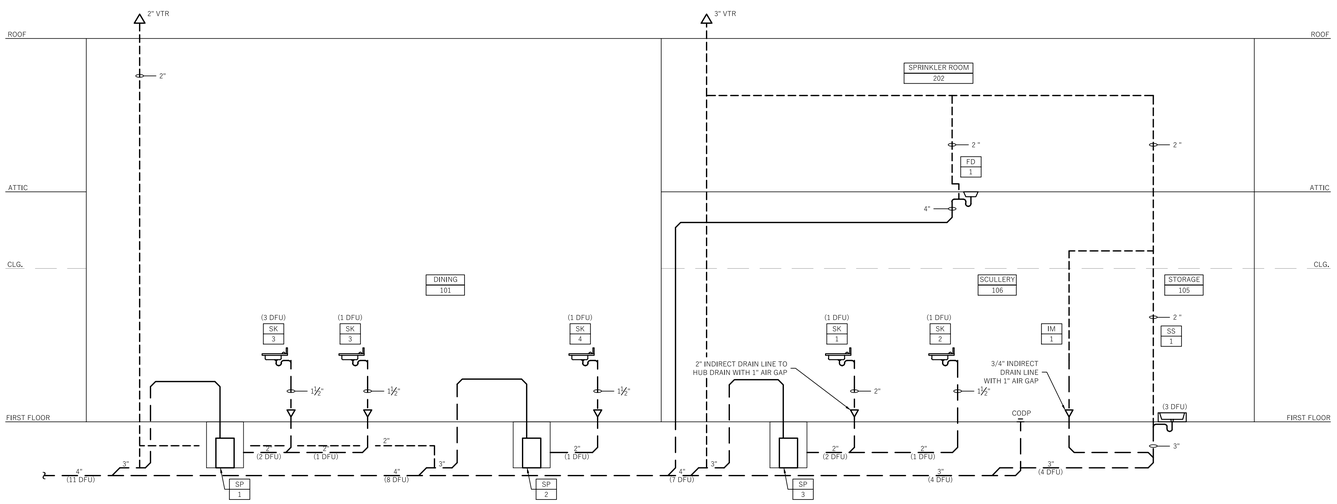

2 SANITARY & VENT RISER DIAGRAM
SCALE: N.T.S.

Key Plan

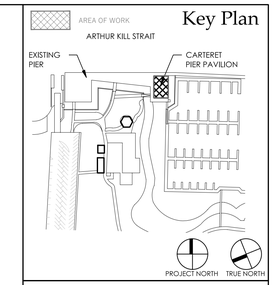

PROJECT
CARTERET PIER PAVILION

WATERFRONT PARK
200 MIDDLESEX AVENUE BLOCK 201 LOT 4
CARTERET, NEW JERSEY 07008

GEOTECHNICAL & STRUCTURAL ENGINEER

McLaren Technical Services, Inc.
Woodcliff Lake, New Jersey 07677
201.775.6000 | www.mgmclaren.com

MEP ENGINEER

KeRi ENGINEERING PC
911 Springfield Rd, Suite 2
Union, NJ 07083
T : 973.866.KeRi (5374)
F : 973.866.5370
W : keriengineering.com

CIVIL ENGINEER

1460 RT. 9 SOUTH
HOWELL, NEW JERSEY 07731
INFO@CMEUSA1.COM
732.462.7400

KITCHEN DESIGN CONSULTANT

44 ST. JOHN STREET
GOSHEN, NEW YORK
845.360.5112
INFO@RRADESIGNS.COM

DMR
ARCHITECTURE
PLANNING
ENGINEERING
INTERIORS
CONSULTING
www.dmrarchitects.com

MEMBERS OF THE AMERICAN INSTITUTE OF ARCHITECTS

LLOYD A. ROSENBERG	NJ - AI 05526
KURT A. VIERHBLIG	NJ - AI 17809
PRADEEP KAPOOR	NY - 042197
FERNANDO ROBLEDO	NY - 033804
JANET PINI	NJ - AI 02102900

NOT VALID FOR BIDDING UNLESS SIGNED AND SEALED BY ARCHITECT

777 Terrace Avenue, 6th Floor
Hasbrouck Heights, New Jersey 07604
Tel 201 - 288 - 2600 || Fax 201 - 288 - 2662

NCARB NATIONAL COUNCIL OF ARCHITECTURAL REGISTRATION BOARDS

CO - 306 184 CT - 05438 *NJ - AI 05526*
NJ-BOARD OF PROFESSIONAL PLANNERS) - LI 01584
NY - 013025-1 *PA - RA - 13437-B*

DWG TITLE :

PLUMBING RISERS

SCALE As indicated

DATE	DESCRIPTION	DRN	CHK
06/26/2023	RELEASED FOR BID	DD	MP

REV.	DATE	DESCRIPTION

PROJECT NO.	SHEET NO.
5146	P-401

Copyright © 2022 by DMR PLOT DATE: 11/4/2022 3:33:09 P.M.

ABBREVIATIONS

AFF	ABOVE FINISHED FLOOR
AD	ACCESS DOOR
AC	AIR CONDITIONING UNIT
ACCU	AIR COOLED CONDENSING UNIT
AFS	AIR FLOW SENSOR
AHU	AIR HANDLING UNIT
AM	AIR MEASURING DEVICE
APPROX	APPROXIMATE
AAV	AUTOMATIC AIR VENT
ATC	AUTOMATIC TEMPERATURE CONTROL
BDD	BACK DRAFT DAMPER
BT	BOTTOM REGISTER
BHP	BRAKE HORSE POWER
BTU	BRITISH THERMAL UNIT
BTUH	BRITISH THERMAL UNIT PER HOUR
BLDG	BUILDING
CH	CEILING HEATER
CAP	CAPACITY
CLG	CEILING
CD	CEILING DIFFUSER
CG	CEILING GRILLE
CR	CEILING REGISTER
℄	CENTER LINE
CO	CLEAN OUT
COL	COLUMN
COND	CONDENSATE
CU	CONDENSING UNIT
CONN	CONNECTION
CAV	CONSTANT AIR VOLUME
CV	CONSTANT VOLUME
CONT	CONTINUATION
CONTR	CONTRACTOR
CV	CONTROL VALVE
CC	COOLING COIL
CFM	CUBIC FEET PER MINUTE
° F	DEGREES FAHRENHEIT
DC	DUST COLLECTOR
DIAGM	DIAGRAM
DIA	DIAMETER
DIFF	DIFFUSER
DX	DIRECT EXPANSION
DISCH	DISCHARGE
DN	DOWN
DT	DRIP AND TRAP
DB	DRY BULB
EDH	ELECTRIC DUCT HEATER
EH	ELECTRIC HEATER
ELEV	ELEVATION
ENT	ENTERING
EAT	ENTERING AIR TEMPERATURE
EDB	ENTERING DRY BULD TEMPERATURE
EWT	ENTERING WATER TEMPERATURE
EQUIP	EQUIPMENT
EXH	EXHAUST
EA	EXHAUST AIR
EF	EXHAUST FAN
ER	EXHAUST REGISTER
E	EXISTING
EXIST	EXISTING
ETR	EXISTING TO REMAIN
EXT	EXTERNAL
ESP	EXTERNAL STATIC PRESSURE
EWH	ELECTRIC WALL HEATER
FV	FACE VELOCITY
FCU	FAN COIL UNIT
FT	FEET
FPM	FEET PER MINUTE
FPS	FEET PER SECOND
F	FILTER
FIN	FINISHED FLOOR
FPI	FINS PER INCH
FD	FIRE DAMPER
FLEX	FLEXIBLE
FC	FLEXIBLE CONNECTION
FD	FLOOR DRAIN
FM	FLOW METER
FLA	FULL LOAD AMPS
FH	FUME HOOD
GAL	GALLON
GPM	GALLONS PER MINUTE
GALV	GALVANIZED
GA	GAUGE
GC	GENERAL CONTRACTOR
HD	HEAD
HE	HEAT EXCHANGER
HP	HEAT PUMP
HC	HEATING COIL
HZ	HERTZ
HP	HORSE POWER
HWR	HOT WATER RETURN
HWS	HOT WATER SUPPLY

NOTE:

ALL ABBREVIATIONS AND SYMBOLS MAY NOT APPEAR ON THE DRAWINGS FOR THIS PROJECT.

ABBREVIATIONS

H	HUMIDIFIER
ISP	INTERNAL STATIC PRESSURE
KW	KILOWATT
LVG	LEAVING
LAT	LEAVING AIR TEMPERATURE
LDB	LEAVING DRY BULB
LWT	LEAVING WATER TEMPERATURE
LWB	LEAVING WET BULB
LIN	LINEAR
LD	LINEAR DIFFUSER
LV	LOW VELOCITY
MFR	MANUFACTURER
MAX	MAXIMUM
MC	MECHANICAL CONTRACTOR
MER	MECHANICAL EQUIPMENT ROOM
MIN	MINIMUM
MCA	MINIMUM CIRCUIT AMPACITY
MOCP	MINIMUM OVER CURRENT PROTECTION
MISC	MISCELLANEOUS
MOT	MOTOR
MHP	MOTOR HORSE POWER
MD	MOTORIZED DAMPER
MTD	MOUNTED
NEG	NEGATIVE
NPSH	NET POSITIVE SUCTION HEAD
NOM	NOMINAL
NIC	NOT IN CONTRACT
NTS	NOT TO SCALE
OA	OUTDOOR AIR
LBS	POUNDS
RLA	RATED LOAD AMPS
RFGR	REFRIGERANT
REG	REGISTER
RHC	REHEAT COIL
RH	RELATIVE HUMIDITY
RA	RETURN AIR
RD	RETURN DIFFUSER
RF	RETURN FAN
RG	RETURN GRILLE
RPM	REVOLUTIONS PER MINUTE
R	RISE
RD	ROOF DRAIN
RM	ROOM
RTU	ROOFTOP AIR CONDITIONING UNIT
SCH	SCHEDULE
SH	SENSIBLE HEAT
SP	STATIC PRESSURE
SA	SUPPLY AIR
SF	SUPPLY FAN
SR	SUPPLY REGISTER
TEMP	TEMPERATURE
TAU	TERMINAL AIR UNIT
T	THERMOSTAT
MBH	THOUSANDS OF BTU PER HOUR
TSP	TOTAL STATIC PRESSURE
TAD	TRANSFER AIR DUCT
TG	TRANSFER GRILLE
TYP	TYPICAL
UH	UNIT HEATER
UON	UNLESS OTHERWISE NOTED
VAV	VARIABLE AIR VOLUME
VEL	VELOCITY
VFD	VOLTAGE FREQUENCY DRIVE
WC	WATER COLUMN
WG	WATER GUAGE
WPD	WATER PRESSURE DROP
WTD	WATER TEMPERATURE DROP
W	WATTS
WB	WET BULB
WMS	WIRE MESH SCREEN

SYMBOLS

AC / X	EQUIPMENT TAG
X / X	SECTION NUMBER & DRAWING NUMBER
X	DETAIL NUMBER
X	SHEET NOTE NUMBER
	POINT OF CONNECT
	POINT OF DISCONNECT
~	PIPET (CONTINUATION)
T	THERMOSTAT

REFERENCE CODES:

1. INTERNATIONAL BUILDING CODE 2021, NJ EDITION
2. INTERNATIONAL MECHANICAL CODE 2021
3. NATIONAL STANDARD PLUMBING CODE 2021, NJ EDITION
4. INTERNATIONAL FUEL GAS CODE 2021
5. NATIONAL ELECTRICAL CODE 2020 (NFPA 70)
6. ASHRAE 90.1 - 2019

GENERAL NOTES:

1. THE INTENT OF THE CONTRACT DOCUMENTS IS TO ALLOW FOR THE PERFORMANCE OF THE WORK. EVERY ITEM NECESSARILY REQUIRED MAY NOT BE SPECIFICALLY MENTIONED OR SHOWN, UNLESS EXPRESSLY STATED. ALL SYSTEMS AND EQUIPMENT SHALL BE COMPLETED AND APPROPRIATELY OPERABLE. FURNISH AND INSTALL ALL SPECIFIED AND APPROPRIATED ITEMS, AND ALL INCIDENTAL, ACCESSORY, AND OTHER ITEMS NOT SPECIFIED BUT REQUIRED FOR A COMPLETE AND FINISHED ASSEMBLY.

2. THE CONTRACTOR IS RESPONSIBLE FOR CHECKING CONTRACT DOCUMENTS, FIELD CONDITIONS, AND DIMENSIONS FOR ACCURACY AND CONFIRMING THAT WORK IS BUILDABLE AS SHOWN BEFORE PROCEEDING WITH CONSTRUCTION. IF THERE ARE ANY QUESTIONS REGARDING THESE OR OTHER COORDINATION ISSUES, THE CONTRACTOR SHALL SUBMIT THEM, IN WRITING, TO THE ENGINEER AND IS RESPONSIBLE FOR OBTAINING A WRITTEN CLARIFICATION FROM THE ENGINEER BEFORE PROCEEDING WITH WORK IN QUESTION, OR RELATED WORK.

3. EXECUTE WORK IN ACCORDANCE WITH ANY AND ALL APPLICABLE LOCAL, STATE, FEDERAL CODES, MANUFACTURER'S RECOMMENDATIONS, TRADE AND REFERENCE STANDARDS INCLUDING BUT NOT LIMITED TO: IBC, SEISMIC CODES, NEC, NFPA, ASME, IMC, LATEST ENFORCED EDITIONS.

4. THERE SHALL BE NO SUBSTITUTION OF MATERIALS WHERE A MANUFACTURER IS SPECIFIED PRIOR TO APPROVAL FROM THE ENGINEER. WHERE THE TERM "OR EQUAL" IS USED, THE ENGINEER ALONE SHALL DETERMINE EQUALITY BASED UPON INFORMATION SUBMITTED BY THE CONTRACTOR. CONTRACTOR IS RESPOSIBLE FOR ASSOCIATED MECHANICAL, ELECTRICAL AND/OR STRUCTURAL CHANGES, ADDITIONS AND/OR ALTERNATIONS IN DESIGN DUE TO SUBMITTED ALTERNATE MANUFACTURER.

5. THE CONTRACTOR SHALL BE RESPONSIBLE FOR THE DISTRIBUTION OF DRAWINGS TO ALL TRADES UNDER HIS JURISDICTION.

6. DO NOT PROCEED WITH ANY WORK REQUIRING ADDITIONAL COMPENSATION BEYOND THE CONTRACT AMOUNT WITHOUT WRITTEN AUTHORIZATION FROM THE OWNER. FAILURE TO OBTAIN AUTHORIZATION SHALL INVALIDATE ANY CLAIM FOR EXTRA COMPENSATION.

7. ALL INSTALLED MECHANICAL EQUIPMENT SHALL OPERATE QUIETLY AND FREE OF VIBRATION.

8. ALL MATERIALS SHALL BE NEW, UNUSED, AND OF THE HIGHEST QUALITY IN EVERY RESPECT UNLESS OTHERWISE NOTED. MANUFACTURED MATERIALS AND EQUIPMENT SHALL BE INSTALLED AS PER MANUFACTURER'S RECOMMENDATIONS AND INSTRUCTIONS, U.O.N.

9. THE CONTRACTOR AND SUBCONTRACTORS SHALL PURCHASE AND MAINTAIN CERTIFICATIONS OF INSURANCE WITH RESPECT TO WORKERS COMPENSATION, PUBLIC LIABILITY AND PROPERTY DAMAGE FOR THE LIMITS AS REQUIRED BY LAW. THE CONTRACTOR SHALL BE RESPONSIBLE FOR INITIATING, MAINTAINING, AND SUPERVISING ALL SAFETY PRECAUTIONS IN CONNECTION WITH THE WORK.

10. VERIFY IN THE FIELD, THAT NO CONFLICTS EXIST WHICH WOULD PROHIBIT THE LOCATION OF ANY AND ALL MECHANICAL, TELEPHONE, ELECTRICAL, LIGHTING, PLUMBING, AND SPRINKLER EQUIPMENT (TO INCLUDE ALL REQUIRED PIPING, DUCTWORK, AND CONDUIT) AND THAT ALL REQUIRED CLEARANCES FOR INSTALLATION AND MAINTENANCE OF ABOVE EQUIPMENT ARE PROVIDED.

11. THE CONTRACTOR IS RESPONSIBLE TO COORDINATE WITH ELECTRICAL INSTALLATION TO PREVENT CONFLICT WITH CLEARANCES AND MAINTAIN SPACE REQUIREMENTS OF ELECTRICAL EQUIPMENT. MECHANICAL EQUIPMENT, DUCT WORK, PIPING OR SUPPORTS FOR MECHANICAL EQUIPMENT SHALL NOT BE INSTALLED IN THE DEDICATED ELECTRICAL SPACE ABOVE ELECTRICAL EQUIPMENT, INCLUDING SWITCHBOARDS, PANEL BOARDS, TRANSFORMERS AND CONTROL PANELS. DEDICATED ELECTRICAL SPACE IS THE SPACE DIRECTLY ABOVE THE ELECTRICAL EQUIPMENT EQUAL IN WIDTH AND DEPTH OF THE ELECTRICAL EQUIPMENT AND FROM THE TOP OF THE ELECTRICAL EQUIPMENT TO THE STRUCTURAL DECK OF FLOOR ABOVE. SIMILARLY, MECHANICAL EQUIPMENT, DUCTWORK, PIPING OR SUPPORTS FOR MECHANICAL EQUIPMENT SHALL NOT BE INSTALLED IN THE DEDICATED WORKING SPACE DIRECTLY IN FRONT OF THE ELECTRICAL EQUIPMENT. MINIMUM 30" WIDE OR EQUAL IN WIDTH OF THE ELECTRICAL EQUIPMENT, 3'-0" DEEP AND FROM FLOOR TO THE STRUCTURAL DECK OF FLOOR ABOVE OR THE CEILING.

12. THE DRAWINGS ARE GENERALLY DIAGRAMMATIC AND ARE INTENDED TO CONVEY THE SCOPE OF WORK AND INDICATE GENERAL ARRANGEMENT OF EQUIPMENT, DUCTS, CONDUITS, PIPING AND FIXTURES. LOCATIONS OF ALL ITEMS SHOWN IN THE DRAWINGS OR CALLED FOR IN THE SPECIFICATIONS THAT ARE NOT DEFINITELY FIXED BY DIMENSIONS ARE APPROXIMATE ONLY. DO NOT SCALE DRAWINGS. CONTRACTOR IS RESPONSIBLE TO SUBMIT HIS/HER SHOP DRAWINGS AFTER COORDINATION WITH OTHER TRADES AND VERIFYING FIELD CONDITIONS. THE CONTRACTOR MAY OBTAIN THE CAD FILES FOR THE FLOOR PLANS AND REFLECTED CEILING PLANS FROM THE ARCHITECT. HE/SHE MUST GENERATE HIS/HER OWN SHOP DRAWINGS ON CAD FOR M-E-P-FP TRADES BASED ON THE FIELD CONDITIONS AND /OR COORDINATION WITH OTHER TRADES. EQUIPMENT LOCATIONS, ROUTING OF DUCTWORK, PIPING AND ELECTRICAL WIRES, CONDUITS AND CABLES, ETC. SHALL SECURE THE BEST CONDITIONS AND RESULTS AND SHALL BE DETERMINED BY THE CONTRACTOR AT THE PROJECT. SHOP DRAWINGS SHALL HAVE THE APPROVAL OF THE ARCHITECT/ENGINEER BEFORE PROCUREMENT AND INSTALLATION OF ANY ITEM.

CONSTRUCTION NOTES:

1. THROUGHOUT THE DURATION OF THE PROJECT REFRAIN FROM ACTIONS THAT COULD LEAD TO THE FILING OF CLAIMS OF LIEN BY SUBCONTRACTORS, SUPPLIERS OF MATERIALS, LABOR, SERVICE, EQUIPMENT, OR ANY OTHER INDIVIDUAL OR COMPANY SO ENTITLED UNDER GOVERNING LAWS AND REGULATIONS UNLESS REASONABLE AND JUSTIFIABLE CAUSE CAN BE SHOWN. APPROVAL FOR PAYMENT SHALL BE CONTINGENT UPON THE CONTRACTOR'S OBTAINING AND FURNISHING TO THE OWNER SIGNED RELEASES FROM SUCH INDIVIDUALS OR COMPANIES.

2. UPON NOTIFICATION OF COMPLETION OF THE WORK AND DELIVERY OF THE CONTRACTOR'S PUNCH-LIST, THE ENGINEER SHALL PREPARE A PUNCH- LIST OF CORRECTIONS, UNSATISFACTORY AND/OR INCOMPLETE WORK. FINAL PAYMENT WILL BE CONTINGENT UPON THE COMPLETION OF THESE ITEMS UNDER THE TERMS OF THE OWNER/CONTRACTOR AGREEMENT.

3. COORDINATE ALL WORK WITH THE BUILDING MANAGER TO AVOID CONFLICT AND INTERFERENCE WITH NORMAL BUILDING OPERATIONS. COMPLYING WITH THE BUILDING'S REGULATIONS REGARDING SCHEDULING AND USE OF ELEVATORS AND LOADING DOCKS FOR DELIVERIES, HANDLING OF MATERIALS, EQUIPMENT, AND DEBRIS.

4. PROVIDE PROTECTION TO ALL EXISTING FINISHES IN ALL SPACES TO BE MAINTAINED WITHIN OR ADJACENT TO THE SCOPE OF WORK AND THE TENANT'S SPACE. THE CONTRACTOR SHALL PATCH AND REPAIR ANY DAMAGE CAUSED BY HIM OR HIS SUBCONTRACTORS, REFINISH TO MATCH EXISTING ADJACENT FINISH, OR AS NOTED HEREIN.

5. PROVIDE STRICT CONTROL OF JOB CLEANING AND PREVENT DUST AND DEBRIS FROM EMANATING FROM CONSTRUCTION AREA.

6. CONTRACTOR SHALL THOROUGHLY EXAMINE THE PREMISES AND SHALL BASE HIS BID ON THE EXISTING CONDITIONS, NOT WITHSTANDING ANY INFORMATION SHOWN OR NOT INDICATED ON THE CONTRACT DOCUMENTS.

7. CONTRACTOR SHALL BE RESPONSIBLE FOR HIS WORK WITH ITS COMPLETION AND FINAL ACCEPTANCE AND SHALL REPLACE ANY OF SAME WHICH MAY BE DAMAGED, LOST OR STOLEN, WITHOUT ADDITIONAL COSTS TO THE OWNER.

8. REMOVAL AND RELOCATION OF CERTAIN EXISTING WORK MAY BE NECESSARY FOR THE PERFORMANCE BY THE GENERAL WORK. ALL EXISTING CONDITIONS CANNOT BE COMPLETELY DETAILED ON THE DRAWINGS. THE CONTRACTOR SHALL SURVEY THE SITE AND INCLUDE ALL CHANGES IN MAKING UP THE WORK PROPOSAL.

9. ALL ELECTRICAL CONTROL WORK INCLUDING MOUNTING OF DEVICES SHALL BE THE RESPONSIBILITY OF THE CONTRACTOR.

10. ALL RIGGING OF EQUIPMENT SHALL BE THE RESPONSIBILITY OF THE CONTRACTOR.

11. CONTRACTOR IS RESPONSIBLE FOR PROTECTING EXISTING STRUCTURE SUCH AS ROOF, WALL, PARTITIONS AND CEILINGS DURING CONSTRUCTION. ANY CHANGE SHALL BE RESPONSIBILITY OF THE CONTRACTOR TO BE RESTORED TO THE ORIGINAL CONDITIONS.

12. ANY ROAD BLOCKING REQUIRED SHALL BE COORDINATED BY THE CONTRACTOR. ALL FEES RELATED TO THIS EFFORT SHALL BE THE RESPONSIBILITY OF CONTRACTOR.

13. ALL ROOF PATCHING AND SEALING WALL SHALL BE THE RESPONSIBILITY OF THE CONTRACTOR.

14. UPON COMPLETION OF INSTALLATION, PERFORM TEST OF ALL HVAC EQUIPMENT AND OPERATION IN THE PRESENCE OF THE OWNER'S REPRESENTATIVE. ALL EQUIPMENT SHALL OPERATE SAFELY AND AUTOMATICALLY AS REQUIRED BY THE BIDDING DOCUMENTS.

15. THE CONTRACTOR SHALL HAVE A FOREMAN ON SITE DURING ALL ASPECTS OF THE WORK.

16. CONTRACTOR AND SUB-CONTRACTOR SHALL FOLLOW RULES AND REGULATIONS AS LAID DOWN BY THE OWNER.

17. CONTRACTOR SHALL PERFORM ALL WORK TO MEET LOCAL CODES AND REGULATIONS.

MECHANICAL SPECIFICATIONS:

A. SCOPE OF WORK

1. PERFORM ALL NECESSARY CUTTING, PATCHING AND PAINTING OF WALLS, FLOORS AND ROOF EXISTING TO MATCH, FILL IN CLEARANCES AROUND PIPE WITH FIRE RETARDANT SEALANT MATERIAL.
2. ALL WORK FLOOR AREA, ROOF AREA SHALL BE PROTECTED FROM DAMAGE, DUST AND DIRT. PROVIDE SUFFICIENT FIREPROOF TARPAULINS AND PLYWOOD IN WORK AREA.
3. PROVIDE DUST PROOF PARTITIONS CLOSING THE WORK AREA FROM THE REMAINDER OF THE OCCUPIED SPACES.
4. EXISTING SURFACES WHICH ARE DAMAGED OR DISTURBED DURING DEMOLITION OR CONSTRUCTION SHALL BE PATCHED AND REPAIRED TO MATCH EXISTING SURFACES TO THE SATISFACTION OF THE ENGINEER AND OWNER.
5. PRIOR TO COMMENCEMENT OF WORK, CONTRACTOR SHALL VISIT SITE AND PERFORM A COMPLETE SURVEY OF ALL EXISTING CONDITIONS AND SHALL MAKE NOTE OF ANY OBSTRUCTIONS AND INTERFERENCE OF NEW WORK WITH EXISTING EQUIPMENT, WORK AND FIELD CONDITIONS. ANY MATERIAL OR WORK NOT SHOWN ON DRAWING BUT NECESSARY TO MAKE THE WORK COMPLETE SHALL BE PROVIDED WITHOUT ADDITIONAL EXPENSE TO THE OWNER.
6. UPON COMPLETION OF INSTALLATION, PERFORM TESTING OF ENTIRE INSTALLATION AND ALL SAFETY FEATURES SHALL BE TESTED IN THE PRESENCE OF THE OWNERS REPRESENTATIVE.
7. ALL WORK SHALL BE DONE IN ACCORDANCE WITH APPLICABLE CODE.
8. PROMPTLY REMOVE ALL DEBRIS FROM SITE AND BROOM CLEAN THE WORK AREA AT THE END OF EACH DAY.

B. SHOP DRAWINGS

1. SUBMIT A MAXIMUM OF SIX (6) COPIES OF ALL EQUIPMENT, MATERIALS, PIPING AND WIRING DIAGRAM FOR ENGINEER'S REVIEW PRIOR TO PURCHASE OR FABRICATION OR INSTALLATION AND FURTHER OBTAIN WRITTEN COMMENTS AND APPROVAL FOR THE SAME.
2. FAILURE TO SUBMIT SHOP DRAWINGS IN AMPLE TIME FOR CHECKING SHALL NOT ENTITLE AN EXTENSION OF CONTRACT TIME, AND NO CLAIM FOR EXTENSION BY REASON OF SUCH DEFAULT WILL BE ALLOWED.

C. OPERATION AND MAINTENANCE MANUALS

1. AFTER INSTALLATION IS COMPLETE, INSTRUCT THE OWNER'S REPRESENTATIVE IN THE PROPER OPERATION AND MAINTENANCE OF ALL EQUIPMENT AND SYSTEMS. SUBMIT DIGITAL AND THREE (3) HARD COPIES OF ALL OPERATION AND MAINTENANCE MANUALS TO OWNERS REPRESENTATIVES.

D. AS BUILT

1. SUBMIT DIGITAL AND THREE (3) COPIES OF "AS BUILT" DRAWINGS AFTER INSTALLATION IS TESTED.

E. EXECUTION

1. VERIFY FINAL LOCATIONS FOR ROUGH-INS WITH FIELD MEASUREMENTS AND WITH THE REQUIREMENTS OF THE EQUIPMENT TO BE CONNECTED.
2. COORDINATE WITH OTHER TRADES TO AVOID CONFLICTS GIVING RIGHT-OF-WAY PRIORITY TO SYSTEMS REQUIRED TO BE INSTALLED AT A SPECIFIC TIME.
3. PERFORM CUTTING, PATCHING AND PAINTING OF FINISHED SURFACES, SLABS, STRUCTURAL AND BUILDING COMPONENTS TO FACILITATE INSTALLATION AND/OR DEMOLITION OF MECHANICAL EQUIPMENT.

F. WARRANTY

1. ALL EQUIPMENT FURNISHED AND INSTALLED UNDER THIS CONTRACT SHALL BE COVERED BY A FULL, ONE YEAR GUARANTEE. THE WARRANTY SHALL COMMENCE ON THE DATE OF BENEFICIAL OCCUPANCY.

G. EQUIPMENT

1. REFER TO MECHANICAL SCHEDULES FOR EQUIPMENT SPECIFICATIONS.

H. GENERAL REQUIREMENTS FOR DUCTWORK

1. THE DRAWING(S) INCLUDE THE GENERAL ARRANGEMENT OF THE SHEET METAL WORK. EXAMINE THE DRAWING(S) AND BE RESPONSIBLE FOR PROPER FITTING OF THE WORK WITHOUT SUBSTANTIAL ALTERATION TO THE INDICATED LAYOUT.
2. DUCTWORK, INCLUDING SHEET THICKNESS, MATERIAL GAUGES, CONSTRUCTION OF DUCTS, SUPPORTS AND HANGERS, AND ALL OTHER APPURTENANCES SHALL BE FABRICATED AS SPECIFIED HEREIN. DUCTWORK SHALL BE FABRICATED IN ACCORDANCE WITH "SMACNA HVAC DUCT CONSTRUCTION STANDARDS" AS FOLLOWS:
   1. RECTANGULAR DUCTWORK

LARGEST SIDE DIMENSION (UP TO 2')	GAUGE (ALL FOUR SIDE) LOW PRESSURE (2" UP TO 5")	MEDIUM PRESSURE (5" & ABOVE)	HIGH PRESSURE
UP THROUGH 12"	24	24	22
13" THROUGH 18"	24	24	22
19" THROUGH 30"	24	22	22
31" THROUGH 48"	22	22	22
49" THROUGH 54"	20	20	20
55" THROUGH 72"	20	20	20
73" THROUGH 84"	20	18	18
85" AND OVER	18	18	16

   2. ROUND DUCTWORK (GALVANIZED) SPIRAL LOCK SEAM CONSTRUCTION

DUCT DIAMAETER	LOW PRESSURE	MEDIUM PRESSURE
UP THROUGH 8"	24	24
9" THROUGH 13"	24	24
14" THROUGH 22"	24	24
23" THROUGH 36"	22	22
37" THROUGH 50"	20	20

   ALL RECTANGULAR AND ROUND DUCTWORK SHALL BE CONSTRUCTED TO LOW PRESSURE STANDARD, AS ABOVE.

I. FABRICATION:

1. FABRICATION REQUIREMENTS SPECIFIED UNDER INDIVIDUAL DUCTWORK SYSTEM DESCRIPTION. CONFORM ACCURATELY TO DIMENSIONS SHOWN WITH DUCTS STRAIGHT AND WITH JOINTS NEATLY FINISHED. RIGIDLY BRACE AND REINFORCE DUCTS WITH ANGLES OR OTHER STRUCTURAL MEMBERS. MAKE INTERNAL ENDS OF SLIP JOINTS LAY WITH THE FLOW.
2. ELBOWS IN RECTANGULAR DUCTWORK:
   a. SQUARE THROAT ELBOWS LARGER THAN 8"; DOUBLE THICKNESS TURNING VANES.
   b. SECURELY FASTEN VANES TO RUNNERS FOR QUIET, VIBRATION FREE OPERATION.
   c. SQUARE THROAT ELBOWS 8" AND SMALLER; RADIUS ELBOWS.
   d. RADIUS ELBOWS; MINIMUM CENTER LINE RADIUS OF 1½ TIMES DUCT WIDTH.
   e. IN PARALLEL FLOW BRANCHES WITH 8" NECK AND SMALLER; MAKE 90° TURNS OUT OF NESTED FITTINGS WITH RADIUS ELBOWS.
3. PROVIDE INSIDE COLLARS WHERE REGISTERS OR GRILLES ARE MOUNTED FLUSH TO THE DUCTWORK. USE MINIMUM SIZE COLLARS REQUIRED TO INSTALL A CONTROLLER WHICH WILL PRODUCE UNIFORM AIR FLOW OVER THE FACE OF THE REGISTER OR GRILLE.
4. HOLES IN DUCTWORK:
   a. PLUGS: LOW DENSITY POLYETHYLENE, SNAP-IN TYPE: NIAGARA PLASTICS COMPANY MODEL 659 FOR ¾" HOLE.
   b. TEST HOLES: INSTRUMENT TEST HOLES, SIZED TO SUIT INSULATION THICKNESS WITH FLAT GASKET, SCREW CAP AND CONNECTION HARDWARE IN MATERIAL TO SUIT DUCTWORK; VENTFABRICS VENTLOCK MODEL 699. USE CONCAVE GASKETS FOR ROUND DUCT.
   c. WHERE IT IS NECESSARY FOR PIPES, HANGERS, CONDUITS OR OTHER DEVICES TO PENETRATE DUCTWORK, OBTAIN A/E ACCEPTANCE OF THE LOCATIONS. PROVIDE AN AIRFOIL OF THE PROPER DESIGN AND INCREASE DUCT SIZE AS REQUIRED TO SATISFY EACH INDIVIDUAL CONDITION. PROVIDE GASKETS, FLANGERS AND APPLY SEALANT TO MAKE OPENING AIR TIGHT.
5. DISSIMILAR METALS: MAKE CONNECTIONS USING FULLY GASKETED FLANGERS.
6. WHERE DUCTS ARE LOCATED OUTDOORS, LOCATE LONGITUDINAL SEAMS ON THE BOTTOM OF THE DUCT AND CROSSBREAK TOP SURFACES TO SHED WATER.

RADIANT ELECTRIC HEATER SCHEDULE

UNIT TAG	LOCATION	L X W	CAPACITY (WATTS)	VOLT	PH	HZ	AMPS	BASIS OF DESIGN	MODEL	REMARKS
EH - 1	AS SHOWN ON DRAWING	53.2" X 10.1"	4,500	208	1	60	21.6	BROMIC HEATING	BH32622003	1,2,3,4,5,6

REMARKS:

1. PROVIDE MARINE GRADE 316 SS PLATINUM ELECTRIC HEATER.
2. PROVIDE BLACK FINISH. ARCHITECT SHALL REVIEW AND APPROVE FINAL COLOR AND FINISH.
3. PROVIDE MOUNTING BRACKETS.
4. PROVIDE OVER TEMPERATURE THERMAL LIMIT PROTECTION.
5. PROVIDE DIMMER REMOTE CONTROLLER FOR ALL HEATERS. PRODUCT NO: BH3130011-2
6. PROVIDE ONE MASTER REMOTE CONTROLLER TO CONTROL ALL HEATERS. PRODUCT NO: BH3130011-2.
   REFER TO FLOOR PLANS FOR ZONING OF HEATERS. CONTRACTOR IS RESPONSIBLE TO PROGRAM THE ZONING AS NOTED ON DRAWINGS.

ELECTRIC HEATER SCHEDULE

UNIT TAG	LOCATION	CAPACITY (KW)	FAN DATA				AMP	BASIS OF DESIGN	MODEL	REMARKS
			CFM	VOLTS	PHASE	HZ				
UH - 1	AS SHOWN ON DRAWING	5.0	350	208	3	60	14.2	INDEECO	UHIR 240-U1050D	1,2,3,4,6,7
EWH - 1	AS SHOWN ON DRAWING	2.0	160	208	1	60	10.0	INDEECO	WCI 932U0200DC	1,2,3,4,5,6
CH - 1	AS SHOWN ON DRAWING	2.25	160	208	1	60	11.2	INDEECO	CCI 931U03000V	1,2,3,4,5,6

REMARKS:

1. PROVIDE DISCONNECT SWITCH.
2. PROVIDE OVER TEMPERATURE THERMAL LIMIT PROTECTION.
3. COLOR SHALL BE SELECTED BY THE ARCHITECT.
4. PROVIDE MOUNTING HARDWARE.
5. PROVIDE WALL MOUNTED THERMOSTAT. CATALOG NO: 1007014.
6. PROVIDE 24V CONTROL TRANSFORMER AND RELAY KIT.
7. PROVIDE WALL MOUNTED 2 STAGE THERMOSTAT. CATALOG NO: 1007030.

HVLS FAN SCHEDULE

TAG	LOC.	SIZE	MOTOR HP	CONTROLLER	AFFECTED AREA (SQFT)	ELECTRICAL PERFORMANCE				BASIS OF DESIGN	MODEL	REMARKS
						V.	PH.	HZ	FLA			
HVLS-1	DINING	6 FT	1/10	STANDARD TOUCHSCREEN	2,600	115	1	60	-	GREENHECK	DC-5	1,2,3

REMARKS:

1. PROVIDE ADJUSTABLE HANGING ROD. COORDINATE ROD HEIGHT WITH SITE CONDITIONS AND ARCHITECTURAL DRAWINGS.
2. PROVIDE STANDARD TOUCHSCREEN CONTROLLER.
3. PROVIDE FACTORY FURNISHED AND WIRED VFD FOR FAN MOTOR.

EXHAUST FAN SCHEDULE

UNIT NO.	LOC.	SERVING	AIRFLOW (CFM)	MIN. EXT. STATIC PRESS. (IN. W.G.)	FAN SPEED (RPM)	FAN TYPE	MOTOR DATA						BASIS OF DESIGN	MODEL	REMARKS
							BHP	HP	RPM	V.	PH.	HZ.			
EF-1	MECHANICAL LOFT	DINING	2000	0.50	1011	INLINE	-	0.5	1050	115	1	60	COOK	SQN-D	1, 2, 3

REMARKS:

1. PROVIDE PRE-WIRED DISCONNECT SWITCH AND SPEED CONTROL.
2. PROVIDE ALUMINUM BACKDRAFT DAMPER AND BIRDSCREEN.
3. PROVIDE SUPPORT WITH SPRING VIBRATION ISOLATION.

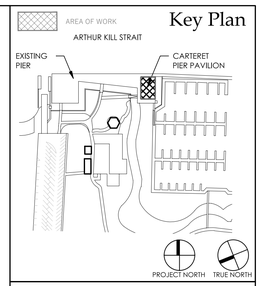

PROJECT

CARTERET PIER PAVILION

WATERFRONT PARK
200 MIDDLESEX AVENUE BLOCK 201 LOT 4
CARTERET, NEW JERSEY 07008

GEOTECHNICAL & STRUCTURAL ENGINEER

McLaren Technical Services, Inc.
Woodcliff Lake, New Jersey 07677
201.775.6000 | www.mgmclaren.com

MEP ENGINEER

KeRi ENGINEERING PC
911 Springfield Rd, Suite 2
Union, NJ 07083
T : 973.866.KeRi (5374)
F : 973.866.5370
W : keriengineering.com

CIVIL ENGINEER

1460 RT. 9 SOUTH
HOWELL, NEW JERSEY 07731
INFO@CMEUSA1.COM
732.462.7400

KITCHEN DESIGN CONSULTANT

44 ST. JOHN STREET
GOSHEN, NEW YORK
845.360.5112
INFO@RRADESIGNS.COM

DMR
ARCHITECTURE
PLANNING
ENGINEERING
INTERIORS
CONSULTING
www.dmrarchitects.com

MEMBERS OF THE AMERICAN INSTITUTE OF ARCHITECTS

LLOYD A. ROSENBERG	NJ - AI 05526
KURT A. VIERHEILIG	NJ - AI 17809
PRADEEP KAPOOR	NY - 042197
FERNANDO ROBLEDO	NY - 033804
JANET PINI	NJ - AI 02102900

NOT VALID FOR BIDDING UNLESS SIGNED AND SEALED BY ARCHITECT

777 Terrace Avenue, 6th Floor
Hasbrouck Heights, New Jersey 07604
Tel 201 - 288 - 2600 || Fax 201 - 288 - 2662

NCARB NATIONAL COUNCIL OF ARCHITECTURAL REGISTRATION BOARDS

CO - 306 184 CT - 05438 NJ - AI 05526
NJ BOARD OF PROFESSIONAL PLANNERS) - LI 01564
NY - 013025-1 PA - RA - 13437-8

DWG TITLE :

SYMBOLS, NOTES, ABBREVIATIONS, SPECIFICATIONS & SCHEDULES

SCALE: As indicated

DATE	DESCRIPTION	DRN	CHK
06/26/2023	RELEASED FOR BID	MS	VP

REV.	DATE	DESCRIPTION		

PROJECT NO. 5146

SHEET NO. M-001

Copyright © 2022 by DMR

PLOT DATE: 11/4/2022 3:33:09 PM

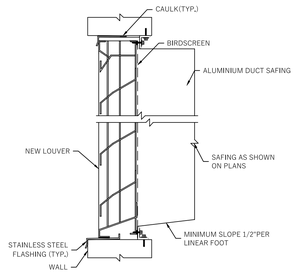

3 LOUVER INSTALLATION DETAIL
SCALE: N.T.S.

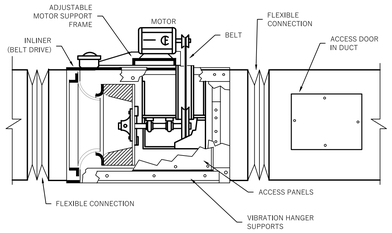

4 TYPICAL IN-LINE CENTRIFUGAL FAN
SCALE: N.T.S.

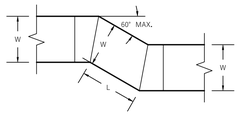

5 OFFSET MITERED
SCALE: N.T.S.

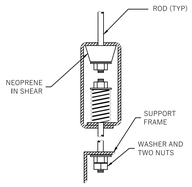

6 VIBRATION ISOLATOR DETAIL
SCALE: N.T.S.

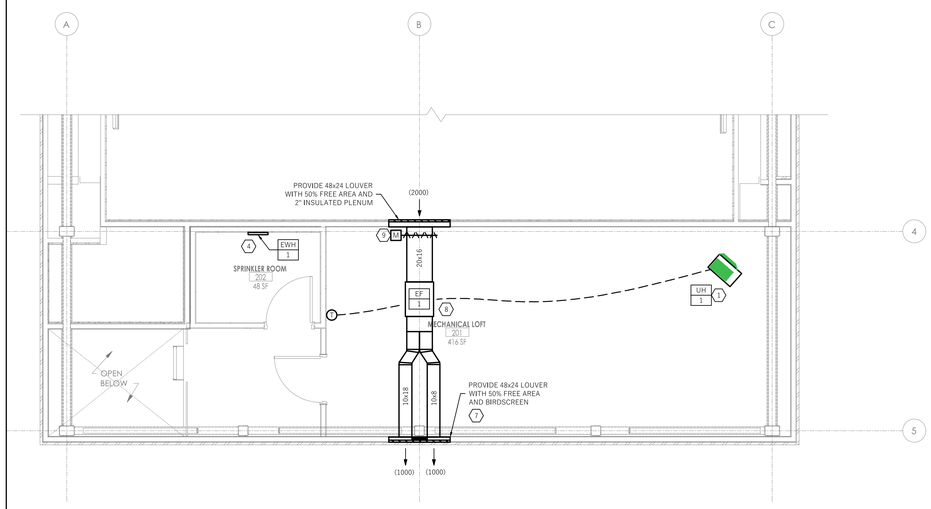

1 ATTIC MECHANICAL NEW WORK
SCALE: 1/4" = 1'-0"

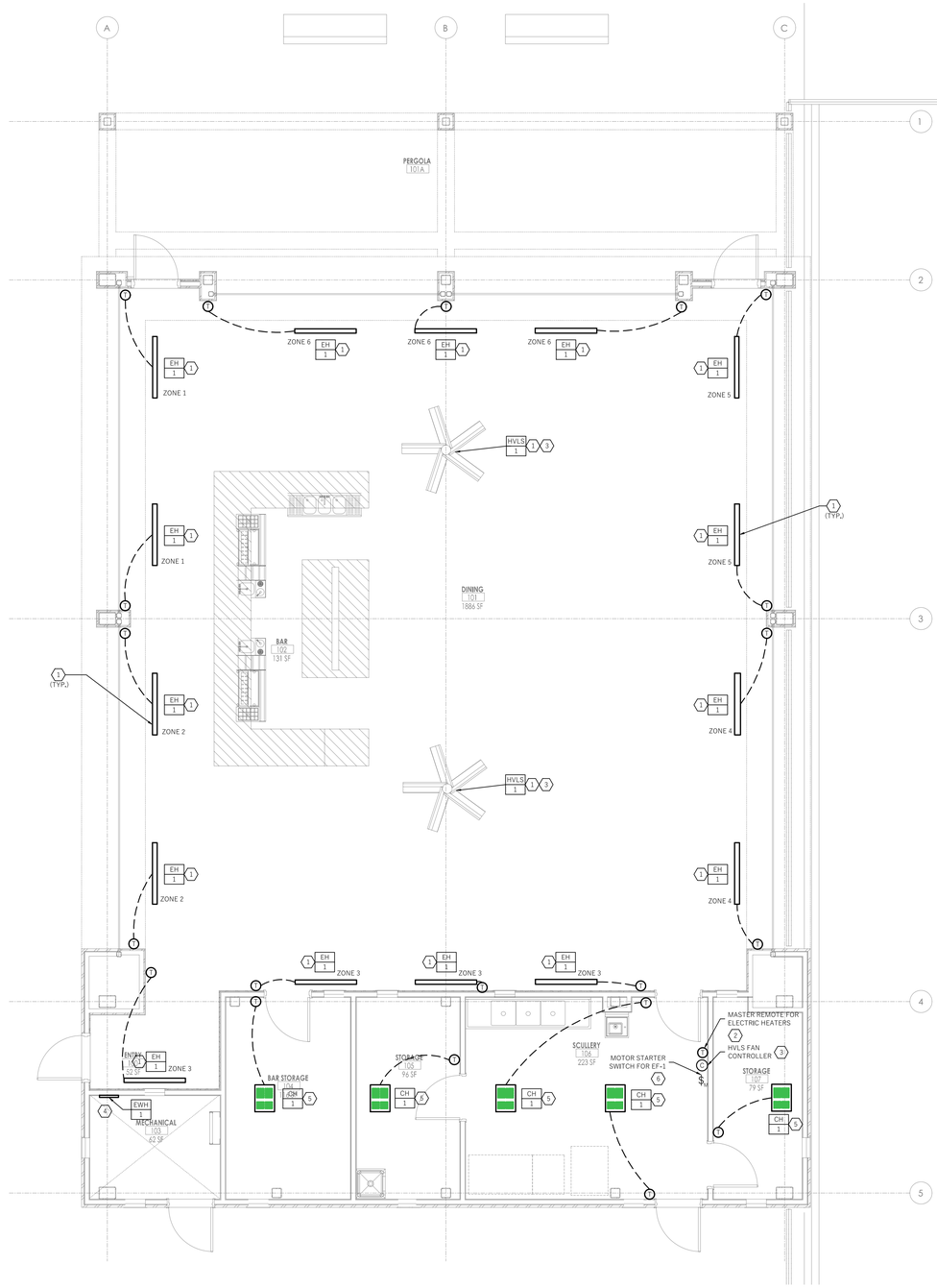

2 GROUND FLOOR MECHANICAL NEW WORK
SCALE: 1/4" = 1'-0"

GENERAL NOTES:

1. CONTRACTOR SHALL BE RESPONSIBLE TO PROTECT THE AREA OF WORK FROM ANY DAMAGE, DUST AND DEBRIS.
2. CONTRACTOR IS RESPONSIBLE TO COORDINATE WITH ALL TRADES BEFORE STARTING ANY WORK. ANY CONFLICTS SHALL BE BROUGHT TO DESIGN TEAM'S ATTENTION BEFORE PROCEEDING WITH ANY WORK.
3. FIELD VERIFY FINAL LOCATION OF THERMOSTATS IN FIELD.
4. CONTRACTOR SHALL BE RESPONSIBLE COORDINATE AND PROGRAM ALL CONTROLLERS FOR HEATERS AND FANS UNDER THIS SCOPE OF WORK.

SHEET NOTES:

1. CONTRACTOR SHALL PROVIDE ADJUSTABLE MOUNTING BRACKETS FROM EQUIPMENT MANUFACTURE. COORDINATE EXACT MOUNTING HEIGHT WITH ARCHITECTURAL DRAWINGS.
2. PROVIDE MASTER REMOTE CONTROLLER FROM HEATER MANUFACTURER. PROVIDE SIX (6) ZONE CONTROLS AS IDENTIFIED ON DRAWINGS. COORDINATE PROGRAMING WITH MANUFACTURE'S INSTILLATION GUIDELINES.
3. CONTRACTOR IS RESPONSIBLE TO PROVIDE CAT- 5E WIRING BETWEEN HVLS FANS AND CONTROLLER. PROVIDE ALL WIRING IN RIGID CONDUIT. PROGRAM EACH FAN PER MANUFACTURER'S RECOMMENDATIONS.
4. WALL HEATER SHALL BE SURFACE MOUNTED ON WALL.
5. CEILING HEATER SHALL BE SURFACE MOUNTED ON NEW GYP. BD. CEILING
6. CONTRACTOR SHALL PROVIDE MOTOR RATED SWITCH FOR EF-1 AT THE INDICATED LOCATION.
7. CONTRACTOR SHALL PROVIDE TWO (2) 16x24 OPENING ON A 48X24 LOUVER AS INDICATED. CONTRACTOR TO BLANK OFF THE LOUVER PORTION BEHIND THE COLUMN WITH INSULATION AND METAL PLATE.
8. CONTRACTOR SHALL PROVIDE TRANSITIONS AS REQUIRED FOR PROPER INSTALLATION OF THE FAN. PROVIDE FLEXIBLE CONNECTIONS AT THE INLET AND DISCHARGE OS THE FAN.
9. PROVIDE MOTORIZED DAMPER INTERLOCKED WITH EF-1 OPERATION. DAMPER SHALL BE POWERED FROM EF-1 CIRCUIT.

Key Plan

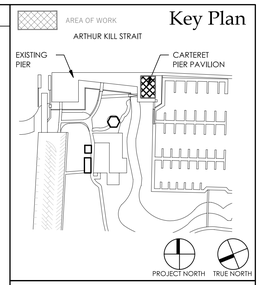

PROJECT
CARTERET PIER PAVILION

WATERFRONT PARK
200 MIDDLESEX AVENUE BLOCK 201 LOT 4
CARTERET, NEW JERSEY 07008

GEOTECHNICAL & STRUCTURAL ENGINEER

McLaren Technical Services, Inc.
Woodcliff Lake, New Jersey 07677
201.775.6000 | www.mgmclaren.com

MEP ENGINEER

KeRi ENGINEERING PC
911 Springfield Rd, Suite 2
Union, NJ 07083
T : 973.866.KeRi (5374)
F : 973.866.5370
W : keriengineering.com

CIVIL ENGINEER

1460 RT. 9 SOUTH
HOWELL, NEW JERSEY 07731
INFO@CMESA1.COM
732.462.7400

KITCHEN DESIGN CONSULTANT

44 ST. JOHN STREET
GOSHEN, NEW YORK
845.360.3112
INFO@RRADESIGNS.COM

DMR
ARCHITECTURE
PLANNING
ENGINEERING
INTERIORS
CONSULTING
www.dmrarchitects.com

MEMBERS OF THE AMERICAN INSTITUTE OF ARCHITECTS

LLOYD A. ROSENBERG	NJ - AI 05526
KURT A. VIERHBLIG	NJ - AI 17809
PRADEEP KAPOOR	NY - 042197
FERNANDO ROBLEDO	NY - 033804
JANET PINI	NJ - AI 02102900

NOT VALID FOR BIDDING UNLESS SIGNED AND SEALED BY ARCHITECT

777 Terrace Avenue, 6th Floor
Hasbrouck Heights, New Jersey 07604
Tel 201 - 288 - 2600 || Fax 201 - 288 - 2662

NCARB NATIONAL COUNCIL OF ARCHITECTURAL REGISTRATION BOARDS

CO - 306 184 CT - 05438 NJ - AI 05526
NJ BOARD OF PROFESSIONAL PLANNERS | - LI 01584
NY - 013025-1 PA - RA - 13437-8

DWG TITLE :

MECHANICAL NEW WORK

SCALE: As indicated

DATE	DESCRIPTION	DRN	CHK
06/26/2023	RELEASED FOR BID	MS	VP

REV.	DATE	DESCRIPTION		

PROJECT NO. 5146

SHEET NO. M-101

Copyright © 2022 by DMR

PLOT DATE: 11/4/2022 3:33:09 PM

POWER SYMBOLS

	DUPLEX RECEPTACLE , 18" AFF
	GFCI DUPLEX RECEPTACLE
WS	DUPLEX RECEPTACLE, SURFACE MOUNTED
	SPECIAL PURPOSE WIRING DEVICE -208V, RATING AS INDICATES
	SPECIAL PURPOSE WIRING DEVICE -480V, RATING AS INDICATED
	DOUBLE DUPLEX (QUAD) RECEPTACLE
	DUPLEX RECEPTACLE - PEDESTAL OR LAB BENCHTOP MOUNTED
	VOICE/DATA - PEDESTAL MOUNTED
	DUAL CHANNEL RACEWAY FROM LEGRAND, S4000 SERIES
	HATCH ON ANY DEVICE INDICATES REMOVAL
$M	MOTOR RATED SWITCH
$V	VOLUME CONTROL SWITCH
T	TRANSFORMER
	VOICE/DATA OUTLET
	DATA OUTLET
	VOICE OUTLET
	WALL MOUNTED POWER AND DATA POINT OF ENTRY TO WORKSTATION
	ELECTRICAL PANEL, 120/208V CU BUS, BOLT-ON CIRCUIT BREAKERS & SEPARATE GROUND BUS.
	ELECTRICAL PANEL, 277/460V CU BUS, BOLT-ON CIRCUIT BREAKERS & SEPARATE GROUND BUS.
	JUNCTION BOX - WALL MOUNTED
	JUNCTION BOX - CEILING MOUNT
	DISCONNECT SWITCH
	FUSED DISCONNECT SWITCH
	MOTOR STARTER (HAND/OFF/AUTO)
	DEDICATED BRANCH CIRCUIT, HOMERUN TO PANEL, MINIMUM 2#10 +1#10G IN 3/4"C "U.O.N"
	CIRCUIT BREAKER
WAP	WIRELESS ACCESS POINT (CEILING MOUNTED)
	WALL COAXIAL OUTLET
CR	CARD REDER
	PUSH BUTTON
SP	SPEAKER - CEILING MOUNTED
SP	SPEAKER - WALL MOUNTED
	CAMERA - WALL MOUNTED
	CAMERA - CEILING MOUNTED
MS	MOTION SENSOR
	AUDIBLE/VISIBLE ALARM
	AUDIBLE ALARM

REFERENCE CODES:

1. INTERNATIONAL BUILDING CODE 2021, NJ EDITION
2. INTERNATIONAL FIRE CODE 2021
3. INTERNATIONAL MECHANICAL CODE 2021
4. NATIONAL STANDARD PLUMBING CODE 2021, NJ EDITION
5. INTERNATIONAL FUEL AND GAS CODE 2021
6. NATIONAL ELECTRICAL CODE 2020
7. ASHRAE 90.1 - 2019
8. BARRIER FREE SUBCODE: ICC/ANSI A117.1-2017

NOTE:

ALL ABBREVIATIONS AND SYMBOLS MAY NOT APPEAR ON THE DRAWINGS FOR THIS PROJECT.

FIRE ALARM SYMBOLS

F	MANUAL FIRE ALARM PULL STATION
	FIRE ALARM STROBE ONLY 15/75cd
F	FIRE ALARM HORN AND STROBE 75cd
S	SMOKE DETECTOR
DSD	DUCT SMOKE DETECTOR
H	HEAT DETECTOR
CO	CARBON MONOXIDE DETECTOR
TS	TAMPER SWITCH
FS	FLOW SWITCH
F	FIRE ALARM AUDIO/VISUAL

LIGHTING SYMBOLS

	TYPICAL NORMAL POWER LIGHT FIXTURE. REFER TO LIGHT FIXTURE SCHEDULE FOR EXACT TYPES.
EM	TYPICAL EMERGENCY LIGHT FIXTURE. REFER TO LIGHT FIXTURE SCHEDULE FOR EXACT.
OS	OCCUPANCY SENSOR
VS	VACANCY SENSOR
	DIMMER SWITCH
	EXIT SIGN
	EXIT SIGN WITH DIRECTIONAL ARROW
	COMBINATIONS EXIT SIGN AND EMERGENCY LIGHTING UNIT.
$	SINGLE POLE DECORATOR QUITE ROCKER SWITCH
$3	3-WAY DECORATOR QUITE ROCKER SWITCH
$4	4-WAY DECORATOR QUITE ROCKER SWITCH
$OR	OVERRIDE SWITCH
$OS	OCCUPANCY SENSOR SWITCH
$K	KEY SWITCH

ABBREVIATIONS

A	AMPERES
AFF	ABOVE FINISHED FLOOR
C/CDT	CONDUIT
E	EXISTING
ETR	EXISTING TO REMAIN
D	TO BE DEMOLISHED
kVA	KILOVOLT AMPERES
RE	RELOCATE EXISTING
RTP	RELOCATE TO POSITION INDICATED
V	VOLTS
W	WATTS
N	NEW
EM	EMERGENCY
TYP.	TYPICAL
U.O.N.	UNLESS OTHERWISE NOTED
WP	WEATHERPROOF

GENERAL NOTES

1. THE WORD PROVIDE IN THESE ELECTRICAL SPECIFICATIONS AND DRAWINGS MEANS TO FURNISH AND INSTALL.
2. ELECTRICAL CONTRACTOR IS RESPONSIBLE FOR ALL CHASES, OPENINGS, HOLES, SLEEVES, DRILLING ETC. PERTAINING TO HIS WORK.
3. PRIOR TO SUBMISSION OF BID, THE ELECTRICAL CONTRACTOR SHALL VISIT THE JOB SITE TO FAMILIARIZE HIMSELF WITH THE EXISTING CONDITIONS AND TO DETERMINE HIS SCOPE OF WORK.
4. ELECTRICAL CONTRACTOR SHALL SUBMIT HIS BID BASED ON THE MATERIALS SPECIFIED. SUBSTITUTIONS ARE SUBJECT TO APPROVAL BY OWNER.
5. THE WORK SHALL INCLUDE SUPPLYING ALL LABOR, EQUIPMENT, AND PROVIDING ALL MATERIALS NECESSARY FOR A COMPLETE ELECTRICAL INSTALLATION, AS SHOWN ON THE DRAWINGS AND AS SPECIFIED HERE IN.
6. ALL ELECTRICAL EQUIPMENT INCLUDING PANELS, ENCLOSURES, WIRE, CONDUIT, BOXES, FITTINGS, ETC SHALL BE SUITABLE AND APPROVED FOR USE IN MARINE GRADE ENVIRONMENT.
7. ALL FEEDERS AND BRANCH CIRCUITS SHALL BE INSTALLED IN CONDUIT.
8. FLEXIBLE ALUMINUM CONDUITS MAY BE USED ABOVE HUNG CEILING AND IN WALLS IN LENGTHS AS REQUIRED. ALL METAL CONDUIT SHALL BE CORROSION RESISTANT ALUMINUM ELECTRIC METALLIC TUBING.
9. MINIMUM CONDUIT SIZE SHALL BE 3/4" UNLESS OTHERWISE NOTED.
10. ALL INTERIOR EXPOSED CONDUITS SHALL BE RIGID ALUMINUM.
11. ALL EXTERIOR EXPOSED CONDUITS SHALL BE STAINLESS STEEL.
12. ALL UNDERGROUND CONDUITS SHALL BE PVC.
13. ALL OUTLET BOXES SHALL BE 4" SQUARE STAINLESS STEEL, MINIMUM 1 1/2" DEEP WITH STAINLESS STEEL FLAT COVERS.
14. EACH CIRCUIT SHALL HAVE AN EQUIPMENT GROUNDING CONDUCTOR AND MULTI-WIRE CIRCUITS OF DIFFERENT PHASES MAY SHARE EQUIPMENT GROUND CONDUCTOR. EQUIPMENT GROUND CONDUCTOR SIZE SHALL NOT BE LESS THAN #12 AWG OR AS INDICATED ON THE DRAWINGS.
15. ALL CONDUCTORS #10 AND SMALLER SHALL BE SOLID TINNED COPPER AND ALL CONDUCTORS #8 AND LARGER SHALL BE STRANDED TINNED COPPER USING BOLTED LUGS AT TERMINALS.
16. ALL WIRING DEVICES SHALL BE INSTALLED PLUMB, SQUARE AND TRUE; AND ALL DEVICES INSTALLED AT A SINGLE LOCATION SHALL BE ALIGNED.
17. MINIMUM WIRE SIZE SHALL BE #12 AWG UNLESS OTHERWISE SPECIFIED.
18. ALL ELECTRICAL WORK SHALL BE PERFORMED IN COMPLIANCE WITH THE NATIONAL ELECTRICAL CODE AND ALL APPLICABLE CODES, REGULATIONS AND GOVERNMENT STANDARDS.
19. THE ELECTRICAL CONTRACTOR SHALL BE RESPONSIBLE FOR MARKING ALL SWITCHES, RECEPTACLES AND FIXED EQUIPMENT WITH THE BRANCH CIRCUIT PANEL NAME AND NUMBER SERVING EACH DEVICE.
20. ALL CONDUIT SHALL BE INSTALLED AS HIGH AS POSSIBLE (MOUNT TO BOTTOM OF STRUCTURE) TO AVOID CONFLICTS WITH DUCTWORK AND PIPING. THE ELECTRICAL CONTRACTOR SHALL COORDINATE INSTALLATION WITH THE MECHANICAL CONTRACTOR.
21. ON THREE PHASE, FOUR WIRE SYSTEM DO NOT USE A COMMON NEUTRAL FOR MORE THAN THREE CIRCUITS. MORE THAN THREE CIRCUITS IN ANY ONE CONDUIT IS NOT ALLOWED WITHOUT WRITTEN PERMISSION FROM THE ENGINEER.
22. ON SINGLE PHASE, THREE WIRE SYSTEMS, DO NOT USE A COMMON NEUTRAL FOR MORE THAN TWO CIRCUITS. MORE THAN TWO CIRCUITS IN ANY ONE CONDUIT IS NOT ALLOWED WITHOUT PERMISSION FROM THE ENGINEER.
23. WHEN THE FLOOR BELOW THE AREA OF CONSTRUCTION IS OCCUPIED, THE CONTRACTOR SHALL PRICE FLOOR SLAB PENETRATION AND/OR CORING ON AN OVERTIME BASIS.
24. CONTRACTOR SHALL FIELD VERIFY EXISTING CONDITIONS OF ELECTRICAL DEVICES, EQUIPMENT, WIRE, CONDUITS AND COORDINATE ANY DISCREPANCIES WITH ENGINEER PRIOR TO PRICING THE PROJECT. AFTER REMOVAL OF CEILING, NOTIFY ENGINEER OF ANY UNFORESEEN REQUIREMENTS NOT SHOWN ON THE PLANS. CONTRACTOR SHALL BRING UP TO NEC CODE ANY EXISTING INSTALLATION ABOVE CEILING THAT IS CURRENTLY IN VIOLATION OF THE CODE.
25. FURNITURE, IF SHOWN, IS FOR REFERENCE ONLY.
26. VERIFY ALL EQUIPMENT POWER REQUIREMENTS AND REQUIRED OUTLET TYPE WITH EQUIPMENT MANUFACTURER PRIOR ROUGH-IN.
27. FOR OUTLET AND SWITCH COVER PLATE , VERIFY TYPE AND FINISH WITH THE ARCHITECT PRIOR TO ORDERING MATERIALS.
28. FURNISH AND INSTALL UNDERWRITERS LABORATORIES, INC. (UL) LABELED DEVICES THROUGHOUT.
29. INDICATED DIMENSIONS ARE TO THE CENTER OF THE COVER PLATE OR MONUMENT; CLUSTERS OF OUTLETS ARE DIMENSIONED TO THE CENTER OF THE CLUSTER. U.O.N.; GANG COVER PLATES SHALL BE ONE-PIECE TYPE, U.O.N.
30. FOR LOCATION OF MOTORS AND EQUIPMENT REFER TO MECHANICAL, FIRE PROTECTION AND PLUMBING DRAWINGS. COORDINATE ACTUAL LOCATIONS IN THE FIELD.
31. FURNISH, INSTALL & SIZE PULL BOXES WITH BARRIERS WHEN APPROPRIATE TO SUIT FIELD CONDITIONS AND APPLICABLE CODES. PULL BOXES SHALL NOT BE INSTALLED ABOVE INACCESSIBLE CEILINGS, AND THEIR LOCATIONS SHOULD BE COORDINATED WITH OTHER TRADES.
32. USE #10 AWG MINIMUM WIRE FOR ALL 120V, 15A OR 20A CIRCUIT HOMERUNS OVER 75 FEET LONG AND FOR ALL 277V, 20A CIRCUIT HOMERUNS OVER 200 FEET LONG.
33. FIRE STOP ALL RATED WALL AND SLAB PENETRATIONS TO MAINTAIN REQUIRED FIRE RATING.
34. THESE DRAWINGS ARE DIAGRAMMATIC IN NATURE. THE CONTRACTOR SHALL FOLLOW ITS INTENT AS CLOSE AS POSSIBLE. THE ROUTING OF CONDUITS AND THE PLACEMENT OF ANY ELECTRICAL DEVICE/EQUIPMENT ON WALLS OR ON FLOORS SHALL BE COORDINATED WITH FIELD CONDITIONS.
35. ALL OUTLETS TO BE GFCI PROTECTED.
36. ALL OUTLETS TO BE 18" ABOVE FINISH FLOOR UNLESS OTHERWISE NOTED.
37. WALL MOUNTED DEVICES OR GROUPINGS OF DEVICES INDICATED (ON PLAN) BETWEEN EQUIPMENT, CASEWORK OR A PERPENDICULAR WALL SHALL BE CENTERED ON THE PORTION OF WALL BETWEEN UNLESS OTHERWISE NOTED.
38. WALL MOUNTED DEVICES OR GROUPINGS OF DEVICES INDICATED (ON PLAN) ON A COLUMN FACE OR SHORT WALL (LESS THAN 4 FEET AND WITHOUT COUNTER, SINK OR CASEWORK) SHALL BE CENTERED ON THE WALL UNLESS OTHERWISE NOTED.
39. WALL MOUNTED DEVICES OR GROUPINGS OF DEVICES INDICATED (ON PLAN) AT A CORNER SHALL MAINTAIN A 10" MINIMUM, 16" MAXIMUM CLEARANCE FROM THE CORNER UNLESS DEVICE IS ABOVE A COUNTER OR SINK LOCATED IN THE CORNER. THEN MAINTAIN A 6" MINIMUM CLEARANCE.
40. WALL MOUNTED DEVICES OR GROUPINGS OF DEVICES INDICATED (ON PLAN) TO BE UNDER (RAISED) EQUIPMENT SHALL BE CENTERED ON THE EQUIPMENT UNLESS OTHERWISE NOTED.
41. WALL MOUNTED DEVICES OR GROUPINGS OF DEVICES INDICATED (ON PLAN) BETWEEN 2 DOORS OR WALL OPENINGS OR BETWEEN DOORS OR WALL OPENINGS AND A COLUMN OR PERPENDICULAR WALL SHALL BE CENTERED ON THE AVAILABLE WALL SPACE UNLESS OTHERWISE NOTED.
42. WALL MOUNTED DEVICES INDICATED (ON PLAN) SIDE BY SIDE WITH THE SAME ABOVE FINISH FLOOR DIMENSION SHALL MAINTAIN A MINIMUM SIDE (BETWEEN) SEPARATION OF 2".
43. ELECTRICAL, DATA AND SERVICE OUTLETS FOR ADJACENT ROOMS SHALL BE POSITIONED 2'-0" APART MINIMUM AND IN SEPARATE STUD SPACES, UNLESS OTHERWISE NOTED.
44. WALL MOUNTED DEVICES OR GROUPINGS OF DEVICES INDICATED (ON PLAN) SIDE BY SIDE WITH DIFFERENT ABOVE FINISH FLOOR DIMENSIONS SHALL BE VERTICALLY CENTER ALIGNED UNLESS OTHERWISE NOTED.
45. WHEN VERTICAL ALIGNMENT OCCURS IMMEDIATELY ADJACENT TO A DOOR/ WALL/ COLUMN OR ANOTHER DEVICE, MAINTAIN THE MINIMUM SEPARATIONS BY DEVIATING THE VERTICAL CENTER ALIGNMENT.
46. WALL MOUNTED DEVICES OR GROUPINGS OF DEVICES INDICATED (ON PLAN) TO BE UNDER CASEWORK SHALL BE CENTERED ON THAT CASEWORK UNLESS OTHERWISE NOTED.
47. WALL MOUNTED DEVICES OR GROUPINGS OF DEVICES INDICATED (ON PLAN) ON THE SAME WALL SHALL BE EQUALLY SPACED ALONG THAT WALL. A WALL SHALL BE CONSIDERED CONTINUOUS UNTIL INTERRUPTED BY CASEWORK OR EQUIPMENT. ALL ADJACENCIES SHALL STILL APPLY.
48. MULTIPLE WALL MOUNTED DEVICES INDICATED (ON PLAN) ON A SHORT (LESS THAN AVAILABLE SPACE) BE GROUPED TOGETHER MAINTAINING MINIMUM SIDE (BETWEEN) SEPARATIONS UNLESS OTHERWISE NOTED.
49. IF BY APPLICATION OF ANY OF THESE DIMENSIONAL GUIDES A DEVICE IS PLACED UNINTENTIONALLY BEHIND DOOR, EQUIPMENT OR CASEWORK, RENDERING THE DEVICE INOPERABLE, THE ARCHITECT SHALL BE NOTIFIED TO CONFIRM THE RELOCATION.

GENERAL DEMOLITION NOTES:

1. THE CONTRACTOR SHALL BE RESPONSIBLE FOR ALL DEMOLITION IN AREAS OF RENOVATION. ALL WIRING DEVICES, LIGHT FIXTURES, WIRE, AND CONDUIT THAT IS TO BE REMOVED SHALL BE STORED, AS DIRECTED BY THE OWNER OR RELOCATED AS SHOWN ON THE NEW FLOOR PLAN, APPROPRIATE MEASURES SHALL BE TAKEN TO ASSURE CONTINUITY OF EXISTING CIRCUITS WHERE REQUIRED, AND ALL OUTAGES WHICH MAY RESULT SHALL BE COORDINATED WITH THE OWNER PRIOR TO THE WORK.
2. INCLUDE THE FURNISHING OF ALL MATERIALS, CUTTING, EXTENSIONS, CONNECTIONS, REPAIRING, ADAPTING, AND OTHER WORK INCIDENTAL THERETO, TOGETHER WITH SUCH TEMPORARY CONNECTIONS AS MAY REQUIRED PENDING COMPLETION OF THE PERMANENT WORK.
3. INCLUDE THE REMOVAL OF MATERIALS, AS DIRECTED, WHICH MAY INTERFERE WITH THE INSTALLATIONS.
4. LEAVE WORK IN GOOD CONDITION EQUAL TO THE ADJACENT NEW OR EXISTING WORK. PROVIDE ANY WORK NOT SHOWN ON THE DRAWINGS OR MENTIONED IN THE SPECIFICATION BUT CONSIDERED NECESSARY FOR THE COMPLETION OF THE WORK UNDER THIS SECTION WITHOUT ADDITIONAL CHARGE.
5. THE WORK OF TAKING DOWN AND REMOVING ANY PART OF EXISTING EQUIPMENT, OF MAKING ALTERATIONS OR OF PREPARING FOR AND REPLACING NEW WORK THEREIN TO BE DONE ONLY AFTER PERMISSION HAS BEEN OBTAINED BY THE ARCHITECT AND OWNER.
6. DISCONNECT, REMOVE, AND/OR RELOCATE ELECTRICAL MATERIAL, EQUIPMENT, DEVICES, COMPONENTS, AND OTHER WORK NOTED AND REQUIRED BY DEMOLITION OR ALTERATIONS IN EXISTING CONSTRUCTION.
7. TAPE BOTH ENDS OF ABANDONED CONDUCTOR, AND CAP OUTLETS AND ABANDONED RACEWAYS.
8. CUT AND CAP ABANDONED FLOOR RACEWAYS FLUSH WITH CONCRETE FLOOR OR BEHIND WALLS AND CEILINGS.
9. DISPOSE OF REMOVED RACEWAYS, ELECTRICAL DEVICES AND WIRING.
10. INTERRUPT ALARM AND EMERGENCY SYSTEMS ONLY WITH WRITTEN CONSENT OF THE OWNER.
11. ELECTRICAL SHUTDOWNS ARE TO BE COORDINATED BETWEEN THE GENERAL CONTRACTOR AND THE OWNER. ELECTRICAL CONTRACTOR TO MAKE ALLOWANCE FOR OVERTIME TO ACCOMPLISH SHUTDOWNS AND RECONNECTIONS DURING THIS PHASE OF THE WORK.
12. THE CONTRACTOR SHALL COORDINATE WITH THE OWNER AS TO CONSTRUCTION SCHEDULING, SERVICE INTERRUPTIONS AND ACCESS TO WORK AREAS.
13. ALL SALVAGEABLE ITEMS SUCH AS LIGHT FIXTURES, ETC THAT ARE NOT TO BE REUSED SHALL BE TURNED OVER TO THE OWNER UNLESS OTHERWISE NOTED.
14. THE LOCATION OF EXISTING DEVICES INDICATED ON THE DRAWINGS ARE APPROXIMATE AND SHALL BE FIELD VERIFIED BY THE CONTRACTOR.

GENERAL CONSTRUCTION NOTES:

1. THE INTENT OF THE CONTRACT DOCUMENTS IS TO ALLOW FOR THE PERFORMANCE OF THE WORK. EVERY ITEM NECESSARILY REQUIRED MAY NOT BE SPECIFICALLY MENTIONED OR SHOWN. UNLESS EXPRESSLY STATED, ALL SYSTEMS AND EQUIPMENT SHALL BE COMPLETED AND APPROPRIATELY OPERABLE. FURNISH AND INSTALL ALL SPECIFIED AND APPROPRIATED ITEMS, AND ALL INCIDENTAL, ACCESSORY, AND OTHER ITEMS NOT SPECIFIED BUT REQUIRED FOR A COMPLETE AND FINISHED
2. NO WORK DEFECTIVE IN WORKMANSHIP OR QUALITY OR DEFICIENT IN ANY REQUIREMENTS OF THE CONTRACT DOCUMENTS WILL BE ACCEPTABLE DESPITE THE ARCHITECT'S FAILURE TO DISCOVER OR POINT OUT DEFECTS OR DEFICIENCIES DURING CONSTRUCTION. DEFECTIVE WORK REVEALED WITHIN THE TIME REQUIRED BY GUARANTEES SHALL BE REPLACED BY WORK CONFORMING WITH THE INTENT OF THE CONTRACT. NO PAYMENT, EITHER PARTIAL OR FINAL, SHALL BE CONSTRUED AS AN ACCEPTANCE OR DEFECTIVE WORK OR IMPROPER MATERIALS.
3. PATCH AND REPAIR ALL FIREPROOFING DAMAGE INCURRED DURING DEMOLITION AND/OR CONSTRUCTION. FIREPROOF AS REQUIRED BY CODE ALL NEW PENETRATIONS GENERATED BY THE WORK DESCRIBED IN THESE DOCUMENTS.
4. DURING THE COURSE OF CONSTRUCTION, ACTUAL LOCATIONS OF CONSTRUCTION ITEMS DENOTED IN THE CONSTRUCTION DOCUMENTS SHALL BE INDICATED TO SCALE, IN CONTRASTING INK ON THE DRAWINGS FOR ALL RUNS OF MECHANICAL, SPRINKLER, PLUMBING, AND ELECTRICAL WORK, INCLUDING SITE UTILITIES AND CONCEALED DEVIATIONS FROM THE DRAWINGS. UPON COMPLETION OF THE PROJECT THE ENGINEER WILL PROVIDE THE CONTRACTOR WITH A REPRODUCIBLE SET OF ORIGINAL DOCUMENTS FOR "AS-BUILT" DOCUMENTATION. THIS SET SHALL BE CONSPICUOUSLY MARKED "AS-BUILTS" AND DELIVERED TO THE ARCHITECT.
5. THROUGHOUT THE DURATION OF THE PROJECT REFRAIN FROM ACTIONS THAT COULD LEAD TO THE FILING OF CLAIMS OF LIEN BY SUBCONTRACTORS, SUPPLIERS OF MATERIALS, LABOR, SERVICE EQUIPMENT, OR ANY OTHER INDIVIDUAL OR COMPANY SO ENTITTLED UNDER GOVERNING LAWS AND REGULATIONS UNLESS REASONABLE AND JUSTIFIABLE CAUSE CAN BE SHOWN. APPROVAL FOR PAYMENT SHALL BE CONTINGENT UPON THE CONTRACTOR'S OBTAINING AND FURNISHING TO THE ARCHITECT SIGNED RELEASES FROM SUCH INDIVIDUALS OR COMPANIES.
6. THE CONTRACTOR IS RESPONSIBLE FOR CHECKING CONTRACT DOCUMENTS, FIELD CONDITIONS, AND DIMENSIONS FOR ACCURACY AND CONFIRMING THAT WORK IS BUILDABLE AS SHOWN BEFORE PROCEEDING WITH CONSTRUCTION. IF THERE ARE ANY QUESTIONS REGARDING THESE OR OTHER COORDINATION ISSUES, THE CONTRACTOR SHALL SUBMIT THEM, IN WRITING, TO THE ENGINEER AND IS RESPONSIBLE FOR OBTAINING A WRITTEN CLARIFICATION FROM THE ARCHITECT BEFORE PROCEEDING WITH WORK IN QUESTION, OR RELATED WORK.
7. EXECUTE WORK IN ACCORDANCE WITH ANY AND ALL APPLICABLE LOCAL, STATE, FEDERAL CODES, MANUFACTURER'S RECOMMENDATIONS, TRADE AND REFERENCE STANDARDS INCLUDING BUT NOT LIMITED TO: UBC, SEISMIC CODES, NEC, NFPA, ASMC, UMC, LATEST ENFORCED EDITIONS.
8. DO NOT SCALE DRAWINGS; DIMENSIONS SHALL GOVERN, DETAILS SHALL GOVERN OVER PLANS AND ELEVATION. LARGE SCALE DETAILS SHALL GOVERN OVER SMALL SCALE DETAILS. WRITTEN SPECIFICATIONS SHALL GOVERN OVER ALL.
9. CLARIFY ALL DISCREPANCIES RELATIVE TO CONSTRUCTION DOCUMENTS, SPECIFICATIONS, AND FIELD CONDITIONS PRIOR TO SUBMITTING BIDS AND COMMENCING WORK.
10. THERE SHALL BE NO SUBSTITUTION OF MATERIALS WHERE A MANUFACTURER IS SPECIFIED, WHERE THE TERM "OR EQUAL" IS USED, THE ENGINEER OR ARCHITECT ALONE SHALL DETERMINE EQUALITY BASED UPON INFORMATION SUBMITTED BY THE CONTRACTOR.
11. THE CONTRACTOR SHALL BE RESPONSIBLE FOR THE DISTRIBUTION OF DRAWINGS TO ALL TRADES UNDER HIS JURISDICTION.
12. DO NOT PROCEED WITH ANY WORK REQUIRING ADDITIONAL COMPENSATION BEYOND THE CONTRACT AMOUNT WITHOUT WRITTEN AUTHORIZATION FROM THE OWNER VIA THE ARCHITECT. FAILURE TO OBTAIN AUTHORIZATION SHALL INVALIDATE ANY CLAIM FOR EXTRA COMPENSATION.
13. UPON NOTIFICATION OF COMPLETION OF THE WORK AND DELIVERY OF THE CONTRACTOR'S PUNCH-LIST, THE ENGINEER SHALL PREPARE A PUNCH- LIST OF CORRECTIONS, UNSATISFACTORY AND/OR INCOMPLETE WORK. FINAL PAYMENT WILL BE CONTINGENT UPON THE COMPLETION OF THESE ITEMS UNDER THE TERMS OF THE OWNER/CONTRACTOR AGREEMENT.
14. ALL MATERIALS SHALL BE NEW, UNUSED, AND OF THE HIGHEST QUALITY IN EVERY RESPECT UNLESS OTHERWISE NOTED. MANUFACTURED MATERIALS AND EQUIPMENT SHALL BE INSTALLED AS PER MANUFACTURER'S RECOMMENDATIONS AND INSTRUCTIONS, U.O.N.
15. COORDINATE ALL WORK WITH BUILDING OWNER SO AS NOT TO DISTURB OR CAUSE DAMAGE TO ANY OCCUPANTS IN THE BUILDING. AVOID CONFLICT AND INTERFERENCE WITH NORMAL BUILDING OPERATIONS BY COMPLYING WITH THE BUILDING'S REGULATIONS REGARDING SCHEDULING AND USE OF ELEVATORS AND LOADING DOCKS FOR DELIVERIES, HANDLING OF MATERIALS, EQUIPMENT, AND DEBRIS.
16. VERIFY IN THE FIELD, THAT NO CONFLICTS EXIST WHICH WOULD PROHIBIT THE LOCATION OF ANY AND ALL MECHANICAL, TELEPHONE, ELECTRICAL, LIGHTING, PLUMBING, AND SPRINKLER EQUIPMENT (TO INCLUDE ALL REQUIRED PIPING, DUCTWORK, AND CONDUIT) AND THAT ALL REQUIRED CLEARANCES FOR INSTALLATION AND MAINTENANCE OF ABOVE EQUIPMENTS ARE PROVIDED.
17. PROVIDE PROTECTION TO ALL EXISTING FINISHES IN ALL SPACES WITHIN OR ADJACENT TO THE SCOPE OF WORK AND THE OCCUPANT'S SPACE. THE CONTRACTOR SHALL PATCH AND REPAIR ANY DAMAGE CAUSED BY HIM OR HIS SUBCONTRACTORS, REFINISH TO MATCH EXISTING ADJACENT FINISH, OR AS NOTED HEREIN.
18. CORRECT PROTECTION TO ALL EXISTING FINISHES IN ALL SPACES WITHIN OR ADJACENT TO THE SCOPE OF WORK. THIS INCLUDES BUT IS NOT LIMITED TO UNEVEN SURFACES AND FINISHES AT GYPSUM BOARD OF DAMAGED FIREPROOFING, PATCH AND REPAIR SURFACES TO MATCH ADJACENT, ADJOINING SURFACES.
19. "TYPICAL" OR "TYP." MEANS IDENTICAL FOR ALL SIMILAR CONDITIONS U.O.N.
20. "SIMILAR" OR "SIM." MEANS COMPARABLE CHARACTERISTICS TO THE CONDITION NOTED. VERIFY DIMENSIONS AND ORIENTATION ON PLAN.
21. "VERIFY" OR "VER." MEANS TO ASCERTAIN AND CONFIRM APPLICATION WITH ARCHITECT OR ENGINEER.
22. PROVIDE STRICT CONTROL OF JOB CLEANING AND PREVENT DUST AND DEBRIS FROM EMANATING FROM CONSTRUCTION AREA.
23. CONTRACTOR SHALL BE RESPONSIBLE FOR SCHEDULING OF ACCESS INTO ADJACENT OCCUPANT SPACES WITH THE BUILDING MANAGEMENT AS REQUIRED FOR PRICING.
24. CONTRACTOR SHALL THOROUGHLY EXAMINE THE PREMISES AND SHALL BASE HIS BID ON THE EXISTING CONDITIONS, NOTWITHSTANDING ANY INFORMATION SHOWN OR NOT INDICATED ON THE CONTRACT DOCUMENTS.
25. ALL CONTRACT DOCUMENTS ARE COMPLEMENTARY AND WHAT IS CALLED FOR BY ANY WILL BE AS BINDING AS IF CALLED FOR BY ALL. ALL WORK SHOWN OR REFERRED TO ON ANY CONTRACT DOCUMENT SHALL BE PROVIDED AS THOUGH THEY ARE ON ALL RELATED DOCUMENTS.
26. DRAWINGS OF LARGER SCALE CLARIFY DRAWINGS OF SMALLER SCALE. IT SHALL BE THE RESPONSIBILITY OF THE CONTRACTOR TO NOTIFY THE ARCHITECT OF ANY CONFLICTS HEREIN - EITHER APPARENT OR OBVIOUS - PRIOR TO THE START OF NEW WORK ON THAT ITEM OR BEAR THE RESPONSIBILITY OF CORRECTING SUCH WORK AS DIRECTED BY THE ENGINEER VIA ARCHITECT.
27. ALL DRAWINGS AND WRITTEN MATERIAL HEREIN CONSTITUTE THE ORIGINAL AND UNPUBLISHED WORK OF THE ARCHITECT, AND THE SAME MAY NOT BE DUPLICATED, USED, OR DISCLOSED WITHOUT THE WRITTEN CONSENT TO THE ENGINEER.
28. THE ENGINEER HAS NO KNOWLEDGE OF AND SHALL NOT BE HELD LIABLE FOR ANY ASBESTOS OR OTHER HAZARDOUS MATERIALS ON THE JOB SITE. IF ASBESTOS OR OTHER HAZARDOUS MATERIALS ARE DISCOVERED DURING CONSTRUCTION, OR DEMOLITION, STOP WORK AND CONTACT OWNER FOR FURTHER INSTRUCTIONS BEFORE PROCEEDING.

Key Plan

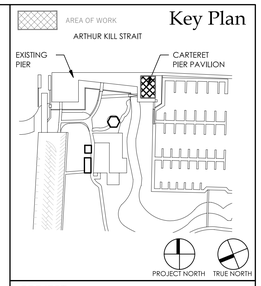

PROJECT

CARTERET PIER PAVILION

WATERFRONT PARK
200 MIDDLESEX AVENUE BLOCK 201 LOT 4
CARTERET, NEW JERSEY 07008

GEOTECHNICAL & STRUCTURAL ENGINEER

McLaren Technical Services, Inc.
Woodcliff Lake, New Jersey 07677
201.775.6000 | www.mgmclaren.com

MEP ENGINEER

KeRi ENGINEERING PC
911 Springfield Rd, Suite 2
Union, NJ 07083
T : 973.866.KeRi (5374)
F : 973.866.5370
W : keriengineering.com

CIVIL ENGINEER

1460 RT. 9 SOUTH
HOWELL, NEW JERSEY 07731
INFO@CMERGUAI.COM
732.462.7400

KITCHEN DESIGN CONSULTANT

44 ST. JOHN STREET
GOSHEN, NEW YORK
845.360.5112
INFO@WRADESIGNS.COM

DMR
ARCHITECTURE
PLANNING
ENGINEERING
INTERIORS
CONSULTING
www.dmrarchitects.com

MEMBERS OF THE AMERICAN INSTITUTE OF ARCHITECTS

LLOYD A. ROSENBERG	NJ - AI 05526
KURT A. VIERHEILIG	NJ - AI 17809
PRADEEP KAPOOR	NY - 042197
FERNANDO ROBLEDO	NY - 033804
JANET PINI	NJ - AI 02102900

NOT VALID FOR BUILDING UNLESS SIGNED AND SEALED BY ARCHITECT
777 Terrace Avenue, 6th Floor
Hasbrouck Heights, New Jersey 07604
Tel 201 - 288 - 2600 || Fax 201 - 288 - 2662

NCARB NATIONAL COUNCIL OF ARCHITECTURAL REGISTRATION BOARDS

CO - 306 184 CT - 05438 NJ - AI 05526
NJ-BOARD OF PROFESSIONAL PLANNERS) - LI 01584
NY - 013025-1 PA - RA - 13437-B

DWG TITLE :

ABBREVIATIONS, SYMBOLS & NOTES

SCALE As indicated

DATE	DESCRIPTION	DRN	CHK
06/28/2023	RELEASED FOR BID	LD	MP

REV.	DATE	DESCRIPTION

PROJECT NO. 5146

SHEET NO. E-001

Copyright © 2022 by DMR

PLOT DATE: 11/4/2022 3:33:09 PM

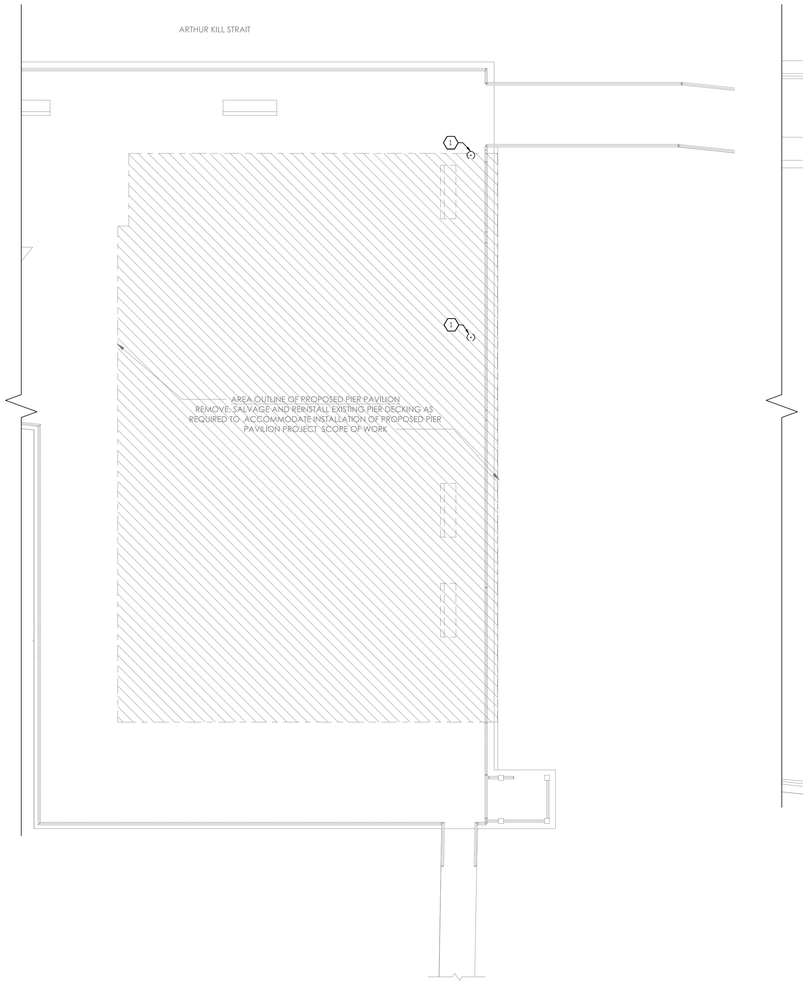

1 PIER ELECTRICAL LIGHTING PLAN - DEMOLITION WORK
SCALE: 1/8" = 1'-0"

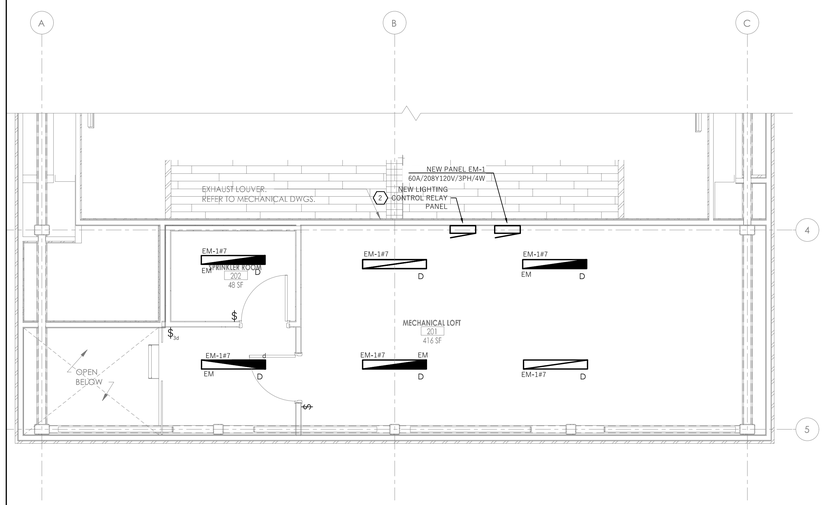

2 MECHANICAL LOFT ELECTRICAL LIGHTING PLAN - NEW WORK
SCALE: 1/4" = 1'-0"

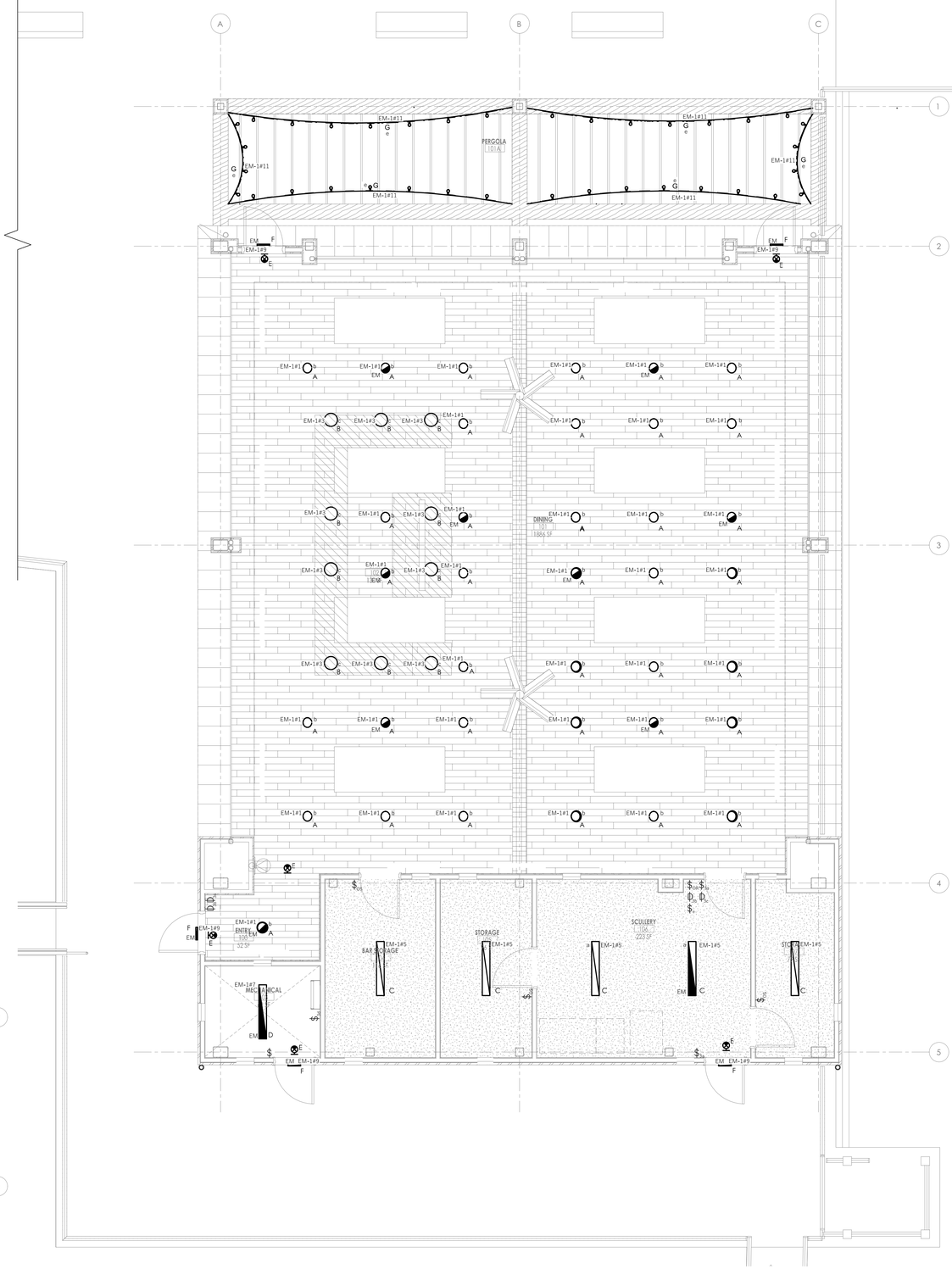

3 PAVILION ELECTRICAL LIGHTING PLAN - NEW WORK
SCALE: 1/4" = 1'-0"

GENERAL NOTES:

1. REFER TO DRAWING E-001 FOR ELECTRICAL SYMBOLS, ABBREVIATIONS AND NOTES.
2. CONTRACTOR SHALL BE RESPONSIBLE TO PROTECT THE AREA OF WORK FROM ANY DAMAGE, DUST AND DEBRIS. REFER
3. CONTRACTOR SHALL BE RESPONSIBLE TO PROTECT EXISTING DEVICES TO REMAIN DURING CONSTRUCTION.
4. CONTRACTOR SHALL FIELD VERIFY EXISTING CONDITIONS BEFORE PROCEEDING WITH ANY WORK.
5. CONTRACTOR SHALL COORDINATE WORK WITH OTHER TRADES.
6. FOR LIGHT FIXTURES TAGGED "EM", CONTRACTOR SHALL PROVIDE EMERGENCY INVERTER OR BATTERY BACKUP WITH MINIMUM 90 MINUTE BACKUP. REFER TO LIGHT FIXTURE SCHEDULE FOR ADDITIONAL INFORMATION.
7. CONTRACTOR SHALL PROVIDE UL924 RELAY FOR ALL EMERGENCY LIGHTING CIRCUITS.

SHEET NOTES:

1. EXISTING PIER LIGHT POLE TO BE DISCONNECTED AND REMOVED INCLUDING WIRING AND CONDUIT. LIGHT FIXTURE SHALL BE SALVAGED AND TURNED OVER TO MUNICIPALITY.
2. NEW LIGHTING CONTROL RELAY PANEL (INTERMATIC MODEL #ET91615CR) WITH INTEGRAL TIMECLOCK FOR CONTROL OF ALL LIGHTING CIRCUITS.

Key Plan

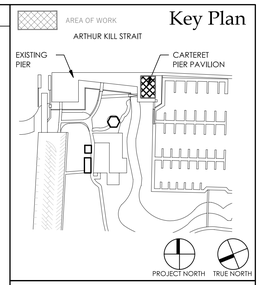

PROJECT
CARTERET PIER PAVILION

WATERFRONT PARK
200 MIDDLESEX AVENUE BLOCK 201 LOT 4
CARTERET, NEW JERSEY 07008

GEOTECHNICAL & STRUCTURAL ENGINEER

McLaren Technical Services, Inc.
Woodcliff Lake, New Jersey 07677
201.775.6000 | www.mgmclaren.com

MEP ENGINEER

KeRi ENGINEERING PC
911 Springfield Rd, Suite 2
Union, NJ 07083
T : 973.866.KeRi (5374)
F : 973.866.5370
W : keriengineering.com

CIVIL ENGINEER

1460 RT. 9 SOUTH
HOWELL, NEW JERSEY 07731
INFO@CMEUSA1.COM
732.462.7400

KITCHEN DESIGN CONSULTANT

44 ST. JOHN STREET
GOSHEN, NEW YORK
845.360.3112
INFO@RRADESIGNS.COM

DMR
ARCHITECTURE
PLANNING
ENGINEERING
INTERIORS
CONSULTING
www.dmrarchitects.com

MEMBERS OF THE AMERICAN INSTITUTE OF ARCHITECTS

LLOYD A. ROSENBERG	NJ - AI 05526
KURT A. VIERHBLIG	NJ - AI 17809
PRADEEP KAPOOR	NY - 042197
FERNANDO ROBLEDO	NY - 033804
JANET PINI	NJ - AI 02102900

NOT VALID FOR BIDDING UNLESS SIGNED AND SEALED BY ARCHITECT
777 Terrace Avenue, 6th Floor
Hasbrouck Heights, New Jersey 07604
Tel 201 - 288 - 2600 || Fax 201 - 288 - 2662

NCARB NATIONAL COUNCIL OF ARCHITECTURAL REGISTRATION BOARDS
CO - 306 184 CT - 05438 NJ - AI 05526
NJ BOARD OF PROFESSIONAL PLANNERS) - LI 01584
NY - 013025-1 PA - RA - 13437-B

DWG TITLE :
ELECTRICAL LIGHTING PLAN - DEMOLITION & NEW WORK

SCALE: As indicated

DATE	DESCRIPTION	DRN	CHK
06/26/2023	RELEASED FOR BID	LD	MP

REV.	DATE	DESCRIPTION		

PROJECT NO.	SHEET NO.
5146	E-101

Copyright © 2022 by DMR
PLOT DATE: 11/4/2022 3:33:09 PM

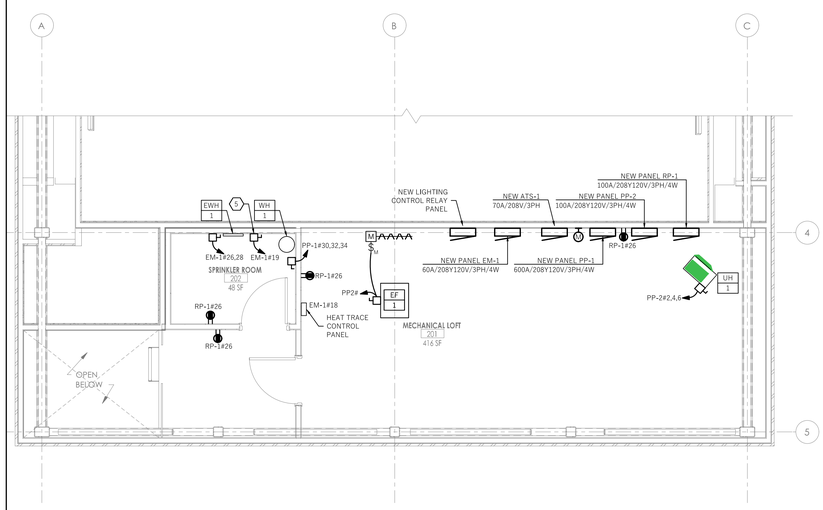

1 MECHANICAL LOFT ELECTRICAL POWER & SYSTEMS - NEW WORK

SCALE: 1/4" = 1'-0"

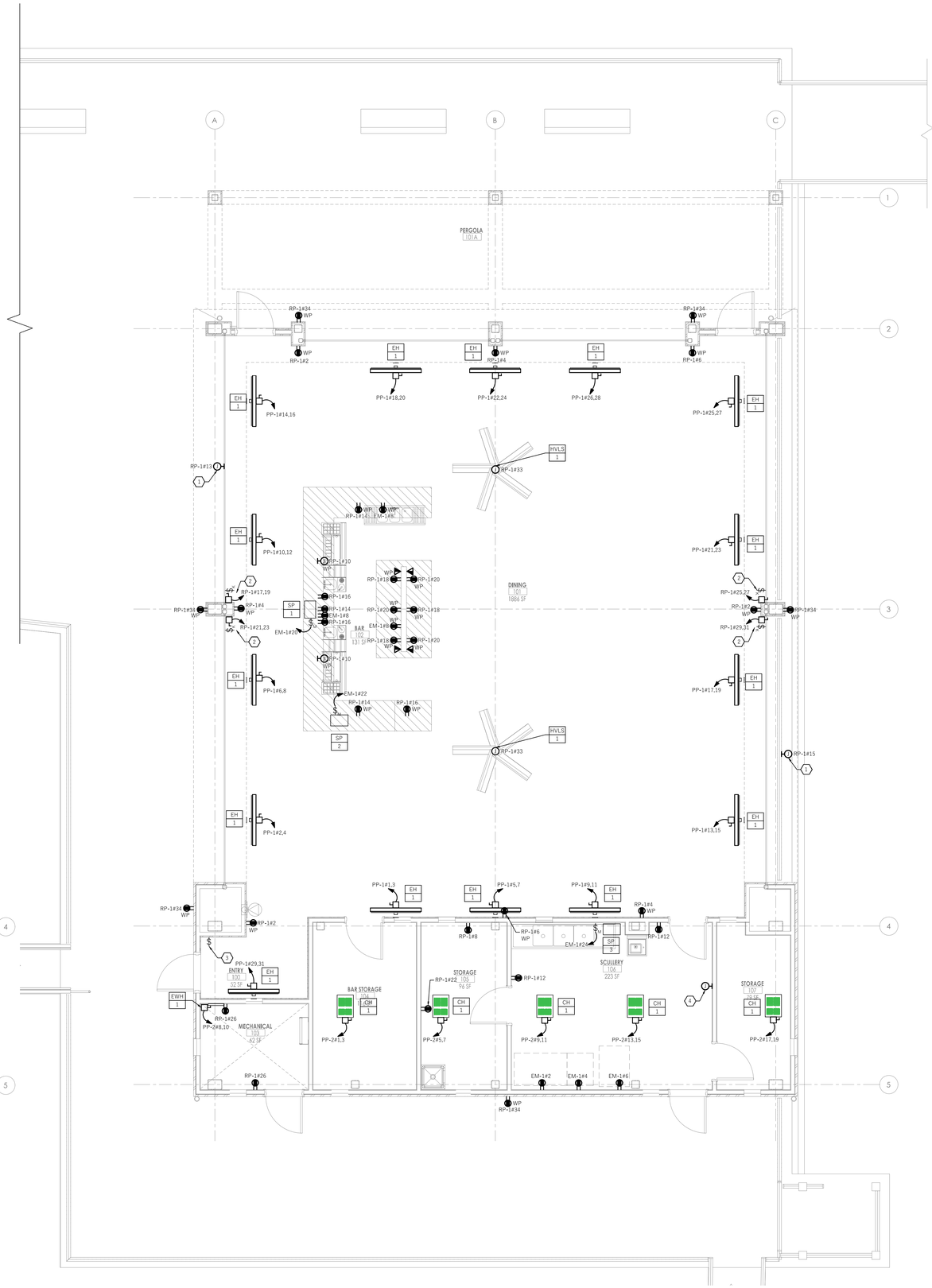

2 PAVILION ELECTRICAL POWER & SYSTEMS - NEW WORK

SCALE: 1/4" = 1'-0"

GENERAL NOTES:

1. REFER TO DRAWING E-001 FOR ELECTRICAL SYMBOLS, ABBREVIATIONS AND NOTES.
2. CONTRACTOR SHALL BE RESPONSIBLE TO PROTECT THE AREA OF WORK FROM ANY DAMAGE, DUST AND DEBRIS. REFER
3. CONTRACTOR SHALL BE RESPONSIBLE TO PROTECT EXISTING DEVICES TO REMAIN DURING CONSTRUCTION.
4. CONTRACTOR SHALL FIELD VERIFY EXISTING CONDITIONS BEFORE PROCEEDING WITH ANY WORK.
5. CONTRACTOR SHALL COORDINATE WORK WITH OTHER TRADES.
6. FOR LIGHTING FIXTURES TAGGED "EM", CONTRACTOR SHALL PROVIDE EMERGENCY BATTERY BACKUP WITH MINIMUM 90 MINUTE BACKUP.

SHEET NOTES:

1. JUNCTION BOX FOR POWER TO ELECTRONIC SIGNAGE.
2. DISCONNECT AND KEY SWITCH FOR OVERHEAD DOOR.
3. SWITCH FOR ELECTRONIC SIGNAGE.
4. JUNCTION BOX FOR CEILING FAN TOUCHSCREEN CONTROL.
5. DISCONNECT SWITCH FOR AIR COMPRESSOR.

Key Plan

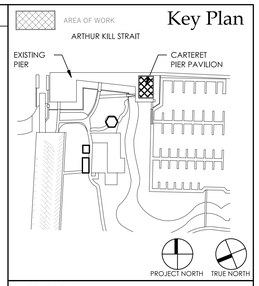

PROJECT

CARTERET PIER PAVILION

WATERFRONT PARK
200 MIDDLESEX AVENUE BLOCK 201 LOT 4
CARTERET, NEW JERSEY 07008

GEOTECHNICAL & STRUCTURAL ENGINEER

McLaren Technical Services, Inc.
Woodcliff Lake, New Jersey 07677
201.775.6000 | www.mgmclaren.com

MEP ENGINEER

KeRi ENGINEERING PC
911 Springfield Rd, Suite 2
Union, NJ 07083
T : 973.866.KeRi (5374)
F : 973.866.5370
W : keriengineering.com

CIVIL ENGINEER

1460 RT. 9 SOUTH
HOWELL, NEW JERSEY 07731
INFO@CMEUSA1.COM
732.462.7400

KITCHEN DESIGN CONSULTANT

44 ST. JOHN STREET
GOSHEN, NEW YORK
845.360.5112
INFO@WRADESIGNS.COM

DMR
ARCHITECTURE
PLANNING
ENGINEERING
INTERIORS
CONSULTING
www.dmrarchitects.com

MEMBERS OF THE AMERICAN INSTITUTE OF ARCHITECTS

LLOYD A. ROSENBERG	NJ - AI 05526
KURT A. VIERHEILIG	NJ - AI 17809
PRADEEP KAPOOR	NY - 042197
FERNANDO ROBLEDO	NY - 033804
JANET PINI	NJ - AI 02102900

NOT VALID FOR BIDDING UNLESS SIGNED AND SEALED BY ARCHITECT

777 Terrace Avenue, 6th Floor
Hasbrouck Heights, New Jersey 07604
Tel 201 - 288 - 2600 || Fax 201 - 288 - 2662

NCARB NATIONAL COUNCIL OF ARCHITECTURAL REGISTRATION BOARDS

CO - 306 184 CT - 05438 NJ - AI 05526
NJ-BOARD OF PROFESSIONAL PLANNERS) - LI 01584
NY - 013025-1 PA - RA - 13437-B

DWG TITLE :

ELECTRICAL POWER & SYSTEMS - NEW WORK

SCALE As indicated

DATE	DESCRIPTION	DRN	CHK
06/26/2023	RELEASED FOR BID	LD	MP

REV.	DATE	DESCRIPTION

PROJECT NO.	SHEET NO.
5146	E-102

Copyright © 2022 by DMR

PLOT DATE: 11/4/2022 3:33:09 PM

NEW PANEL BOARD PP-1

BUS AMPS:	600 AMP		LOCATION:	MECHANICAL RM 201	GROUND BUS:	COPPER	
MAIN SIZE/TYPE:	600 AMP/MCB		NEMA RATING:	4X	ISOL. GROUND BUS:	-	
VOLTS/PHASE:	120/ 208	3 PH / 4W	AFC VALUE:	65,000	FEED THRU LUGS:		
MOUNTING:	SURFACE		AIC RATING:	65,000	SECTIONS:	1	

CKT #	CIRCUIT DESCRIPTION	BREAKER AMPS	BREAKER POLES	WIRE SIZE	LOAD (VA)	CONNECTED LOAD PER PHASE (VA) A	B	C	LOAD (VA)	WIRE SIZE	BREAKER AMPS	BREAKER POLES	CIRCUIT DESCRIPTION	CKT #
1	EH-1	30	2	2#10+1#10G IN 3/4"C	2250	4500			2250	2#10+1#10G IN 3/4"C	30	2	EH-1	2
3	-	-	-	-	2250		4500		2250	-	-	-	-	4
5	EH-1	30	2	2#10+1#10G IN 3/4"C	2250			4500	2250	2#10+1#10G IN 3/4"C	30	2	EH-1	6
7	-	-	-	-	2250	4500			2250	-	-	-	-	8
9	EH-1	30	2	2#10+1#10G IN 3/4"C	2250		4500		2250	2#10+1#10G IN 3/4"C	30	2	EH-1	10
11	-	-	-	-	2250			4500	2250	-	-	-	-	12
13	EH-1	30	2	2#10+1#10G IN 3/4"C	2250	4500			2250	2#10+1#10G IN 3/4"C	30	2	EH-1	14
15	-	-	-	-	2250		4500		2250	-	-	-	-	16
17	EH-1	30	2	2#10+1#10G IN 3/4"C	2250			4500	2250	2#10+1#10G IN 3/4"C	30	2	EH-1	18
19	-	-	-	-	2250	4500			2250	-	-	-	-	20
21	EH-1	30	2	2#10+1#10G IN 3/4"C	2250		4500		2250	2#10+1#10G IN 3/4"C	30	2	EH-1	22
23	-	-	-	-	2250			4500	2250	-	-	-	-	24
25	EH-1	30	2	2#10+1#10G IN 3/4"C	2250	4500			2250	2#10+1#10G IN 3/4"C	30	2	EH-1	26
27	-	-	-	-	2250		4500		2250	-	-	-	-	28
29	EH-1	30	2	2#10+1#10G IN 3/4"C	2250			8250	6000	3#4+1#8G IN 1-1/4"C	70	3	WH-1	30
31	-	-	-	-	2250	8250			6000	-	-	-	-	32
33	SPARE	20	1				6000		6000	-	-	-	-	34
35	SPARE	20	1					0			20	1	SPARE	36
37	SPARE	20	1			0					20	1	SPARE	38
39	SPARE	20	1				0				20	1	SPARE	40
41	SPARE	20	1					0			20	1	SPARE	42
43	SPACE					5920			5920	4#6+1#10G IN 1"C	60	3	ATS-1 FOR PANEL EM-1	44
45	SPACE						2568		2568	-	-	-	-	46
47	SPACE							3688	3688	-	-	-	-	48
49	PANEL PP-2	100	3	4#2+1#8G IN 1-1/2"C	7167	15177			8010	4#2+1#8G IN 1-1/2"C	100	3	PANEL RP-1	50
51	-	-	-	-	6042		13362		7320	-	-	-	-	52
53	-	-	-	-	6318			9948	3630	-	-	-	-	54
				PER PHASE SUB-TOTALS		51847	44430	39886	LEGENDS:					

TOTAL CONNECTED PANELBOARD (VA)	136163
TOTAL CONNECTED PANELBOARD (AMPS)	378
TOTAL PANELBOARD DEMAND (VA)	1
TOTAL PANELBOARD DEMAND (AMPS)	378

NEW PANEL BOARD PP-2

BUS AMPS:	100 AMP		LOCATION:	MECHANICAL RM 201	GROUND BUS:	COPPER	
MAIN SIZE/TYPE:	100 AMP/MCB		NEMA RATING:	4X	ISOL. GROUND BUS:	-	
VOLTS/PHASE:	120/ 208	3 PH / 4W	AFC VALUE:	65,000	FEED THRU LUGS:		
MOUNTING:	SURFACE		AIC RATING:	65,000	SECTIONS:	1	

CKT #	CIRCUIT DESCRIPTION	BREAKER AMPS	BREAKER POLES	WIRE SIZE	LOAD (VA)	CONNECTED LOAD PER PHASE (VA) A	B	C	LOAD (VA)	WIRE SIZE	BREAKER AMPS	BREAKER POLES	CIRCUIT DESCRIPTION	CKT #
1	CH-1	20	2	2#10+1#10G IN 3/4"C	1125	2792			1667	3#10+1#10G IN 3/4"C	20	3	UH-1	2
3	-	-	-	-	1125		2792		1667	-	-	-	-	4
5	CH-1	20	2	2#10+1#10G IN 3/4"C	1125			2792	1667	-	-	-	-	6
7	-	-	-	-	1125	2125			1000	2#10+1#10G IN 3/4"C	20	2	EWH-1	8
9	CH-1	20	2	2#10+1#10G IN 3/4"C	1125		2125		1000	-	-	-	-	10
11	-	-	-	-	1125			2401	1276	2#10+1#10G IN 3/4"C	20	1	EF-1 & MOTORIZED DAMPER	12
13	CH-1	20	2	2#10+1#10G IN 3/4"C	1125	1125				-	20	1	SPARE	14
15	-	-	-	-	1125		1125			-	20	1	SPARE	16
17	CH-1	20	2	2#10+1#10G IN 3/4"C	1125			1125		-	20	1	SPARE	18
19	-	-	-	-	1125	1125				-	20	1	SPARE	20
21	SPARE	20	1				0			-	20	1	SPARE	22
23	SPARE	20	1					0			20	1	SPARE	24
25	SPACE	20	1			0					20	1	SPACE	26
27	SPACE	20	1				0				20	1	SPACE	28
29	SPACE	20	1					0			20	1	SPACE	30
				PER PHASE SUB-TOTALS		7167	6042	6318	LEGENDS:					

TOTAL CONNECTED PANELBOARD (VA)	19527
TOTAL CONNECTED PANELBOARD (AMPS)	54
TOTAL PANELBOARD DEMAND (VA)	1
TOTAL PANELBOARD DEMAND (AMPS)	54

NEW PANEL BOARD RP-1

BUS AMPS:	100 AMP		LOCATION:	MECHANICAL RM 201	GROUND BUS:	COPPER	
MAIN SIZE/TYPE:	100 AMP/MCB		NEMA RATING:	4X	ISOL. GROUND BUS:	-	
VOLTS/PHASE:	120/ 208	3 PH / 4W	AFC VALUE:	65,000	FEED THRU LUGS:		
MOUNTING:	SURFACE		AIC RATING:	65,000	SECTIONS:	1	

CKT #	CIRCUIT DESCRIPTION	BREAKER AMPS	BREAKER POLES	WIRE SIZE	LOAD (VA)	CONNECTED LOAD PER PHASE (VA) A	B	C	LOAD (VA)	WIRE SIZE	BREAKER AMPS	BREAKER POLES	CIRCUIT DESCRIPTION	CKT #
1	SPARE	20	1	-		540			540	2#10+1#10G IN 3/4"C	20	1	GFCI RECEPTACLES: RM-101	2
3	SPARE	20	1	-			540		540	2#10+1#10G IN 3/4"C	20	1	GFCI RECEPTACLES: RM-101	4
5	SPARE	20	1	-				360	360	2#10+1#10G IN 3/4"C	20	1	GFCI RECEPTACLES: RM-101	6
7	SPARE	20	1	-		1440			1440	2#10+1#10G IN 3/4"C	20	1	GFCI RECEPT : RM-105 - ITEM 9	8
9	SPARE	20	1	-			1000		1000	2#10+1#10G IN 3/4"C	20	1	J BOX : RM-102 - ITEM 13,15	10
11	SPARE	20	1	-				360	360	2#10+1#10G IN 3/4"C	20	1	GFCI RECEPTACLE: RM-106	12
13	ELECTRONIC SIGNAGE	20	1	2#10+1#10G IN 3/4"C	1500	2040			540	2#10+1#10G IN 3/4"C	20	1	GFCI RECEPT: RM-102	14
15	ELECTRONIC SIGNAGE	20	1	2#10+1#10G IN 3/4"C	1500		2040		540	2#10+1#10G IN 3/4"C	20	1	GFCI RECEPT: RM-102	16
17	OVERHEAD DOOR	20	2	2#10+1#10G IN 3/4"C	790			1330	540	2#10+1#10G IN 3/4"C	20	1	GFCI RECEPTACLES: RM-102	18
19	-	-	-	-	790	1330			540	2#10+1#10G IN 3/4"C	20	1	GFCI REC: RM-102	20
21	OVERHEAD DOOR	20	2	2#10+1#10G IN 3/4"C	790		970		180	2#10+1#10G IN 3/4"C	20	1	GFCI REC: RM-105	22
23	-	-	-	-	790			790		-	20	1	SPARE	24
25	OVERHEAD DOOR	20	2	2#10+1#10G IN 3/4"C	790	1870			1080	2#10+1#10G IN 3/4"C	20	1	GFCI REC: RM-201, RM-202, RM-103	26
27	-	-	-	-	790		1290		500	2#10+1#10G IN 3/4"C	20	1	GFCI RECEPTACLE: RM-106	28
29	OVERHEAD DOOR	20	2	2#10+1#10G IN 3/4"C	790			790			20	1	SPARE	30
31	-	-	-	-	790	790					20	1	SPARE	32
33	J.BOX - CEILING FANS HVLS-1	20	1	2#10+1#10G IN 3/4"C	400		1480		1080	2#10+1#10G IN 3/4"C	20	1	GFCI RECEPT : EXTERIOR	34
35	SPARE	20	1					0			20	1	SPARE	36
37	SPARE	20	1			0					20	1	SPARE	38
39	SPARE	20	1				0				20	1	SPARE	40
41	SPARE	20	1					0			20	1	SPARE	42
				PER PHASE SUB-TOTALS		8010	7320	3630	LEGENDS:					

TOTAL CONNECTED PANELBOARD (VA)	18960
TOTAL CONNECTED PANELBOARD (AMPS)	53
TOTAL PANELBOARD DEMAND (VA)	1
TOTAL PANELBOARD DEMAND (AMPS)	53

NEW PANEL BOARD EM-1

BUS AMPS:	100 AMP		LOCATION:	MECHANICAL RM 201	GROUND BUS:	COPPER	
MAIN SIZE/TYPE:	60 AMP/MCB		NEMA RATING:	4X	ISOL. GROUND BUS:	-	
VOLTS/PHASE:	120/ 208	3 PH / 4W	AFC VALUE:	65,000	FEED THRU LUGS:		
MOUNTING:	SURFACE		AIC RATING:	65,000	SECTIONS:	1	

CKT #	CIRCUIT DESCRIPTION	BREAKER AMPS	BREAKER POLES	WIRE SIZE	LOAD (VA)	CONNECTED LOAD PER PHASE (VA) A	B	C	LOAD (VA)	WIRE SIZE	BREAKER AMPS	BREAKER POLES	CIRCUIT DESCRIPTION	CKT #
1	LIGHTS:RM-100, 101, 102	20	1	2#10+1#10G IN 3/4"C	560	1988			1428	2#10+1#10G IN 3/4"C	20	1	GFCI RECPT: RM-106 - ITEM 1	2
3	LIGHTS:RM-102	20	1	2#10+1#10G IN 3/4"C	350		674		324	2#10+1#10G IN 3/4"C	20	1	GFCI RECPT: RM-106 - ITEM 2	4
5	LIGHTS:RM-103,104,105,106,107	20	1	2#10+1#10G IN 3/4"C	250			970	720	2#10+1#10G IN 3/4"C	20	1	GFCI RECPT: RM-106 - ITEM 3	6
7	LIGHTS:RM-201,202	20	1	2#10+1#10G IN 3/4"C	350	1142			792	2#10+1#10G IN 3/4"C	20	1	GFCI RECPT: RM-102 - ITEM 14,17,18	8
9	EXTERIOR LIGHTS	20	1	2#10+1#10G IN 3/4"C	180		180			-	20	1	SPARE	10
11	LIGHTS:RM-101A	20	1	2#10+1#10G IN 3/4"C	54			54		-	20	1	SPARE	12
13	SPARE	20	1	-		0				-	20	1	SPARE	14
15	SPARE	20	1	-			0			-	20	1	SPARE	16
17	SPARE	20	1	-				1800	1800	2#10+1#10G IN 3/4"C	20	1	HEAT TRACE CONTROL PANEL	18
19	AIR COMPRESSOR - SPRINKLER	20	1	2#10+1#10G IN 3/4"C	1176	2040			864	2#10+1#10G IN 3/4"C	20	1	SP-1	20
21	LIGHTING CONTROL RELAY PANEL	20	1	2#10+1#10G IN 3/4"C	100		964		864	2#10+1#10G IN 3/4"C	20	1	SP-2	22
23	SPARE	20	1	-				864	864	2#10+1#10G IN 3/4"C	20	1	SP-3	24
25	SPARE	20	1	-		750			750	2#10+1#10G IN 3/4"C	20	2	EWH-1	26
27	SPARE	20	1	-			750		750	-	-	-	-	28
29	SPARE	20	1	-				0		-	20	1	SPARE	30
				PER PHASE SUB-TOTALS		5920	2568	3688	LEGENDS:					

TOTAL CONNECTED PANELBOARD (VA)	12176
TOTAL CONNECTED PANELBOARD (AMPS)	34
TOTAL PANELBOARD DEMAND (VA)	1
TOTAL PANELBOARD DEMAND (AMPS)	34

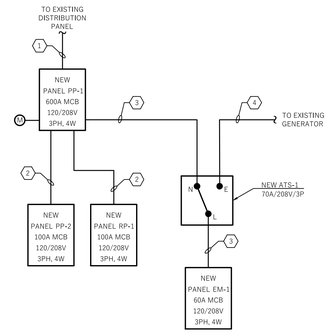

1 ELECTRICAL SINGLE LINE DIAGRAM

SCALE: N.T.S.

ATS SCHEDULE

ATS TAG	VOLTAGE	RATING	SHORT CIRCUIT RATING	NO OF POLES	ENCLOSURE	REMARK	CATALOG NUMBER	BASIS OF DESIGN
ATS#1	208V,3Ø,4W	70A	65KAIC	4	NEMA-1	OPEN TRANSITION TYPE	TX301	GENERAC TX SERIES

LIGHTING FIXTURE SCHEDULE

SYMBOL	LABEL	MANUFACTURER	CATALOG NUMBER	DESCRIPTION	WATTAGE	REMARKS
	A	BEGA	MM55844-K3-BLK	LED COMPACT RECESSED DOWNLIGHT ADJUSTABLE LIGHT DISTRIBUTION	20	PROVIDE EMERGENCY INVERTER (IOTA MODEL #IS-375) WITH MINIMUM 90 MINUTES BACK UP FOR FIXTURES TAGGED "EM"
	B	VISA LIGHTING	CP2124-CAP-L30K/H-MVOLT-DBL/PTD-FRST-TH-OAHXX	12" LED STEM SUSPENSION GLOBE LIGHT	17	-
	C	PEERLESS ELECTRIC	AP2W-4-60-40K-A4-LA-S-C1-1 20-MV	4' LED SURFACE MOUNTED LIGHT	50	PROVIDE BATTERY WITH MINIMUM 90 MINUTES BACK UP FOR FIXTURES TAGGED "EM"
	D	PEERLESS ELECTRIC	AP2W-4-60-40K-A4-LA-P-C1-1 20-MV	4' LED SUSPENDED LIGHT	50	PROVIDE BATTERY WITH MINIMUM 90 MINUTES BACK UP FOR FIXTURES TAGGED "EM"
	E	ISOLATE	HLX-EM-R-1-MB-SD	EXIT LIGHT	-	PROVIDE SELF DIAGNOSTICS FOR ALL EXIT SIGNS
	F	PERFORMANCE LIGHTING	M30-36-T3-AM-3K-UNV-0/10V -REM-PHCB	LED WALL MOUNT EXTERIOR LIGHT	36	PROVIDE BATTERY WITH MINIMUM 90 MINUTES BACK UP FOR FIXTURES TAGGED "EM". PROVIDE INTEGRAL PHOTOCELL BUTTON
	G	PRIMUS LIGHITNG	DSW-18-120V-S14/27/150-NA-TBK	LED SUSPENDED DECORATIVE STRINGLIGHT SYSTEM	1.5/LAMP	-

FEEDER SCHEDULE

FEEDER TAG	(QUANTITY) CONDUIT SIZE	(QUANTITY) CONDUCTOR SIZE	(QUANTITY) GROUND SIZE
1	(3) 4"C + (1) 4"C SPARE	(3) SETS OF 4#500	1#4/0
2	1-1/2" C	4#2	1#8
3	1" C	4#6	1#10
4	(1) 3"C + (1) 3"C SPARE	4#2/0	1#1

Key Plan

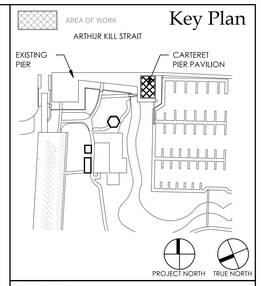

PROJECT

CARTERET PIER PAVILION

WATERFRONT PARK
200 MIDDLESEX AVENUE BLOCK 201 LOT 4
CARTERET, NEW JERSEY 07008

GEOTECHNICAL & STRUCTURAL ENGINEER

McLaren Technical Services, Inc.
Woodcliff Lake, New Jersey 07677
201.775.6000 | www.mgmclaren.com

MEP ENGINEER

KeRi ENGINEERING PC
911 Springfield Rd, Suite 2
Union, NJ 07083
T : 973.866.KeRi (5374)
F : 973.866.5370
W : keriengineering.com

CIVIL ENGINEER

1460 RT. 9 SOUTH
HOWELL, NEW JERSEY 07731
INFO@CMEUSA1.COM
732.462.7400

KITCHEN DESIGN CONSULTANT

44 ST. JOHN STREET
GOSHEN, NEW YORK
845.360.3112
INFO@RRADESIGNS.COM

DMR
ARCHITECTURE
PLANNING
ENGINEERING
INTERIORS
CONSULTING
www.dmrarchitects.com

MEMBERS OF THE AMERICAN INSTITUTE OF ARCHITECTS

LLOYD A. ROSENBERG	NJ - AI 05526
KURT A. VIERHEILIG	NJ - AI 17809
PRADEEP KAPOOR	NY - 042197
FERNANDO ROBLEDO	NY - 033804
JANET PINI	NJ - AI 02102900

NOT VALID FOR BIDDING UNLESS SIGNED AND SEALED BY ARCHITECT

777 Terrace Avenue, 6th Floor
Hasbrouck Heights, New Jersey 07604
Tel 201 - 288 - 2600 || Fax 201 - 288 - 2662

NCARB NATIONAL COUNCIL OF ARCHITECTURAL REGISTRATION BOARDS

CO - 306 184 CT - 05438 NJ - AI 05526
NJ-BOARD OF PROFESSIONAL PLANNERS) - LI 01584
NY - 013025-1 PA - RA - 13437-8

DWG TITLE :

ELECTRICAL SCHEDULES & SINGLE LINE DIAGRAM

SCALE As indicated

DATE	DESCRIPTION	DRN	CHK
06/28/2023	RELEASED FOR BID	LD	MP

REV.	DATE	DESCRIPTION

PROJECT NO.	SHEET NO.
5146	E-201

Copyright © 2022 by DMR

PLOT DATE: 11/4/2022 3:33:09 PM

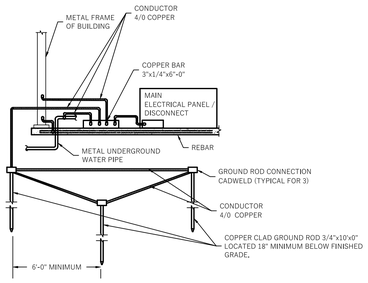

1 MAIN GROUND DETAIL
SCALE: N.T.S

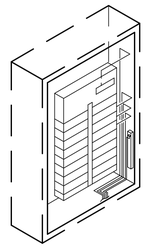

NOTES:

1. ALL BENDS IN CONDUCTORS #10 AND SMALLER, SHALL BE 90° STRAIGHT AND TRUE. BENDS IN LARGER SIZE CONDUCTORS SHALL HAVE A UNIFORM RADIUS.
2. BEND CONDUCTORS TOWARD THE BACK CORNERS OF THE PANEL CAN. BEND CONDUCTORS FORWARD TO CONNECT TO CIRCUIT BREAKERS.
3. TIE WRAP CONDUCTORS TO FORM NEAT AND ORDERLY BUNDLES. AVOID EXCESSIVE USE OF TIE WRAPS.
4. NO CONDUCTORS SHALL TOUCH PANEL CAN.
5. FINISHED PANEL SHALL PRESENT A CLEAN, SHARP AND ORDERLY APPEARANCE.

2 TYPICAL PANELBOARD WIRING
SCALE: NOT TO SCALE

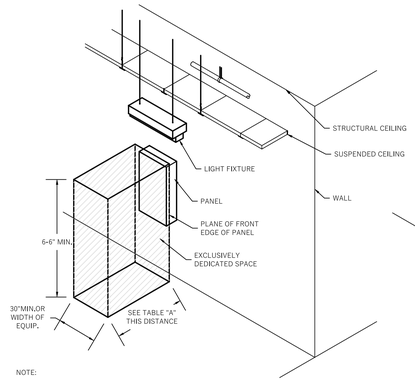

NOTE:

THIS FIGURE ILLUSTRATES THE WORKING SPACE IN FRONT OF THE PANELBOARD REQUIRED BY SECTION 110-16 OF THE NATIONAL ELECTRICAL CODE.

TABLE 110-26(A)(1) WORKING CLEARANCE			
VOLTAGE TO GROUND,NOMINAL	MINIMUM CLEAR DISTANCE (FEET) CONDITION:		
	1	2	3
0-150	3	3	3
151-600	3	3½	4

NOTE:
NO PIPING, DUCTS OR EQUIPMENT FOREIGN TO THE ELECTRICAL EQUIPMENT OR ARCHITECTURAL APPURTENANCES SHALL BE PERMITTED TO BE INSTALLED IN, ENTER OR PASS THROUGH THE DEDICATED SPACES SHOWN ABOVE.

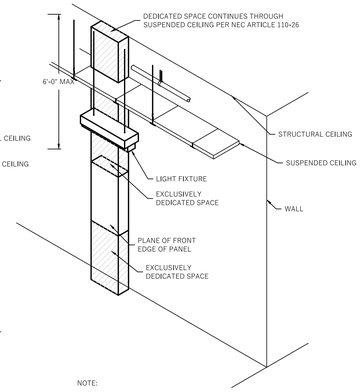

NOTE:

THIS FIGURE ILLUSTRATES THE ADDITIONAL EXCLUSIVELY DEDICATED SPACE REQUIRED OVER AND UNDER THE PANELBOARD FOR THE CABLES, RACEWAYS, ETC. TO AND FROM THE PANELBOARD REQUIRED BY SECTION 110-26 OF THE NATIONAL ELECTRICAL CODE.

WHERE THE "CONDITIONS" ARE AS FOLLOWS:

1. EXPOSED LIVE PARTS ON ONE SIDE AND NO LIVE OR GROUNDED PARTS ON THE OTHER SIDE OF THE WORKING SPACE, OR EXPOSED LIVE PARTS ON BOTH SIDES EFFECTIVELY GUARDED BY SUITABLE WOOD OR OTHER INSULATING MATERIALS, INSULATED WIRE OR INSULATE BUSBARS OPERATING AT NOT OVER 300 VOLTS SHALL NOT BE CONSIDERED LIVE PARTS.
2. EXPOSED LIVE PARTS ON ONE SIDE AND GROUNDED PARTS ON THE OTHER SIDE.
3. EXPOSED LIVE PARTS ON BOTH SIDES OF THE WORK SPACE (NOT GUARDED AS PROVIDED IN CONDITION 1) WITH THE OPERATOR BETWEEN.

3 DEDICATED SPACE REQUIREMENTS FOR PANELBOARDS
SCALE: NOT TO SCALE

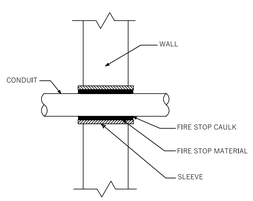

NOTES:
1. PROVIDE UL ASSEMBLY #W-L-1104.
2. USE WHERE CONDUITS PASS THRU WALL.
3. WHERE CONDUITS PASS THRU FOUNDATION WALLS, FLOOR SLAB ON EARTH, CONCRETE BEAM, BRICK WALL, OR WATER PROOF FLOORS, USE PIPE SLEEVES.

4 CONDUIT PENETRATION THRU FIRE RATED WALL
SCALE: N.T.S.

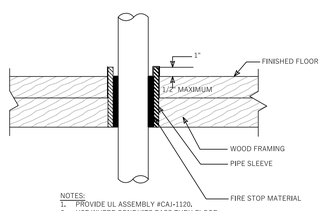

NOTES:
1. PROVIDE UL ASSEMBLY #CAJ-1120.
2. USE WHERE CONDUITS PASS THRU FLOOR.
3. WHERE CONDUITS PASS THRU FOUNDATION WALLS, FLOOR SLAB ON EARTH, CONCRETE BEAM, BRICK WALL, OR WATER PROOF FLOORS, USE PIPE SLEEVES.

5 CONDUIT PENETRATION THRU FIRE RATED FLOOR
SCALE: N.T.S.

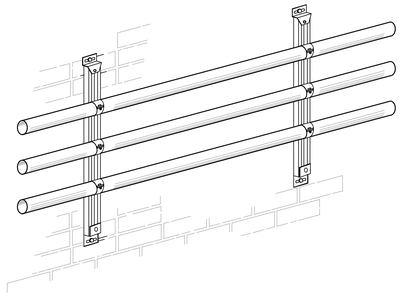

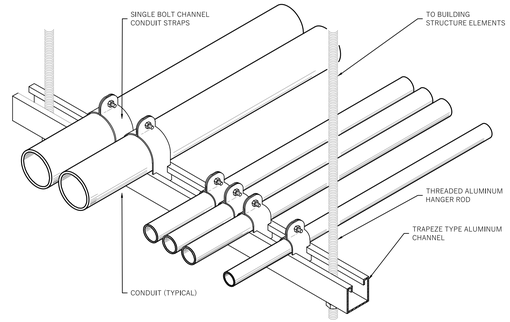

6 TYPICAL CONDUIT SUPPORT SYSTEMS
SCALE: N.T.S.

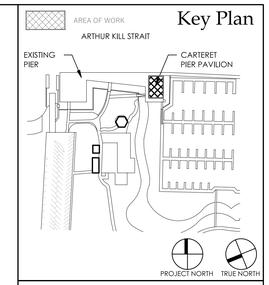

PROJECT
CARTERET PIER PAVILION

WATERFRONT PARK
200 MIDDLESEX AVENUE BLOCK 201 LOT 4
CARTERET, NEW JERSEY 07008

GEOTECHNICAL & STRUCTURAL ENGINEER

McLaren Technical Services, Inc.
Woodcliff Lake, New Jersey 07677
201.775.6000 | www.mgmclaren.com

MEP ENGINEER

KeRi ENGINEERING PC
911 Springfield Rd, Suite 2
Union, NJ 07083
T : 973.866.KeRi (5374)
F : 973.866.5370
W : keriengineering.com

CIVIL ENGINEER

1460 RT. 9 SOUTH
HOWELL, NEW JERSEY 07731
INFO@CMBSURI.COM
732.462.7400

KITCHEN DESIGN CONSULTANT

44 ST. JOHN STREET
GOSHEN, NEW YORK
845.360.5112
INFO@RRADESIGNS.COM

DMR
ARCHITECTURE
PLANNING
ENGINEERING
INTERIORS
CONSULTING
www.dmrarchitects.com

MEMBERS OF THE AMERICAN INSTITUTE OF ARCHITECTS

LLOYD A. ROSENBERG	NJ - AI 05526
KURT A. VIERHEILIG	NJ - AI 17809
PRADEEP KAPOOR	NY - 042197
FERNANDO ROBLEDO	NY - 033804
JANET PINI	NJ - AI 02102900

NOT VALID FOR BUILDING UNLESS SIGNED AND SEALED BY ARCHITECT

777 Terrace Avenue, 6th Floor
Hasbrouck Heights, New Jersey 07604
Tel 201 - 288 - 2600 || Fax 201 - 288 - 2662

NCARB NATIONAL COUNCIL OF ARCHITECTURAL REGISTRATION BOARDS

CO - 306 184 CT - 05438 NJ - AI 05526
NJ-BOARD OF PROFESSIONAL PLANNERS) - LI 01584
NY - 013025-1 PA - RA - 13437-B

DWG TITLE :

ELECTRICAL DETAILS

SCALE As indicated

DATE	DESCRIPTION	DRN	CHK
06/26/2023	RELEASED FOR BID	LD	MP

REV.	DATE	DESCRIPTION		

PROJECT NO.	SHEET NO.
5146	E-301

Copyright c 2022 by DMR PLOT DATE: 11/4/2022 3:33:09 PM

ELECTRICAL SPECIFICATIONS

A. GENERAL

1. ALL WORK SHALL BE COMPLETED IN ACCORDANCE WITH THE LATEST STATE CODES & ACCEPTED REVISION, OF THE NATIONAL ELECTRIC CODE (N.E.C), O.S.H.A, NFPA 70 & 101 CODES, AND THE RULES AND REGULATIONS OF ALL LOCAL, STATE AND FEDERAL AUTHORITIES HAVING JURISDICTION. PROVIDE OWNER WITH CERTIFICATES OF INSPECTION, IN CASE OF CONFLICTS BETWEEN PROVISIONS OF CODES, LAWS, ORDINANCES, ETC., THE MORE STRINGENT SHALL APPLY. WHERE CONFLICTS EXIT BETWEEN THE DRAWING AND SPECIFICATIONS OR BETWEEN THIS SECTION OF THE SPECIFICATION AND OTHER SECTIONS, THE MORE STRENGTH OR HIGHER COST OPTION SHALL APPLY.
2. THE CONTRACTOR SHALL COMPLETE THE SCOPE OF WORK IN ITS ENTIRELY, THE CONTRACTOR IS TO VISIT THE SITE, TAKE ALL REQUIRED NOTES AND PROVIDE A COMPLETE BID, THE CONTRACTOR WILL BE REQUIRED TO WORK WITH THE OWNER, ARCHITECT AND ENGINEER TO DETAIL ALL OF THE SPECIFIC REQUIREMENTS, ONCE THE CONTRACT IS AWARDED, IF THE SYSTEM IS DESCRIBED WITHIN THE SCOPE OF WORK AND THE PERFORMANCE OF THE SYSTEM IS DESCRIBED WITHIN THE SPECIFICATIONS, SCHEDULES AND DETAILS NO CHANGE ORDERS WILL BE ALLOWED, THE CONTRACTOR WILL BE REQUIRED TO PROVIDE A FULL SUBMISSIONS OF SHOP DRAWINGS AND COORDINATION SERVICES IN THE FIELD.
3. THE CONTRACTOR SHALL GIVE ALL NECESSARY NOTICES, OBTAIN ALL PERMITS; AND PAY ALL GOVERNMENT AND STATE SALES TAXES AND FEES WHERE APPLICABLE, AND OTHER COSTS, INCLUDING UTILITY CONNECTIONS OR EXTENSIONS IN CONNECTION WITH THE WORK, FILE ALL NECESSARY DRAWINGS, PREPARE ALL DOCUMENTS AND OBTAIN ALL NECESSARY APPROVALS OF ALL GOVERNMENTAL AND STATE DEPARTMENTS HAVING JURISDICTION, OBTAIN ALL REQUIRED CERTIFICATES OF INSPECTION FOR WORK, AND DELIVER A COPY TO THE OWNER AND ENGINEER BEFORE REQUEST FOR ACCEPTANCE AND FINAL PAYMENT FOR THE WORK.
4. DO ALL NECESSARY CUTTING AND ROUGH PATCHING. THE FOLLOWING WORK WILL BE DONE BY OTHERS: FINISH PAINTING AND PATCHING, MASONRY, AND CONCRETE FOUNDATIONS FOR EQUIPMENT, AND FURNISHING AND SETTING OF MOTORS.
5. THESE DRAWINGS INDICATE THE SIZES AND GENERAL LOCATION OF WORK. SCALED DIMENSIONS SHALL NOT BE USED, ANY DIMENSIONS NOT SHOWN SHALL BE TAINED FROM THE ARCHITECTURAL DRAWINGS OR AS DIRECTED BY ARCHITECT, FOR EXACT LOCATIONS, HEIGHT, DOOR SWINGS, MOUNTING HEIGHTS, ETC., REFER TO ARCHITECTS DRAWINGS AND DETAILS.
6. COORDINATE WORK WITH OTHER TRADES, CONFER WITH OTHER CONTRACTOR WHOSE WORK MIGHT AFFECT THIS INSTALLATION AND ARRANGE ALL PARTS OF THIS WORK AND EQUIPMENT IN PROPER RELATION TO THE WORK AND EQUIPMENT OF OTHERS. WITH THE BUILDING CONSTRUCTION AND WITH ARCHITECTURAL FINISH SO THAT IT WILL HARMONIZE IN SERVICE AND APPEARANCE.
7. ELECTRICAL CONTRACTOR SHALL MEET WITH SPRINKLER, HVAC SHEETMETAL AND PLUMBING CONTRACTORS AND MAKE THOROUGH ARRANGEMENTS WITH THE INSTRUCTION CONTRACTOR TO COORDINATE ALL WORK TO MAINTAIN CEILING HEIGHTS SHOWN ON ARCHITECTURAL DRAWINGS. EXTRA COMPENSATION WILL NOT BE GRANTED FOR MIS COORDINATED WORK.
8. ELECTRICAL CONTRACTOR, BEFORE SUBMITTING A PROPOSAL, SHALL VISIT AND EXAMINE CAREFULLY THE AREAS AFFECTED BY THIS WORK TO BECOME FAMILIAR WITH EXISTING CONDITIONS AND WITH THE DIFFICULTIES THAT WILL ATTEND THE EXECUTION OF THIS WORK. NO COMPENSATION WILL BE GRANTED FOR ADDITIONAL WORK CAUSED BY UNFAMILIARITY WITH SITE CONDITIONS THAT ARE VISIBLE OR READILY IDENTIFIED BY EXPERIENCED OBSCURERS. SUBMISSION OF A PROPOSAL WILL BE CONSTRUED AS EVIDENCE THAT SUCH AN EXAMINATION HAS BEEN MADE AND LATER CLAIMS WILL NOT BE RECOGNIZED FOR EXTRA LABOR, EQUIPMENT OR MATERIALS REQUIRED BECAUSE OF DIFFICULTIES ENCOUNTERED WHICH COULD HAVE BEEN FORESEEN HAD SUCH EXAMINATION BEEN MADE.
9. ALL PARTS OF THE EXISTING WORK AND ASSOCIATED EQUIPMENT SHALL BE INSPECTED FOR COMPLIANCE WITH THE NATIONAL ELECTRICAL CODE, ALL VIOLATIONS MUST BE INCLUDED IN THE BID AS ADDITIONAL SERVICES. SUBMISSION OF A PROPOSAL WILL BE CONSTRUED AS EVIDENCE THAT SUCH EXAMINATIONS HAS BEEN MADE.
10. ALL WORK SHALL BE GUARANTEED AGAINST DEFECTS FOR A PERIOD OF ONE YEAR FROM THE DATE OF FINAL ACCEPTANCE OF THE INSTALLATION, AND ANY PORTIONS OF THE WORK WHICH DEVELOP DEFECT DURING THAT TIME SHALL BE REPLACED OR REPAIRED IN A MANNER SATISFACTORY TO THE ARCHITECT.
11. FURNISH ADEQUATE LIABILITY INSURANCE AND BONDING AS REQUIRED BY THE OWNER AND SUBMIT DOCUMENTATION.
12. PREPARE AND FURNISH TO THE OWNER "AS-BUILT" PLANS FOR ALL WORK INSTALLED IN REPRODUCIBLE MYLAR FORM UNLESS OTHERWISE NOTED.
13. THE CONTRACTOR SHALL PREPARE AND SUBMIT TO THE ARCHITECT FOR APPROVAL SIX (6) COPIES OF OPERATION AND MAINTENANCE INSTRUCTIONS IN PRINTED FORM FOR EACH ITEMS OF EQUIPMENT OR SYSTEM INSTALLED IN THE BUILDING. COMPLETE INSTRUCTIONS FOR EACH SYSTEM SHALL BE ASSEMBLED AND BOUND IN A BROCHURE WITH HINGED HARD COVERS.
14. IF SUBSTITUTIONS FOR SPECIFIED EQUIPMENT ARE DESIRED, A LIST OF SUCH REQUEST SHALL BE SUBMITTED, IT SHALL BE UNDERSTOOD THAT ALL MATERIALS AND EQUIPMENT WILL BE FURNISHED AS SPECIFIED. ALL INFORMATION PERTINENT TO THE ADEQUACY AND ADAPTABILITY OF THE PROPOSED SUBSTITUTE ITEMS SHALL BE SUBMITTED TO THE ARCHITECT FOR APPROVAL. NO PROPOSED SUBSTITUTE ITEMS SHALL BE ORDERED OR CONSTRUCTED PRIOR TO RECEIVING THE ARCHITECTS WRITTEN APPROVAL.
15. "APPROVED EQUAL" MEANS ANY DEVICE, MATERIAL, OR EQUIPMENT CONSIDERED BY THE ARCHITECT TO BE EQUIVALENT IN QUALITY, CONSTRUCTION, PERFORMANCE, FINISH AND APPEARANCE TO THAT SPECIFIED. "FURNISH" AND "INSTALL" MEANS PURCHASE, ARRANGE DELIVERY OF, UNLOAD, INSTALL, CONNECT, TEST AND LEAVE READY FOR OPERATION.
16. ELECTRICAL CONTRACTOR SHALL PROVIDE TEMPORARY LIGHT AND POWER FOR THE NEW CONSTRUCTION AREAS IN ACCORDANCE WITH ACCEPTED STANDARDS ESTABLISHED BY O.S.H.A. ENERGY COSTS WILL BE BORNE BY THE OWNER.
17. ALL PARTS OF THE WORK AND ASSOCIATED EQUIPMENT SHALL BE TESTED AND ADJUSTED TO WORK PROPERLY AND BE LEFT IN PERFECT OPERATING CONDITION; THIS SHALL INCLUDE MEGGER TESTS BETWEEN PHASES AND BETWEEN EACH PHASE AND GROUND OF ALL FEEDERS AND SUB FEEDERS. CORRECT DEFECTS DISCLOSED BY THESE TESTS WITHOUT ANY ADDITIONAL COST TO THE OWNER. REPEAT TESTS ON REPAIRED OR REPLACED WORK. FINAL DOCUMENTED DATA SHALL BE GIVEN TO ARCHITECT.
18. CONTRACTOR SHALL STATE IN HIS PROPOSAL UNIT PRICES FOR ALL ELECTRICAL SYSTEMS, MATERIALS, EQUIPMENT, ETC. ANY ADDITIONAL WORK NOT CALLED FOR UNDER THIS CONTRACT WILL BE PERFORMED AT ANY TIME AND IN ANY QUANTITY AS DIRECTED BY THE GENERAL CONTRACTOR AT THE UNIT PRICES SET FORTH. SUCH WORK WILL BE PERFORMED UPON REQUEST AT ANY TIME UNTIL FINAL ACCEPTANCE OF ALL WORK. ALL SUCH ADDITIONAL WORK WILL BE PERFORMED IN ACCORDANCE WITH THE TERMS AND CONDITIONS OF THIS CONTRACT, IN THE EVENT THAT THE GENERAL CONTRACTOR SHALL DIRECT THE ELIMINATION OF ANY WORK UNDER THIS CONTRACT, THE CONTRACTOR WILL CREDIT TO THE GENERAL CONTRACTOR THE COST OF SAID ELIMINATED WORK AT THE UNIT PRICES SET FORTH.
19. DEFINITIONS:
    - A. FURNISH: WORDS "FURNISH" OR "SUPPLY" SHALL MEAN PURCHASE, DELIVER TO, AND OFF-LOAD AT THE JOB SITE, ALL READY TO BE INSTALLED INCLUDING WHERE APPROPRIATE ALL NECESSARY INTERIM STORAGE AND PROTECTION.
    - B. INSTALL: WORD "INSTALL" SHALL MEAN SET IN PLACE COMPLETE WITH ALL MOUNTING FACILITIES AND CONNECTIONS AS NECESSARY READY FOR NORMAL USE OR SERVICE.
    - C. PROVIDE: WORD "PROVIDE" SHALL MEAN FURNISH (OR SUPPLY) AND INSTALL AS NECESSARY.
    - D. SUBCONTRACTOR: WORD "SUBCONTRACTOR" MEANS SPECIFICALLY THE SUBCONTRACTOR WORKING UNDER THIS DIVISION. OTHER CONTRACTORS ARE SPECIFICALLY DESIGNATED "PLUMBING SUBCONTRACTOR", "GENERAL CONTRACTOR" AND SO ON. NOTE: TAKE CARE TO ASCERTAIN LIMITS OF RESPONSIBILITY FOR CONNECTING EQUIPMENT WHICH REQUIRES CONNECTIONS BY TWO OR MORE TRADES.
    - E. SUBSTITUTIONS: THE TERM "SUBSTITUTIONS" MEANS REQUESTS FOR CHANGES IN PRODUCTS, MATERIALS, EQUIPMENT, AND METHODS OF CONSTRUCTION PROPOSED BY THE CONTRACTOR.
21. MATERIALS AND EQUIPMENT SHALL BE UL LISTED.
22. ALL RACEWAYS AND EQUIPMENT SUSPENDED FROM THE BUILDINGS STRUCTURE SHALL BE PROVIDED WITH SWAY BRACING FOR SEISMIC RESTRAINTS.
23. PROVIDE TEMPORARY INSTALLATIONS AS REQUIRED; REMOVE AT JOB COMPLETION. CUT BACK TO FLOOR, WALL, OR CEILING AND PLUG ENDS OF CONCEALED CONDUITS MADE OBSOLETE BY
24. EXISTING CONDUITS CONCEALED IN MASONRY CONSTRUCTION, NOT INTERFERING WITH THE WORK OF THIS OR ANY OTHER TRADE MAY REMAIN; HOWEVER, WIRING SHALL BE REMOVED IN TOTAL FROM PANELBOARDS OR SOURCE OF POWER.

B. ORDINANCES AND CODES

WORK PERFORMED UNDER THIS CONTRACT SHALL AT A MINIMUM, BE IN CONFORMANCE WITH APPLICABLE NATIONAL, STATE AND LOCAL CODES HAVING JURISDICTION. EQUIPMENT FURNISHED AND ASSOCIATED INSTALLATION WORK PERFORMED UNDER THIS CONTRACT SHALL BE IN STRICT COMPLIANCE WITH CURRENT APPLICABLE CODES ADOPTED BY THE LOCAL AHJ, INCLUDING ANY AMENDMENTS AND STANDARDS AS SET FORTH BY THE FOLLOWING:

1. NATIONAL FIRE PROTECTION ASSOCIATION (NFPA)
2. UNDERWRITERS LABORATORIES (UL)
3. OCCUPATIONAL SAFETY AND HEALTH ADMINISTRATION (OSHA)
4. AMERICAN NATIONAL STANDARDS INSTITUTE (ANSI)
5. AMERICAN SOCIETY OF TESTING MATERIALS (ASTM)
6. RULES AND REGULATIONS OF PUBLIC UTILITIES AND MUNICIPAL DEPARTMENTS AFFECTED BY CONNECTION OF SERVICES.
7. OTHER NATIONAL STANDARDS AND CODES WHERE APPLICABLE.

WHERE THE CONTRACT DOCUMENTS EXCEED THE REQUIREMENTS OF THE REFERENCED CODES, STANDARDS ETC. THE CONTRACT DOCUMENTS SHALL TAKE PRECEDENCE. WHERE CONFLICTS BETWEEN VARIOUS CODES, ORDINANCES, RULES, AND REGULATIONS EXIST, COMPLY WITH THE MOST STRINGENT.

PROMPTLY BRING ALL CONFLICTS OBSERVED BETWEEN CODES, ORDINANCES, RULES, REGULATIONS, REFERENCED STANDARDS, AND THESE DOCUMENTS TO THE ATTENTION OF THE ARCHITECT AND ENGINEER FOR FINAL RESOLUTION. CONTRACTOR WILL BE HELD RESPONSIBLE FOR ANY VIOLATION OF THE LAW.

C. SHOP DRAWING

1. PROVIDE SHOP DRAWINGS AND OR SAMPLES (6 SETS FOR APPROVAL) FOR ALL PANEL BOARDS, LIGHT FIXTURES, RECEPTACLES, DISCONNECT SWITCHES, FIRE ALARM SYSTEM, WIRING DEVICES INCLUDING COVER PLATES AND POWER, PULL/SPLICE BOXES, FUSES, ETC, PRIOR TO ORDERING AND/OR FABRICATION.
2. TRANSMIT SUBMITTALS AS EARLY AS REQUIRED TO SUPPORT THE PROJECT SCHEDULE, ALLOW TWO WEEKS FOR ENGINEER REVIEW TIME, PLUS TO/FROM MAILING TIME VIA THE ARCHITECT, PLUS A DUPLICATION OF THIS TIME FOR RESUBMITTALS, IF REQUIRED, ONLY RESUBMIT THOSE SECTIONS REQUESTED FOR RESUBMITTAL.
3. ALL SHOP DRAWINGS REQUIRING WIRING DIAGRAMS SHALL BE SUBMITTED WITH SPECIFICATIONS FOR ALL DEVICES AND SEQUENCE OF OPERATION OF THE SYSTEM.
4. EQUIPMENT MAY NOT BE ORDERED OR FABRICATED UNTIL SUCH SHOP DRAWINGS HAVE BEEN "APPROVED AS NOTED."
5. ALL "DISAPPROVED" SHOP DRAWINGS SHALL BE REVISED AND RESUBMITTED IN ACCORDANCE WITH THE ABOVE.
6. DO NOT ORDER ANY MATERIALS OR EQUIPMENT PRIOR TO RECEIVING FINAL APPROVED SHOP DRAWINGS.

D. CONDUIT AND RACEWAYS

1. ALL WIRING SHALL BE RUN IN CONDUIT. UL LISTED ARMORED CABLE APPROVED FOR CONCEALED APPLICATION MAY BE USED FOR WIRING ABOVE DROPPED CEILING AND CONCEALED THE BEHIND WALLS. CONDUIT SHALL BE MADE OF STANDARD RIGID PIPE, AND SHALL BE ALUMINUM WHERE PERMITTED BY CODE. WHERE ALUMINUM IS NOT PERMITTED BY CODE, USE RIGID PVC CONDUIT. RIGID ALUMINUM CONDUIT SHALL BE USED FOR ALL RACEWAYS IN FLOOR SLABS AND STAINLESS STEEL SHALL BE USED FOR ALL RACEWAY OUTDOOR LOCATIONS. ELECTRIC METALLIC TUBING MAY BE USED IN DRY LOCATIONS FOR BRANCH CIRCUITING.
2. FINAL CONNECTION FROM MOTOR STARTING SWITCH TO MOTOR SHALL BE BY MEANS OF CONDUCTORS IN FLEXIBLE ALUMINUM CONDUIT, MAXIMUM LENGTH 18'.
3. HANGERS, SUPPORTS AND SLEEVES SHALL BE AS ACCEPTABLE TO THE ARCHITECT. SUPPORT CONDUITS ON EACH SIDE OF BENDS USING STAINLESS STEEL OR ALUMINUM STRAP, LAY-IN ADJUSTABLE HANGERS, CLEVIS HANGERS, AND SPLIT HANGERS. SUPPORTS SHALL BE INSTALLED WITHIN 3 FEET OF EVERY OUTLET BOX, JUNCTIONS BOX, PANEL, FITTING, ETC. DO NOT SPACE SUPPORTS FURTHER THAN 10 FEET APART AND NOT GREATER THAN 10'-0" CENTERS.
4. ALL CONDUIT AND TUBING SHALL BE CUT SQUARE AND REAMED AT THE ENDS. THOMAS & BETTS KOPR/SHIELD SHALL BE APPLIED TO ALL EXPOSED THREADS AFTER JOINTS HAVE BEEN MADE UP CLEAN AND TIGHT.
5. CONDUIT AND TUBING RUNS SHALL BE MECHANICALLY AND ELECTRICALLY CONTINUOUS FROM SERVICE STARTING TO ALL OUTLETS. CONDUIT SHALL ENTER AND BE SECURELY CONNECTED TO CABINET, JUNCTION BOX, PULL BOX OR OUTLET BOX BY MEANS OF LOCKNUTS ON THE OUTSIDE AND INSIDE AND AN INSULATED BUSHING ON THE INSIDE. IN TUBING OR FLEXIBLE METAL CONDUIT, THE ONE COMPRESSION LOCKNUT SHALL BE MADE WRENCH-TIGHT. ALL LOCKNUTS SHALL BE THE BONDING TYPE WITH SHARP EDGES FOR DIGGING INTO THE METAL WALL OF AN ENCLOSURE AND SHALL BE INSTALLED IN A MANNER THAT WILL ASSURE A LOCKING AND ELECTRICALLY CONTINUOUS INSTALLATION. LOCKNUTS AND BUSHINGS WILL NOT BE REQUIRED WHERE CONDUITS ARE SCREWED INTO TAPPED CONNECTIONS.
6. ALL VERTICAL RUNS OF CONDUIT OR TUBING TERMINATING IN THE BOTTOMS OF WALL BOXES OR CABINETS, OR SIMILAR LOCATIONS, SHALL BE PROTECTED FROM THE ENTRANCE OF FOREIGN MATERIAL PRIOR TO THE INSTALLATION OF CONDUCTORS.
7. EVERY CONDUIT SYSTEM SHALL BE INSTALLED COMPLETE BEFORE ANY CONDUCTORS ARE DRAWN IN. WIRE PULLING LUBRICANTS, WHEN UTILIZED, SHALL BE IN ACCORDANCE WITH THE REQUIREMENTS OF UNDERWRITERS' LABORATORIES,INC., APPLICABLE TO THE SPECIFIC CONDUCTOR OR CABLE INSULATION AND RACEWAY MATERIAL.
8. FIRE RATED FITTINGS SHALL BE PROVIDED FOR EACH CONDUIT PASSING THROUGH FIRE-RATED SLABS AND PARTITIONS. WHERE SLEEVES OR OTHER TYPES OF OPENINGS ARE PROVIDED FOR RACEWAY OR CABLE/WIRING PENETRATIONS THROUGH FLOOR SLABS AND FIRE RATED WALLS, THE SPACE BETWEEN THE RACEWAY AND THE SLEEVE OR OPENING SHALL BE FILLED WITH A FIRE RESISTANT MATERIAL.
9. GROUP RELATED CONDUITS; SUPPORT USING CONDUIT RACK, CONSTRUCT RACK USING ALUMINUM CHANNEL.
10. FASTEN CONDUIT SUPPORTS TO BUILDING STRUCTURE AND SURFACES.
11. ARRANGE CONDUIT TO MAINTAIN HEADROOM AND PRESENT NEAT APPEARANCE.
12. MAINTAIN 12-INCH CLEARANCE BETWEEN CONDUIT AND SURFACES WITH TEMPERATURES EXCEEDING 104 DEGREES F. WHEREVER POSSIBLE. INSTALL HORIZONTAL RACEWAY RUNS ABOVE WATER AND STEAM PIPING.
13. INSTALL NO MORE THAN EQUIVALENT OF THREE 90-DEGREE BENDS BETWEEN BOXES. USE FACTORY ELBOWS FOR ALL 90 DEGREE BENDS FOR CONDUITS 1-1/4" OR LARGER.

E. CONDUCTORS

1. ALL WIRES AND CABLES SHALL BE "THWN/THHN" FOR BRANCH CIRCUITS AND FEEDERS IN RACEWAY. NO WIRE SMALLER THAN #12 AWG SHALL BE USED FOR LIGHT OR POWER SERVICES. ALL 120 VOLT BRANCH CIRCUITS MORE THAN 75 FEET TO THE FIRST OUTLET SHALL BE #10 FOR THE ENTIRE LENGTH OF THE BRANCH CIRCUIT. ALL CONDUCTORS SHALL BE TINNED COPPER. SOLID CONDUCTORS SHALL BE USED FOR ALL WIRING #10 AWG AND SMALLER. STRANDED CONDUCTORS SHALL BE USED FOR #6 AND LARGER. ALL CONTROL CONDUCTORS SHALL BE #14 AWG. CONNECTIONS FOR WIRE #8 AND SMALLER SHALL BE MADE WITH T&B "PIGGY PIGTAILS".
2. ALL WIRES AND CABLES IN PULL, SPLICE AND CABLE SUPPORT BOXES, IN PANELS AND POINTS OF TERMINATION SHALL BE BUNDLED AND LACED BY CIRCUITS AND TAGGED USING NYLON TIEWRAP MATERIAL AND USING FLAME RESISTING TAGS OF ADHESIVE MATERIAL. TAGS SHALL IDENTIFY CABLES AND PIECES OF EQUIPMENT SERVED. TAGS SHALL BE T&B'S "TY-RAP" OR "E-Z CODE."
3. EXCEPT IN NAVIGATION CONTROLLERS, SWITCHES AND PANELBOARDS, ALL CABLES SHALL BE TERMINATED, SPLICED AND TAPPED WITH COLOR-KEYED, DOUBLE INDENT COMPRESSION CONNECTORS, AS MANUFACTURED BY THE THOMAS & BETTS COMPANY. SERIES 54000 OR AS ACCEPTABLE. MANUFACTURER'S RECOMMENDED TOOLING SHALL BE USED TO APPLY. LUGS SHALL BE THE TWO-HOLE TYPE. INSULATE ALL SPLICES AND TAPS WITH HEAT SHRINKABLE INSULATION, RAYCHEM OR THOMAS & BETTS.
4. CABLES SHALL BE COLOR-CODED TO INDICATE PHASING, NEUTRAL AND GROUND AS WELL AS VOLTAGE. THE FOLLOWING COLOR CODING SHALL BE USED UNLESS THE BUILDING USES A DIFFERENT COLOR CODING SYSTEM TO IDENTIFY CABLES.
5. SYSTEM VOLTAGE

120/208V	PHASE
BLACK	A
RED	B
BLUE	C
WHITE	NEUTRAL
GREEN	GROUND

6. WIRING WHEN INSTALLED SHALL NOT HAVE VOLTAGE DROP IN EXCESS OF LIMITATIONS AS ESTABLISHED BY THE SEVERAL AGENCIES HAVING JURISDICTION OVER THIS WORK AND AS RECOMMENDED OR REQUIRED BY THE VARIOUS SPECIAL EQUIPMENT SUPPLIERS.
7. TOTAL ELECTRIC LOAD SHALL BE BALANCED WITHIN TEN PERCENT ON FEEDER CONDUCTORS. MAKE SUCH ADJUSTMENTS OF CIRCUITS AFTER SYSTEMS ARE PUT INTO OPERATION AS REQUIRED TO ATTAIN SAID BALANCE. VOLTAGE AND AMPERAGE READINGS SHALL BE TAKEN TO ASSURE COMPLIANCE. MAKE ALL NECESSARY ADJUSTMENTS OF TRANSFORMER TAPS, ETC. AS REQUIRED AND INDICATE SUCH CHANGES ON SCHEDULES AND AS-BUILT DRAWINGS.

F. LIGHT AND POWER MATERIALS

1. FURNISH AND INSTALL ALL JUNCTION BOXES, PULLBOXES, CABLE SUPPORT BOXES, FITTINGS, DEVICES, RACEWAYS, CONDUCTORS, CABLE SUPPORTS, CONNECTIONS, MOUNTING ACCESSORIES, ADAPTERS AND ALL OTHER MATERIALS, EQUIPMENT AND LABOR NECESSARY FOR A COMPLETE ELECTRICAL INSTALLATION.
2. ELECTRICAL OUTLETS SHALL BE INSTALLED VERTICALLY, UNLESS NOTED TO THE CONTRARY, AT HEIGHTS AS NOTED. THOSE LOCATED ON INTERIOR COLUMNS SHALL BE CENTERED LATERALLY.
3. OUTLET BOXES SHALL BE STAINLESS STEEL, 4" SQUARE, 1-1/2" DEEP MINIMUM. FOR DEVICES REQUIRING SINGLE GANG WALL OPENING PROVIDE REQUIRED EXTENSION RINGS. USE CAST BOXES FOR EXTERIOR USE. ON EXTERIOR OF BUILDING EQUIP CAST BOX WITH NEMA 4 COVER.
4. ALL OUTLET AND/OR JUNCTION SHALL BE SIZED TO ACCOMMODATE THE QUANTITY OF WIRES INDICATED. ALL BOXES SHALL BE CLEARLY MARKED WITH CIRCUIT NUMBERS CORRESPONDING WITH PANEL SCHEDULES. ALL EMERGENCY AND FIRE ALARM BOXES SHALL BE SPRAY PAINTED IN RED AND SERVICE IDENTIFIED.
5. ALL WIRING DEVICES SHALL BE SPECIFICATION GRADE. COMPOSITION BASE AND CONFORM TO NEMA STANDARD WD-1 FOR HEAVY DUTY USE RECEPTACLES. PERSONAL COMPUTER RECEPTACLES SHALL HAVE A DISTINGUISHING COLOR AS DIRECTED BY ARCHITECT. WIRING DEVICE COLOR SHALL BE AS SELECTED BY ARCHITECT, UNLESS OTHERWISE NOTED ON ARCHITECTURAL DRAWINGS. WIRING DEVICES SHALL BE AS FOLLOWS:

TYPE OF DEVICE	HUBBELL	PASS & SEYMOUR	LEVITON	COPPER WIRING DEVICES
DUPLEX RECEPTACLE	BR20	CR20	CR20	CR20
GFCI RECEPTACLE	GF20LA	2095	7899-H	VGF20
GFCI RECEPTACLE - WEATHER RESISTANT	GFTR20	2095TRWR	W7899	WRVGF20
BLANK FACE GFCI	GFBF20	2085	7590	VGFD20
QUAD/4-PLEX	HBL 420	420H	21254	N/A
SINGLE POLE SWITCH	DS120	CS20AC1	CSB1-20	CSB120

6. WHERE MULTIPLE SWITCHES ARE SHOWN AT ONE LOCATION THEY SHALL BE INSTALLED IN A MULTI-GANG OUTLET BOX UNDER A COMMON FACEPLATE.
7. DISCONNECTS
   A) GENERAL.
      1) EXTERNAL OPERATING HANDLE WITH POSITION INDICATION INTERLOCKED WITH ENCLOSURE COVER TO PREVENT OPENING COVER UNLESS DISCONNECT IS IN THE "OFF" POSITION. INTERLOCK TO BE DEFEATABLE FOR MAINTENANCE PURPOSES.
      2) PROVISIONS FOR LOCKING HANDLE IN THE "OFF" POSITION.
      3) ENCLOSURES SHALL BE NEMA 4X, UNLESS OTHERWISE NOTED.
      4) WHERE WEATHERPROOF ENCLOSURES ARE INDICATED PROVIDE NEMA 3R.
      5) FUSE CLIPS SHALL BE REJECTION TYPE.
   B) DISCONNECT SWITCHES SHALL BE 3-POLE, HEAVY DUTY, HORSEPOWER RATED QUICK-MAKE, QUICK-BREAK MECHANISM WITH ARC-QUENCHING DEVICE ON EACH POLE FOR SWITCHES ABOVE 240 VOLTS AND FUSED TYPE UNLESS NOTED ON THE DRAWINGS AS NON-FUSED TYPE.
   C) DISCONNECT - CIRCUIT BREAKER - THERMAL-MAGNECTIC, MOLDED CASE TYPE, TRIP-FREE, WITH EACH POLE CONTAINING THERMAL INVERSE TIME DELAY AND MAGNETIC INSTANTANEOUS OVERCURRENT TRIP ELEMENTS AND INTERCHANGEABLE TRIP UNITS FOR 225 AMPERE FRAME SIZE AND LARGER.
8. FUSES - DUAL ELEMENT, CURRENT LIMITING, HIGH INTERRUPTING CAPACITY, SUITABLE FOR USE ON CIRCUITS UP TO 200,000 AMPERES AVAILABLE AT RATED VOLTAGE, U.L. CLASS RKL

G. NAMEPLATES

ALL EXISTING AND NEW DISCONNECT SWITCHES, AND OTHER EQUIPMENT ENCLOSURES AFFECTED BY THE SCOPE OF WORK SHALL BE PROVIDED WITH NAMEPLATES WITH EQUIPMENT DESIGNATIONS AS INDICATED ON THE DRAWINGS. FOR PANELBOARDS WITHOUT DOORS A SEPARATE NAMEPLATE SHALL BE PROVIDED FOR EACH CIRCUIT. NAMEPLATES SHALL BE LAMINATE PLASTIC WITH 3/4" WHITE LETTERS ON A BLACK BACKGROUND, FASTENED WITH COUNTERSINK, OVAL HEAD CHROME PLATED MACHINE SCREWS.

H. GROUNDING AND BONDING

1. CONNECT SYSTEM COMPONENTS MECHANICALLY AND ELECTRICALLY TO PROVIDE AN INDEPENDENT RETURN PATH TO GROUNDING ELECTRODE.
2. USE EXOTHERMIC WELDING PROCESS FOR INACCESSIBLE CONNECTIONS.
3. WHERE FLEXIBLE METALLIC CONDUIT IS USED AN INTERNAL BONDING CONDUCTOR SHALL BE INSTALLED.
4. GROUND MOTORS BY CONNECTING A CONDUCTOR FROM A GROUNDING BUSHING IN THE STARTER TO THE MOTOR FRAME. CONDUCTOR SHALL BE INSTALLED IN THE CONDUIT WITH THE CIRCUIT CONDUCTORS AND TERMINATED IN THE MOTOR CONNECTION BOX PROVIDED THE TERMINAL IS MECHANICALLY CONNECTED TO THE FRAME.
5. SEE GROUNDING SYSTEM DIAGRAM ON ELECTRICAL DRAWINGS FOR THE EXTENT OF GROUND SYSTEM.
6. GROUND RESISTANCE SHALL BE OF 5 OHMS OR LESS.

I. PANEL BOARD/SWITCHBOARD

1. PROVIDE DEAD-FRONT SAFETY CONSTRUCTED FACTORY-ASSEMBLED PANELBOARDS IN SIZES AND RATINGS INDICATED, EQUIP WITH PANELBOARD UNIT DEVICES, OF TYPES, RATINGS AND CHARACTERISTICS INDICATED. CONSTRUCT WITH SOLID TIN PLATED COPPER, RECTANGULAR BUS BARS, SECURELY MOUNTED AND BRACED, AND WITH COMPRESSION LUGS BOLTED ON MAIN BUS BARS FOR INDICATED SERVICE CHARACTERISTICS. PROVIDE BRANCH CIRCUITS WITH CIRCUIT BREAKERS AS INDICATED. PROVIDE PANELBOARDS FABRICATED BY SAME MANUFACTURER AS ENCLOSURES, AND WHICH MATE PROPERLY WITH ENCLOSURES. PROVIDE BARE UNINSULATED GROUND BAR.
2. SHORT CIRCUIT RATING:
   A) FULLY RATED TO INTERRUPT SYMMETRICAL SHORT-CIRCUIT CURRENT AVAILABLE AT TERMINALS.
3. PROTECTIVE DEVICES:
   A) INCOMING FEEDER MAIN CIRCUIT BREAKER:
      1) RMS SENSING, FIELD REPLACEABLE RATING PLUG; WITH THE FOLLOWING FIELD-ADJUSTABLE SETTINGS: INSTANTANEOUS TRIP, LONG- AND SHORT-TIME PICKUP LEVELS, LONG- AND SHORT-TIME TIME ADJUSTMENTS, GROUND-FAULT PICKUP LEVEL, TIME DELAY AND I2T RESPONSE.
4. SUBMITTALS:
   A) PRODUCT DATA: OVERCURRENT PROTECTIVE DEVICE, ACCESSORY, AND COMPONENT INDICATED. INCLUDE DIMENSIONS AND MANUFACTURERS' TECHNICAL DATA ON FEATURES, PERFORMANCE, ELECTRICAL CHARACTERISTICS, RATINGS AND FINISHES.
   B) SHOP DRAWINGS:
      1) DIMENSIONED PLANS, ELEVATIONS, SECTIONS, AND DETAILS. SHOW TABULATIONS OF INSTALLED DEVICES, EQUIPMENT FEATURES, AND RATINGS. INCLUDE THE FOLLOWING:
         - ENCLOSURE TYPES AND DETAILS FOR TYPES OTHER THAN NEMA 250, TYPE 1.
         - BUS CONFIGURATION, CURRENT, AND VOLTAGE RATINGS.
         - SHORT CIRCUIT CURRENT RATING AND OVERCURRENT PROTECTIVE DEVICES.
         - SEE "FAULT PROTECTION AND COORDINATION STUDY" SECTION OF THIS SPECIFICATION FOR ADDITIONAL REQUIREMENTS.
      2) WIRING DIAGRAMS: DIAGRAM POWER, SIGNAL AND CONTROL WIRING AND DIFFERENTIATE BETWEEN MANUFACTURER-INSTALLED AND FIELD-INSTALLED WIRING.

J. PANELBOARD

1. PANELBOARDS SHALL BE OF THE DEAD FRONT TYPE MANUFACTURED IN CODE GAUGE AND SIZE BOXES FOR MOUNTING AS INDICATED ON PLANS COMPLETE WITH DOOR-IN-DOOR TRIM,AND LOCKS. ALL LOCKS SHALL BE KEYED ALIKE.
2. CIRCUIT BREAKERS SHALL BE OF THE BOLT-ON THERMAL MAGNETIC MOLDED CASE TYPE, AND SHALL HAVE THE TRIP RATINGS AND NUMBER OF POLES SHOWN IN SCHEDULES ON THE CONTRACT DRAWINGS.
3. LOCKING TABS SHALL BE PROVIDED ON ALL CIRCUIT BREAKERS SERVING EMERGENCY LIGHTING, FIRE ALARM SYSTEM, SECURITY SYSTEMS AND OTHER EMERGENCY OR CRITICAL EQUIPMENT AND AS NOTED ON THE CONTRACT DRAWINGS.A TOTAL OF 25 SPARE LOCKING TABS SHALL BE FURNISHED TO THE OWNER.
4. BUSES SHALL BE HARD DRAWN TIN PLATED COPPER OF 98 PERCENT CONDUCTIVITY AND SHALL HAVE CROSS SECTIONAL AREAS LARGE ENOUGH TO LIMIT THE TEMPERATURE RISE, WHEN CARRYING FULL LOAD, TO 35 DEGREES C. ABOVE AN AMBIENT INSIDE THE ENCLOSURE OF 55 DEGREES C. AS DEFINED IN IEEE STANDARD RULES. MAIN BUS CAPACITY SHALL BE AS SHOWN ON THE CONTRACT DRAWINGS.
5. THE CIRCUIT DIRECTORY SHALL BE TYPEWRITTEN AND PROVIDED INSIDE EACH PANEL DOOR TO INDICATE EQUIPMENT AND/OR AREA SERVED.
6. TIE-BARS SHALL NOT BE USED TO CREATE M

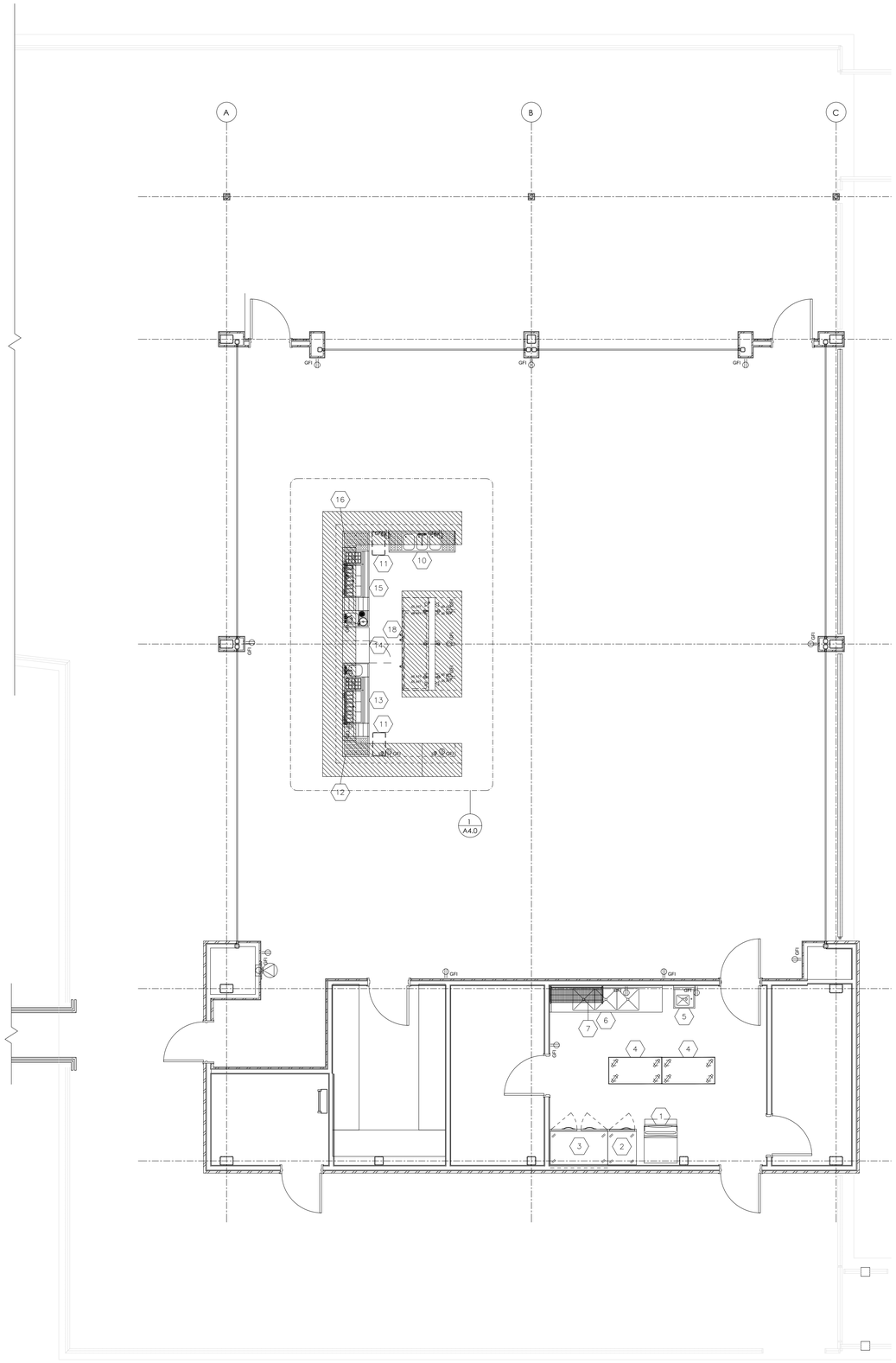
A
B
C
GFI
16
10
11
15
18
14
13
11
12
1
A4.0
GFI
GFI
GFI

PROJECT MANUAL
FOR THE

CARTERET PIER PAVILION
AT THE
CARTERET WATERFRONT PARK

200 MIDDLESEX AVE, CARTERET, NJ 07008

Owner
Borough Of Carteret
61 Cooke Avenue
Carteret, New Jersey 07008

June 26, 2023
Bid Documents

DMR Architects
Heights Plaza
777 Terrace Avenue
Hasbrouck Heights, New Jersey 07604
(201) 288-2600

DMR PROJECT NO. 5146

Vol. No.____

SECTION 000100 - LIST OF CONTRACT DOCUMENTS
For the
CARTERET PEIR PAVILION
at the
CARTERET WATERFRONT PARK
Borough of Carteret
DMR Project No. 5146

000000 Cover Sheet	1
000100 List of Contract Documents	4

SPECIFICATIONS

BIDDING REQUIREMENTS

Advertisement and Notice To Bidders	2
General Instructions to Bidders	8
Mandatory Equal Employment Opportunity Language (Exhibit A)	1
Business Registration of Contractors - Governmental Agencies	1
American With Disabilities Act Of 1990	1
Payment Policy	1
Apprenticeship And Training Program Certification	1
Selection of Responsible Contractors	1
Checklist – Competitive Contracting Process	1
Proposal Form & Submission Documents	16
Wage Rate Requirements	1
Wage Rates-Middlesex	128
Standard Form of Agreement Between Owner & Contractor-A101-2017	7
General Conditions of the Contract for Construction A201-2017	43

DIVISION 01- GENERAL REQUIREMENTS

011000	Summary of the Work	4
012100	Allowances	3
012300	Alternates	2
012600	Contract Modification Procedures	3
012900	Payment Procedures	5
013100	Project Management and Coordination	9
013200	Construction Progress Documentation	8
013233	Photographic Documentation	3
013300	Submittal Procedures	6
014000	Quality Requirements	8
014200	References	3
014500	Cutting and Patching	4
015000	Temporary Facilities and Controls	8
016000	Product Requirements	8
017300	Execution	7
017700	Closeout Procedures	8
017823	Operation and Maintenance Data	8
017839	Record Documents	4
017900	Demonstration and Training	5
018500	Warranties and Bonds	3

DIVISION 02 – EXISTING CONDITIONS

020700	Selective Demolition	6

DIVISION 5 METALS

053100	Steel Decking	4
055000	Metal Fabrications	10
055213	Pipe and Tube and Railings	4

DIVISION 6 – WOOD, PLASTICS and COMPOSITE

061000	Rough Carpentry	6
061063	Exterior Rough Carpentry	3
061600	Sheathing	3
066113	Simulated Stone Fabrications	6
066400	Plastic Paneling and Casework	3
067113	Composite Trim Architectural Elements	3

DIVISION 7 - THERMAL and MOISTURE PROTECTION

072100	Thermal Insulation	7
072500	Weather Barriers	5
074100	Sheet Metal Roofing and Wall Panels	5
074113	Sheet Metal Soffit	4
074243	Exterior Wall Siding System	9
076200	Sheet Metal Flashing and Trim	
077104	Manufactured Gutters and Downspouts	4
078400	Firestopping	10
079200	Joint Sealants	12

DIVISION 8 - OPENINGS

081743	FRP / Aluminum Hybrid Doors	10
083113	Access Doors and Frames	4
083300	Overhead Rolling Shutters	2
084113	Aluminum-Framed Entrances & Storefronts	5
084413	Glazed Aluminum Curtain Wall	5
086300	Metal Framed Skylights	4
087100	Door Hardware	17

DIVISION 9 - FINISHES

092900	Gypsum Board	9
093013	Ceramic Tiling	3
095423	Exterior Linear Metal Ceiling System	7
096513	Resilient base and accessories	6
097700	Fiberglass Reinforced Wall Panels	5
099600	High-Performance Coatings	11

DIVISION 10 - FINISHES

101419	Dimensional Letter Signage	8
104250	Signage	8
105220	Fire Extinguishers, Cabinets And Accessories	4
105240	Data and Key Storage Cabinets	2

DIVISION 11 - EQUIPMENT

114000	Food Service Equipment	21
114001	Food Service Equipment Cut Book	36

DIVISION 23 - HEATING, VENTILATING, AND AIR CONDITIONING (HVAC)

233439	Direct Drive High Volume, Low Speed (HVLS) Overhead Fans	7

LIST OF DRAWINGS

GENERAL

T1.0 COVER SHEET
T1.1 DRAWING LIST, ACCESSIBLE, MOUNTING HEIGHTS & BARRIER FREE DIAGRAMS
T1.1 NOTES, CODE ANALYSIS, ABBREVIATIONS & SYMBOLS
EG1.1 EGRESS PLAN

STRUCTURAL

S001 GENERAL NOTES, ABBREVIATIONS, & SHEET INDEX
S002 STRUCTURAL NOTES
S100 PAVILION FRAMING PLAN
S101 ROOF FRAMING PLAN
S200 COLUMN SCHEDULE
S201 PAVILION ELEVATIONS
S300 TYPICAL DETAILS
S301 TYPICAL DETAILS
S302 TYPICAL DETAILS

ARCHITECTURAL

D1.0 PIER DEMOLITION PLAN
A1.0 PAVILION CONSTRUCTION / POWER PLAN
A1.1 MECHANICAL LOFT CONSTRUCTION / POWER PLAN
A2.0 ROOF PLAN & DETAILS
A3.0 PAVILION & ATTIC REFLECTED CEILING PLAN &DETAILS
A4.0 ENLARGED BAR AREA PLAN, ELEVATIONS & SECTION DETAILS
A4.1 ENLARGED PLAN DETAILS
A5.0 EXTERIOR ELEVATIONS
A5.1 INTERIOR ELEVATIONS
A6.0 PAVILION SECTIONS
A7.0 WALL SECTIONS
A7.1 SECTION DETAILS
A9.0 GUARDRAIL ELEVATIONS & DETAILS
A10.0 EXTERIOR WALL & PARTITION TYPES
A11.0 DOOR TYPES, DOOR SCHEDULE, GLAZING ELEVATIONS & DETAILS
A12.0 FINISHES PLAN & SCHEDULE
A13.0 SIGNAGE

FIRE PROTECTION

FP-001 ABBREVIATIONS SYMBOLS & NOTES
FP-101 GROUND FLOOR – NEW WORK
FP-301 FIRE PROTECTION SPECIFICATIONS

PLUMBING

P-001 ABBREVIATIONS SYMBOLS & NOTES
P-010 PLUMBING SCHEDULES
P-101 PLUMBING GROUND FLOOR – NEW WORK
P-201 PLUMBING DETAILS
P-301 PLUMBING SPECIFICATIONS
P-401 PLUMBING RISERS

MECHANICAL

M-001 SYMBOLS, NOTES, ABBREVIATIONS, SPECIFICATIONS & SCHEDULES
M-101 MECHANICAL NEW WORK

ELECTRICAL

E-001 ABBREVIATIONS, SYMBOLS &
E-101 ELECTRICAL LIGHTING PLAN – DEMOLITION & NEW WORK
E-102 ELECTRICAL POWER & SYSTEMS – NEW WORK
E-201 ELECTRICAL SCHEDULES & SINGLE LINE DIAGRAM
E-301 ELECTRICAL DETAILS
E-401 ELECTRICAL SPECIFICATIONS

FOOD SERVICE

FS1.0 FOOD SERVICE EQUIPMENT PLAN & SCHEDULE

END OF SECTION 000100

BOROUGH OF CARTERET

ADVERTISEMENT AND NOTICE TO BIDDERS

Notice is hereby given that sealed Bids will be received by the Borough of Carteret for: "**The Carteret Pier Pavilion**", opened and read aloud at Borough Hall, 2nd Floor Council Chambers, 61 Cooke Avenue, Carteret, New Jersey, 07008 on (**Friday, August 11, 2023 at 10:00 AM**) prevailing local time.

The project consists of the construction of a three season steel & wood construction pavilion as shown on the Plans and in the specifications.

Bidding Documents can be requested by sending an email to inquiry@dmrarchitects.com on/after June 30,2023 at the Architect's office; DMR Architects, 777 Terrace Ave., 6 th Floor, Hasbrouck Heights, New Jersey 07604, during business hours.

Please note in order to be on the list for the potential bidders the bids must be purchased from the Architect by the bidders themselves, bids won't be accepted from the bidders who are not on the Architect's list of plan holders.

A non-mandatory Pre-Bid Conference will be held on site, at 200 Middlesex Ave, Carteret, NJ 07008, on Monday July 17, 2023 at 10:00AM.

Bids must be furnished on the proposal sheets included in the Contract Documents, enclosed in a sealed envelope and addressed to the Mayor and Borough Council, Borough of Carteret, New Jersey and plainly marked on the outside with the name and address of the bidder and the Contract Number and Title.

Each bid must be accompanied by a certified check of not less than ten (10%) percent of the bid payable without any conditional endorsement as a guarantee that in case the contract is awarded to the bidder, he will within ten (10) days thereafter execute such contract and furnish satisfactory performance bond. Upon failure to do so, he shall forfeit the bid security as liquidated damages and the acceptance of the bid will be contingent upon the fulfillment of this requirement by the bidder. No interest shall be allowed upon any such certified check. A bid bond in the amount of ten (10%) percent of the bid may be substituted for certified check, except the amount of the bid security shall not be less than $500.00 - nor more than $20,000.00. Each bid must be accompanied by a Certificate of Experience and Certificate of Equipment.

Each bid must also be accompanied by a certificate of Consent of Surety from a bonding company licensed to do business in the State of New Jersey guaranteeing that if the proposal of the bidder be accepted they will furnish the bond set forth in the Instructions to Bidders and the acceptance of the bid will be contingent upon the fulfillment of this requirement.

Evaluation and award of the bid shall involve a thorough review of the Contractor's technical capability, corporate experience, quality, past performance, technical plans, schedules, other submittals, and bid prices. The Borough reserves the right to increase or decrease quantities specified in the manner designated in the Specifications. The Borough reserves the right to award this contract based on funds available.

Bidders are required to comply with the requirements of the Americans with Disabilities Act (N.J.S.A.10:5-31 et seq.) and Affirmative Action (N.J.A.C. 17:27) and with the disclosure provisions of N.J.S.A. 19:44A-20.13. The successful bidder shall be required to comply with the provisions of the New Jersey Prevailing Wage Act, Chapter 150 of the Laws of 1963, effective January 1, 1964.

Bidders shall comply with N.J.S.A. 52:32-44 latest revision, regarding Business Registration with the New Jersey Division of Revenue.

During the performance of this contract the Contractor agrees to comply with the requirements of P.L. 1975, c. 127 (N.J.A.C. 17:27), all requirements of the State of New Jersey Worker Health and Safety Act (N.J.A.C. 12:110 et seq.) as amended and the United States Occupational Safety and Health Act (OSHA) (29 CFR 1910), as amended with regard to worker and jobsite safety.

No bidder may withdraw his bid for a period of sixty (60) days after the date set for the opening thereof. The successful bidder will be required to furnish a surety company bond in the full amount of the contract price indemnifying the Borough of Carteret, New Jersey for all proceedings, suits or actions of any kind of description and conditional for the faithful performance of the work.

The Borough of Carteret reserves the right to reject any and all proposals to the extent permitted by law (in accordance with N.J.S.A. 40A:11-13.2 and applicable case law). An award will be made or proposals will be rejected within sixty (60) calendar days after the opening of the proposals, unless the Mayor and Council extend the award period.

All Addenda will be issued in electronic format (PDF) to the registered bidders. It is the sole responsibility of the respondent to be aknowledge the receipt of all addenda related to the procurement.

Respondents shall comply with the said requirements.

RICARDO LLANOS – QUALIFIED PURCHASING AGENT

BOROUGH OF CARTERET

GENERAL INSTRUCTIONS TO BIDDERS

1B.1 RECEIPT AND OPENING OF SUBMISSIONS

1B.1.1 OWNER AND PROJECT

The Borough of Carteret, Middlesex County, New Jersey (hereinafter called the "OWNER") invites submissions for the service(s) mentioned in the Public Notice for Solicitation through the competitive contracting process.

1B.1.2 TIME AND PLACE OF SUBMISSION OPENINGS

Submissions will be received by the PURCHASING AGENT and/or her designated representative at the time and place mentioned in the Public Notice for Solicitation, and at such time and place will be publicly opened and read aloud. Sealed submissions may also be submitted **by mail or in person, prior to the solicitation date and time, to Borough of Carteret, Attn: Purchasing Division, Borough of Carteret, 100 Cooke Avenue, Carteret, New Jersey 07008**

1B.1.3 SUBMISSIONS NOT IN COMPLIANCE

The Municipality may consider informal any Proposal not prepared and submitted in accordance with the provisions hereof and may waive any informalities or reject any and/or all Proposals.

1B.1.4 WITHDRAWING SUBMISSIONS

Submissions forwarded to the Purchasing Agent and/or his designated representative before the time of opening of submissions may be withdrawn upon written application and who shall be required to produce evidence showing that they are or they represents the principal or principals involved in the submission. Once submissions have been opened, they must remain firm for a period of sixty (60) days.

1B.2 QUALIFICATIONS

The evaluation criteria were developed in accordance with the New Jersey Administrative Code 5:34-4.2 and the “Best Practices for Awarding Service Contracts” issued by the State Comptroller.

Selection will be made to the respondent deemed fully qualified and best suited among those submitting proposals based on a weighting of the following factors:

A. Personnel assigned to perform various tasks for the BOROUGH’s revaluation will be fulltime and experienced in their designated tasks. The responsible personnel are required to have at least the following minimum qualifications:

1. Principal appraisers in charge of the mass appraisal work shall have not less than ten years of practical experience involving diverse commercial, industrial, apartment and residential properties. At least five years of this experience shall have been in the mass appraisal field and have occurred in the past five years. The principal Class 4 appraiser and those determining final land values shall be New Jersey State Certified Real Estate Appraisers and shall have at least ten years of full time, practical and extensive appraisal experience in the valuation of the four classifications of real property.
2. Supervisors shall have not less than five years of practical and extensive appraisal experience in the appraisal of the particular type of properties for which they are responsible. Three years of this experience must have been in the mass appraisal field and occurred within the past five years;
3. Field inspectors and all field personnel involved in the inspection of properties for prime data to be entered on property record cards shall have not less than one year of experience in the mass appraisal field. All field personnel shall be twenty-one years of age or older and be thoroughly trained in all phases of their work.
4. All personnel other than supervisors and principal appraisers shall have received a minimum of 150 hours of in-service training pertaining to their pertaining to their particular phase of work and shall be generally aware of all other phases of the revaluation project before commencing actual work on said project, and a description of the training procedures will accompany the proposal submission.

B. Any requested change in personnel by the Firm during the term of the Agreement and/or the course of the revaluation project shall be submitted in writing to and approved by the BOROUGH Assessor before the change will be implemented.

C. The BOROUGH Assessor may require the Firm to remove any employee or agent of the Firm from work in the revaluation program, if in the sole opinion of the Assessor, that person is incompetent or negligent in the performance of his duties, or is guilty of misconduct or improper behavior. Such employee or agent of the Firm shall not perform any further work in connection with the revaluation project without the prior written approval of the Assessor.

D. Additional Requirements - the Firm shall also submit:

1. A list of municipalities in New Jersey where revaluations have been performed over the past five years and the number of tax appeals filed in each of those municipalities for the three year period subsequent to the completion of the revaluation. The list of tax appeals shall include detail regarding property class, venue in which the appeal was filed, and the percent of appeals that were sustained by the municipality.
2. The names and addresses of the Firm's officers and the number of years each officer has been engaged in real property valuation. Please include copies of their resumes which shall include their past employers and their job titles and responsibilities.
3. The resume of the company representative responsible for supervising this project, as well as any other supervisory staff.
4. Resumes of any key personnel to be involved in the revaluation.
5. Before starting field work, a list of employees, including field personnel, expected to be assigned to the Borough of Carteret's revaluation project and a summary of their experience.
6. A statement of whether any litigation involving the Firm's performance or a revaluation contract has occurred during the past ten years and, if so, explain in detail the nature of such litigation and the results thereof.
7. The name and address of the Firm's parent corporation and subsidiaries, if any.
8. Samples of public relations material.
9. List any litigation resulting from appraisal projects the revaluation firm has been engaged in during the past ten (10) years.
10. All supervisory and field personnel are required to undergo background checks and fingerprinting performed by the Borough of Carteret Police Department.

Revaluation firms shall also include with their proposal the following items:

- Sample form of Progress Reports to be used.
- Sample form of Payment Schedule and/or Monthly Billing Summary.
- Samples of Commercial and Residential Property Record Cards to be used.
- Sample of any other supportive material to be used.

1B.2.1 EXPERIENCE AND CAPITAL REQUIRED

Any firm or entity submitting a Proposal must be experienced in the kind of work required to be performed, have the equipment required and/or have the means to secure it, and have sufficient capital to properly execute the work within the time allowed.

1B.2.2 PAST PERFORMANCE

Documented past performance of same and/or similar service.

1B.2.3 REFERENCES

References and record of success of same or similar service

1B.2.4 DESCRIPTION OF ABILITIES

Description of ability to provide the services in a timely fashion (including staffing, familiarity and location of key staff).

1B.2.5 COST DETAILS

If applicable, cost details including the hourly rates of each of the individuals who will be performing services, and all expenses.

1B.2.6 TECHNICAL PROCESS AND EQUIPMENT

Description of technical process and equipment used in performing the task(s).

1B.3 PREPARATION OF SUBMISSIONS

1B.3.1 COMPLETION OF SUBMISSIONS

Each submission must be provided on a Standardized Submission Form as supplied in the submission package and signed by the entity or principal thereof and shall contain the name, address, and telephone number. All prices and amounts must be written in ink or preferably typewritten. All erasures or corrections must be initialed by each signatory to the submission. Each submission shall be contained in a sealed envelope addressed to the Purchasing Agent, Borough of Carteret, 100 Cooke Avenue, Carteret, New Jersey 07008 and said envelope shall specify the item for which the submission is provided and must be delivered at the place and time required or mailed so as to be received prior to the opening time set in the advertisement. Submissions received after the hour herein named or in unsealed envelopes shall not be considered.

The Owner will not be responsible for submissions forwarded through the U.S. Mail if lost in transit at any time before submission opening, or if hand-delivered to incorrect location.

The submission shall be accompanied by (1) a Non-Collusion Affidavit, (2) a Disclosure of Ownership Form, (3) an Insurance Requirement Acknowledgement Form, (4) a Mandatory Equal Employment Opportunity Notice Acknowledgement, (5) a copy of the applicable Business Registration Certificate, (6) a Vendor Information Form, (7) a Qualifications Submission Form, and (8) an Acknowledgement of Corrections, Additions or Deletions Form.

All forms listed above, (#1 through #8) shall be completed in their entirety.

1B.3.2 ERRORS IN SUBMISSIONS

If applicable, in the event there is a discrepancy between the unit prices and the extended totals, the unit prices shall govern or if between the correct sums of the extended totals and the total Submission submitted, the correct sum shall govern. Amounts written in words shall govern over the amounts written in numerals.

1B.4 TIME FOR AWARD OF CONTRACT

The contracting unit shall award the contract or reject all submissions within such time as may be specified in the invitation for submission, but in no case more than 60 days, except that the submissions of any entities who consent thereto may, at the request of the contracting unit, be held for consideration for such longer period as may be agreed. When the invitation for submission states that the execution of the contract shall be subject to prior approval by a Federal or State agency or department, the contract shall be awarded or all submissions rejected within five (5) days after the approval by such Federal or State agency or department.

The award of the Contract for this service will not be made unless the necessary funds have been certified by the BOROUGH's Chief Financial Officer in a lawful manner.

1B.5 MODIFICATIONS OF SUBMISSIONS

Any vendor may modify his submission by registered mail at any time prior to the scheduled closing time for receipt of submissions, provided such communication is received by the OWNER prior to the closing time. The communication should not reveal the submission price but should provide the addition to or subtraction from or other modification so that the final price(s) or term(s) will not be known by the OWNER until the sealed submission is opened.

1B.6 REJECTION OF SUBMISSIONS

1B.6.1 MULTIPLE SUBMISSIONS NOT ALLOWED

More than one submission from an individual, a firm or partnership, a corporation or association of principals under the same or different names shall not be considered.

1B.6.2 UNBALANCED SUBMISSIONS

Submissions which are obviously unbalanced may be rejected at the option of the OWNER. In the event that there is a discrepancy between prices written in words and written in figures, prices written in words shall govern. In the event there is a discrepancy between the total amount Bid and the sum of the parts, the corrected sum shall govern. No Bid will be accepted that does not contain a price for every item contained in the Bid Form. Bids that are obviously unbalanced may be rejected by the Owner.

1B.6.3 RIGHT TO REJECT SUBMISSIONS

The right is reserved to reject any or all submissions in whole or in part if not in compliance with the standardized submission requirements.

1B.6.4 METHOD OF AWARD OF SUBMISSIONS

The right is reserved by the Borough of Carteret to award submissions on *a "service by service" basis, "per project" basis, in part or in whole* as determined by the Owner.

1B.6.5 RIGHT TO WAIVE INFORMALITIES RESERVED

The owner expressly reserves the right to waive any informality in any submission, and to accept the submission which, in the OWNER'S judgment, serves its best interests.

1B.7 PAYMENT

Bills are publicly approved every second and fourth Thursday of each month at regular BOROUGH Council meetings. All bills approved at that meeting are paid by checks which are mailed the Friday after the meeting. No checks may be picked up by the vendor.

1B.8 TRANSITIONAL PERIOD:

In the event that a new contract has not been awarded prior to the contract expiration date, it shall be incumbent upon the vendor to continue the contract under the same terms and conditions until a new contract(s) can be completely operational. At no time shall this transition period extend more than ninety (90) days beyond the expiration date of the contract.

1B.9 FACSIMILE DOCUMENTS PROVIDED IN A SUBMISSION:

Under no circumstances, on submission documents requiring authorized signatures, will the OWNER accept documents provided through facsimile machines.

1B.10 CONTRACT COMPLIANCE AND EQUAL EMPLOYMENT OPPORTUNITY IN PUBLIC CONTRACTS

Vendor are required to comply with the requirements of **N.J.S.A. 10:5-31 et seq.** and **N.J.A.C. 17:27 et seq.**

1B.11 GENERAL REQUIREMENTS/INFORMATION

The vendor shall guarantee any or all material and services supplied under these specifications. Defective or inferior items shall be replaced at the expense of the vendor.

It is understood by the vendor that this submission is provided on the basis of standardized submission requirements prepared by BOROUGH OF CARTERET and the fact that any vendor is not familiar with these standardized submission requirements or conditions will not be accepted as an excuse.

NO MINIMUM PAYMENT IS IMPLIED OR GUARANTEED.

BOROUGH OF CARTERET reserves the right to cancel any contract entered into upon thirty (30) days written notice.

1B.12 PERFORMANCE SECURITY.

1B.12.1 SECURITY REQUIRED.

Simultaneously with its delivery of the executed Contract the Contractor shall furnish a surety bond or bonds underwritten by a surety company authorized to transact business in the State of New Jersey with a face value equal to one hundred percent (100%) of the amount of the Proposal as security for faithful performance of this Contract and for the payment of all persons performing labor on the project under this Contract and furnishing materials in connection with this Contract, as specified in the Contract Documents annexed hereto. The surety on such bond or bonds shall be a surety company satisfactory to the owner and subject to the owner's attorney's approval.

The performance bond(s) submitted must be acceptable to the Municipality in both form and financial rating.

All Proposals must contain a Bid Bond and Consent of Surety underwritten by a surety company authorized to transact business in the State of New Jersey.

1B.13 INDEMNIFICATION AGAINST CLAIMS.

The successful Vendor shall indemnify and save the Municipality, its officials, agents and representatives, harmless from and against any and all suits, claims, actions, or judgments for any injury or damage(s) sustained or alleged to have been sustained by any party or parties by or on account of any act, omission or commission of the Vendor, his, its, or their agents or employees, or any such subcontractor of the Vendor, and in case any such action be brought against the Municipality, the Vendor shall immediately take charge and defend same at his, its, or their own cost and expense. The Municipality may, if it is so desired, defend such action and charge the expense of it to the Vendor.

1B.14 PATENT CLAIMS.

The successful Vendor shall protect and save the Municipality harmless from all and every demand for damages, royalties or fees on any patented invention used by it in connection with the supplies furnished under and Contract hereunder and it shall be the duty of the Vendor, if so demanded by the Municipality, to furnish the Municipality with a proper legal release or indemnification from and against all such claims and any or all payments due under such Contract may be withheld from the Vendor until such release or releases are furnished, if the Municipality so elects. The Vendor shall hold harmless the Municipality from any claim for the use of any computer software used without authority, if such a situation occurs.

1B.15 OTHER.

All prices shall be net, including transportation and delivery charges. The Vendor shall guarantee any or all material and services supplied under these specifications. Defective or inferior items shall be replaced at the expense of the Vendor.

If the person and/or firm to whom an award is made shall fail to furnish and deliver the supplies or any item thereof within time specified and allowed the Municipality may cancel as to those supplies which are not furnished and or delivered and may also cancel the remainder of the order and may deduct and retain out of the moneys due, or which may become due to such person or firm from the Municipality, such sum as shall be sufficient to pay the difference between the prices on which the award is made and the prices which the Municipality may or shall be obligated to pay to procure such supplies from other parties, and in addition, usual damages for breach of Contract.

All quotations and Proposals shall be submitted on the Proposal forms attached.

Purchases by the Municipality are exempt from taxation, either State or Municipal and also from Federal taxation, including excise tax. Tax Exemption ID Number will be provided upon request.

F.O.B. destination and placement at locations specified by the Municipality.

It is understood by the Vendor that this Proposal is submitted on the basis of specifications prepared by the Municipality and the fact that any Vendor is not familiar with these specifications or conditions will not be accepted as an excuse.

The Vendor shall complete all forms that are referenced in the "Document Checklist" included earlier in this Request for Proposals package. Several of the forms represent appendices that shall be attached to the Contract should the Vendor be authorized to perform the within work.

1B.16 REVIEW OF PROPOSALS/SELECTION CRITERIA

The evaluation criteria were developed in accordance with the New Jersey Administrative Code 5:34-4.2 and the "Best Practices for Awarding Service Contracts" issued by the State Comptroller.

The following specific factors will be used in reviewing the Proposals and determining which Proposal is most acceptable to the Municipality, price and other factors considered:

A. Qualifications and Experience

1. Experience and reputation of the Firm in revaluation of real property.
2. Experience of the Firm in performing revaluations for municipalities similar in size and scope to the Borough of Carteret
3. Qualifications of the individuals who will perform the required services, and their respective participation.
4. Experience of the individuals as it relates to the particular expertise required to perform the contract.
5. Experience with or specific knowledge of the Borough of Carteret as it pertains to this contract.
6. References.

B. Knowledge and Technical Competence

1. Ability of the Firm to perform the services on a timely basis, including staffing and familiarity with the subject matter.
2. Training recommendations and methodology from Assessor's office and other BOROUGH staff.
3. Compatibility of software programs with the BOROUGH's software programs and computer system
4. Work Plan: onsite presence during the revaluation process, frequency of progress updates with town personnel.
5. Overall confidence that the Firm can produce a quality revaluation within the established time frame.

C. Conflicts

1. A list of towns for which the Firm is or may be conducting a revaluation at the same time as Borough of Carteret
2. Tax Appeals of Borough of Carteret properties (if Firm has represented Borough of Carteret taxpayers).
3. Ongoing litigation/past litigation within the past five (5) years.

D. Public Relations

1. Quality and content of marketing/information material samples provided for all aspects of public relations including but not limited to mailings, public presentations, support of BOROUGH's website relating to revaluation.

E. Post Tax Evaluation Process

1. Appeal rate (number of appeals and percentage of appeals versus total units), staffing (support of appeals), and percentage of defensible appeals.

F. Cost consideration

1. Includes but is not limited to fee schedule to be charged and fees paid by public entities of similar size and composition for comparable level of services.

G. Formal Interview

1. If needed, with the Tax Assessor, BOROUGH Manager, and Governing Body prior to the final selection by the BOROUGH Council.

Respondents to this RFP will first be scored on items A through F above for a total score of 90%. The BOROUGH will select a maximum of the top three scoring proposals to be interviewed for an additional 10%.

Following receipt, Proposals will be evaluated and ranked by a Review Committee. The Review Committee shall determine the number of points to be awarded to each Vendor for each category from the total number that is available per category. A higher number of points indicates that the Vendor's Proposal, per category, is considered to be more advantageous to the Municipality, and a lower number of points is considered to be less advantageous to the Municipality.

1B.17 CONTRACT

The successful Vendor agrees that it will sign the Contract that is attached hereto and made a part hereof immediately following the Contract award, and that it will comply with all dates referenced therein.

1B.18 INSURANCE REQUIREMENTS

Simultaneously with the execution of the Contract, the successful Vendor shall comply with the insurance requirements specified below.

Certificates of liability and worker's compensation insurance satisfactory to the Municipality shall be filed with the Municipality.

The Certificate of Insurance required herein to be provided to the Municipality shall provide that the Municipality be provided with Notice of Cancellation at least ten (10) days prior to cancellation.

The Municipality shall be named an additional named insured party on all insurance policies.

All of the Vendor's insurance shall contain indemnifying and saving harmless the Municipality and its agents from and against any and all liability of whatever nature arising from the work to be performed under the Contract, including reasonable attorney's fees and costs in connection with the defense of such claims. The Certification of Insurance furnished by the Vendor shall state specifically that the above indemnification is guaranteed by the policy. Such statement, if not included in the body of the policy, will be typed on the face or back of the certificate.

The minimum amounts of insurance to be carried by the Vendor shall be as follows:

1. WORKER'S COMPENSATION & EMPLOYERS LIABILITY INSURANCE.

The Vendor shall take out and maintain during the life of the Contract adequate worker's compensation and employer's liability insurance for all employees employed in connection with the work, and in case any work is sublet, the Vendor shall require each sub-Contractor similarly to provide worker's compensation and employer's liability insurance for the latter's employees, unless such employees

are covered by the protection afforded by the Vendor's insurance.

Coverage A shall be New Jersey Statutory.
Coverage B (Employer's Liability) shall be unlimited as per the New Jersey Worker's Compensation Law.

2. COMPREHENSIVE GENERAL LIABILITY INSURANCE.

Limits shall be a minimum of $1,000,000 bodily injury per person and $1,000,000 per occurrence, and $250,000 property damage coverage. The Certificate of Insurance must indicate coverage at the above limits for:

A. Contractually-indicated on the face of the Certificate as being in accordance with the specifications.
B. Independent Contractors (if any).
C. Completed Operations.

3. COMPREHENSIVE AUTOMOBILE LIABILITY INSURANCE.

Limits shall be a minimum of $1,000,000 bodily injury per person and $1,000,000 per occurrence, and $250,000 for property damage coverage. The Certificate of Insurance must indicate coverage at the above limits for:

A. Hired Vehicles.
B. Non-Owned Vehicles.

CERTIFICATE OF INSURANCE MUST INDICATE THAT THE BOROUGH OF CARTERET HAS BEEN NAMED AS AN ADDITIONAL NAMED INSURED FOR THIS CONTRACT.

EXHIBIT A
MANDATORY EQUAL EMPLOYMENT OPPORTUNITY LANGUAGE
N.J.S.A. 10:5-31 et seq. (P.L. 1975, C. 127)
N.J.A.C. 17:27
GOODS, PROFESSIONAL SERVICE AND GENERAL SERVICE CONTRACTS

During the performance of this contract, the contractor agrees as follows:

The contractor or subcontractor, where applicable, will not discriminate against any employee or applicant for employment because of age, race, creed, color, national origin, ancestry, marital status, affectional or sexual orientation, gender identity or expression, disability, nationality or sex. Except with respect to affectional or sexual orientation and gender identity or expression, the contractor will ensure that equal employment opportunity is afforded to such applicants in recruitment and employment, and that employees are treated during employment, without regard to their age, race, creed, color, national origin, ancestry, marital status, affectional or sexual orientation, gender identity or expression, disability, nationality or sex. Such equal employment opportunity shall include, but not be limited to the following: employment, upgrading, demotion, or transfer; recruitment or recruitment advertising; layoff or termination; rates of pay or other forms of compensation; and selection for training, including apprenticeship. The contractor agrees to post in conspicuous places, available to employees and applicants for employment, notices to be provided by the Public Agency Compliance Officer setting forth provisions of this nondiscrimination clause.

The contractor or subcontractor, where applicable will, in all solicitations or advertisements for employees placed by or on behalf of the contractor, state that all qualified applicants will receive consideration for employment without regard to age, race, creed, color, national origin, ancestry, marital status, affectional or sexual orientation, gender identity or expression, disability, nationality or sex.

The contractor or subcontractor will send to each labor union, with which it has a collective bargaining agreement, a notice, to be provided by the agency contracting officer, advising the labor union of the contractor's commitments under this chapter and shall post copies of the notice in conspicuous places available to employees and applicants for employment.

The contractor or subcontractor, where applicable, agrees to comply with any regulations promulgated by the Treasurer pursuant to N.J.S.A. 10:5-31 et seq., as amended and supplemented from time to time and the Americans with Disabilities Act.

The contractor or subcontractor agrees to make good faith efforts to meet targeted county employment goals established in accordance with N.J.A.C. l7:27-5.2.

The contractor or subcontractor agrees to inform in writing its appropriate recruitment agencies including, but not limited to, employment agencies, placement bureaus, colleges, universities, and labor unions, that it does not discriminate on the basis of age, race, creed, color, national origin, ancestry, marital status, affectional or sexual orientation, gender identity or expression, disability, nationality or sex, and that it will discontinue the use of any recruitment agency which engages in direct or indirect discriminatory practices.

The contractor or subcontractor agrees to revise any of its testing procedures, if necessary, to assure that all personnel testing conforms with the principles of job-related testing, as established by the statutes and court decisions of the State of New Jersey and as established by applicable Federal law and applicable Federal court decisions.

In conforming with the targeted employment goals, the contractor or subcontractor agrees to review all procedures relating to transfer, upgrading, downgrading and layoff to ensure that all such actions are taken without regard to age, race, creed, color, national origin, ancestry, marital status, affectional or sexual orientation, gender identity or expression, disability, nationality or sex, consistent with the statutes and court decisions of the State of New Jersey, and applicable Federal law and applicable Federal court decisions.

The contractor shall submit to the public agency, after notification of award but prior to execution of a goods and services contract, one of the following three documents:

Letter of Federal Affirmative Action Plan Approval

Certificate of Employee Information Report

Employee Information Report Form AA302 (electronically provided by the Division and distributed to the public agency through the Division's website at ww.state.nj.us/treasury/contract compliance).

The contractor and its subcontractors shall furnish such reports or other documents to the Division of Purchase & Property, CCAU, EEO Monitoring Program as may be requested by the office from time to time in order to carry out the purposes of these regulations, and public agencies shall furnish such information as may be requested by the Division of Purchase & Property, CCAU, EEO Monitoring Program for conducting a compliance investigation pursuant to **Subchapter 10 of the Administrative Code at N.J.A.C. 17:27**.

ATTENTION ALL VENDORS

On June 29, 2004, Governor McGreevey signed P.L. 2004, c.57, Business Registration of Contractors with Government Agencies, into law. Effective September 1, 2004, all business organizations that do business with a local contracting agency (i.e. Borough of Carteret) are required to be registered with the State of New Jersey, Department of Treasury, Division of Revenue, and provide proof of that registration to the contracting agency before the contracting agency may enter into a contract with the business.

A "Business Organization" means an individual, partnership, association, joint stock company, trust, corporation or other legal business entity or successor thereof.

The law provides that: A copy of the Business Registration Certificate issued by the NJ Department of Treasury, Division of Revenue, shall be provided at the time any submission is received; *failure to do so is a fatal defect that cannot be cured*. This law covers construction as well as non-construction submissions.

Further information may be obtained by visiting the following web site at the State of New Jersey:

Goods & Services Contracts (including purchase orders):

N.J.S.A. 52:32-44 imposes the following requirements on contractors and all subcontractors that **knowingly** provide goods or perform services for a contractor fulfilling this contract:

1) the contractor shall provide written notice to its subcontractors and suppliers to submit proof of business registration to the contractor;

2) prior to receipt of final payment from a contracting agency, a contractor must submit to the contracting agency an accurate list of all subcontractors or attest that none was used;

3) during the term of this contract, the contractor and its affiliates shall collect and remit, and shall notify all subcontractors and their affiliates, that they must collect and remit to the Director, New Jersey Division of Taxation, the use tax due pursuant to the Sales and Use Tax Act, (N.J.S.A. 54:32B-1 et seq.) on all sales of tangible personal property delivered into this State.

A contractor, subcontractor or supplier who fails to provide proof of business registration or provides false business registration information shall be liable to a penalty of $25 for each day of violation, not to exceed $50,000 for each business registration not properly provided or maintained under a contract with a contracting agency.

BOROUGH OF CARTERET

AMERICANS WITH DISABILITIES ACT OF 1990
EQUAL OPPORTUNITY FOR INDIVIDUALS WITH DISABILITY

The CONTRACTOR and the BOROUGH OF CARTERET (herein referred to as the Borough) do hereby agree that the provisions of Title 11 of the Americans With Disabilities Act of 1990 (the "Act") (42 U.S.C. S12101 et seg.), which prohibits discrimination on the basis of disability by public entities in all services, programs and activities provided or made available by public entities, and the rules and regulations promulgated pursuant thereunto, are made a part of this contract. In providing any aid, benefit, or service on behalf of the BOROUGH pursuant to this contract, the CONTRACTOR agrees that the performance shall be in strict compliance with the Act. In the event the CONTRACTOR, its agents, servants, employees, or subcontractors violate or are alleged to have violated the Act during the performance of this contract, the CONTRACTOR shall defend the BOROUGH in any action or administrative proceeding commenced pursuant to this Act. The CONTRACTOR shall indemnify, protect, and save harmless the BOROUGH, its agents, servants, and employees from and against any and all suits, claims, losses, demands, or damages of whatever kind or nature arising out of or claimed to arise out of the alleged violation. The CONTRACTOR shall, at its own expense, appear, defend, and pay any and all charges for legal services and any and all costs and other expenses arising from such action or administrative proceeding or incurred in connection therewith. In any and all complaints brought pursuant to the BOROUGH'S grievance procedure, the CONTRACTOR agrees to abide by any decision of the BOROUGH, which is rendered pursuant to, said grievance procedure. If any action or administrative proceeding results in an award of damages against the BOROUGH or if the BOROUGH incurs any expense to cure a violation of the ADA which has been brought pursuant to its grievance procedure, the CONTRACTOR shall satisfy and discharge the same at its own expense.

The BOROUGH shall, as soon as practicable after a claim has been made against it, give written notice thereof to the CONTRACTOR along with full and complete particulars of the claim. If any action or administrative proceeding is brought against the BOROUGH or any of its agents, servants, and employees, the BOROUGH shall expeditiously forward or have forwarded to the CONTRACTOR every demand, complaint, notice, summons, pleading, or other process received by the BOROUGH or its representatives.

It is expressly agreed and understood that any approval by the BOROUGH of the services provided by the CONTRACTOR pursuant to this contract will not relieve the CONTRACTOR of the obligation to comply with the Act and to defend, indemnify, protect, and save harmless the BOROUGH pursuant to this paragraph.

It is further agreed and understood that the BOROUGH assumes no obligation to indemnify or save harmless the CONTRACTOR, its agents, servants, employees and subcontractors for any claim which may arise out of their performance of this Agreement. Furthermore, the CONTRACTOR expressly understands and agrees that the provisions of this indemnification clause shall in no way limit the CONTRACTOR’S obligations assumed in this Agreement, nor shall they be construed to relieve the CONTRACTOR from any liability, nor preclude the BOROUGH from taking any other actions available to it under any other provisions of this Agreement or otherwise at law.

BOROUGH OF CARTERET

PAYMENT POLICY

Payment vouchers with appropriate invoices are publicly approved every second and fourth Thursday of each month at regular BOROUGH Council meetings. All payment vouchers/invoices approved at each meeting are paid by checks which are **mailed** the Friday directly after the meeting. Under **no** circumstances may checks be picked-up by the vendor/contractor.

In order for a payment voucher to be placed on said meetings for approval, they must be submitted fully executed by the vendor/contractor to the appropriate BOROUGH department, be signed by all the appropriate BOROUGH officials and be presented to the **Finance Office** no later than 4:00 p.m., **twelve (12) calendar days** immediately prior to the actual meeting.

This means that the BOROUGH cannot process payment without the certification on the payment voucher that the goods have been received or the services performed. Further, the BOROUGH will not accept any delivery of goods or services **'C.O.D.'**. There are **no** exceptions to these procedural requirements.

APPRENTICESHIP AND TRAINING PROGRAM CERTIFICATION

In accordance with Borough Ordinance #15-15, the undersigned hereby certifies that the Bidder and their subcontractors contracted to perform the following tasks do or will provide or participate in an apprenticeship and training program approved and registered with the U.S. Department of Labor's Bureau of Apprenticeship and Training or a State Apprenticeship Agency to provide craft training for Journeyman and apprentice levels. Bidder must list each respective training program.

Name of Craft Group (as applicable)	Training Program
Air Conditioning and Refrigeration	
Boilermaker	
Bricklayer/Stone Mason	
Carpenter	
Carpenter – Resilient Flooring	
Cement Mason	
Driver	
Drywall Finisher	
Electrician	
Electrician – Tele-data	
Glazier	
Heat and Frost Insulator	
Ironworker	
Laborer – Building	
Laborer – Heavy and General	
Millwright	
Operating Engineer	
Operating Engineer – Field Engineer	
Painter – Line Striping	
Painter – New Construction	
Paperhanger	
Pipefitter	
Plasterer	
Plumber	
Roofer	
Sheet Metal Sign Installation	
Sheet Metal Worker	
Sprinkler Fitter	
Tile Finisher	
Tile Setter – Ceramic	
Tile Setter – Marble	
Tile Setter – Mosaic & Terrazzo	
Truck Driver	
Truck Driver – Material Delivery Driver	
Welder	

NAME: _____

POSITION: _____ (CORPORATE SEAL)

COMPANY: _____

SIGNATURE: _____ DATE: _____

This certificate must be completed executed and submitted with the bid.
Failure to complete execute and submit will result in the bid not being accepted.

SELECTION OF RESPONSIBLE CONTRACTORS

The Owner recognizes that there is a need to ensure that all work on significant public construction and maintenance contracts is performed by responsible, qualified firms that maintain the capacity, expertise, personnel, and other qualifications and resources necessary to successfully perform public contracts in a timely, reliable and cost-effective manner.

In order to effectuate the purpose of selecting responsible contractors for significant public contracts and to protect the Owner's investments in such contracts, prospective contractors and subcontractors should meet applicable standards relating to contractor responsibility, including requirements and criteria concerning technical qualifications, competency, expertise, adequacy of resources, including equipment, financial and personnel, and satisfactory records regarding past project performance, safety, law compliance and business integrity consistent with the Local Public Contracts Law.

Due to the critical impact that skilled construction craft labor has on public works projects and due to the limited availability of skilled construction craft labor and imminent craft labor skill shortages the Owner, as adopted by ordinance, requires contractors and subcontractors to independently, or through agreement with other organizations, provide craft training for journeymen and apprenticeship levels through a bona fide apprenticeship training program approved by and registered with the U.S. Department of Labor, Employment and Training Administration, Office of Apprenticeship Training, Employer and Labor Services, or with a State Apprenticeship Agency recognized by the Office, for the purpose of both promoting successful project delivery and ensuring future workforce development.

The Owner requires compliance with the provisions of this Section by business entities seeking to provide services to the Owner as specified herein. The contents of this Section are intended to supplement, not replace, existing contractor qualifications and performance standards or criteria currently required by law or public policy and as set forth under the Local Public Contracts Law. However, in the event that any of the provisions of this Section conflict with any law or public policy of the Owner or of the Local Public Contracts Law, same shall preempt this Section.

All contractors and subcontractors of any tier that perform work valued at over $100,000 on any public works facility or public works project, including construction, alteration, renovation, repair, service, or maintenance work, are required to comply with this Section.

All firms engaged in contracts covered by this section shall be qualified, responsible contractors or subcontractors that have sufficient capabilities in all respects to successfully perform contracts on which they are engaged, including the necessary experience, equipment, technical skills and qualifications and organizational, financial and personnel resources. Firms bidding on public contracts shall also be required to have a satisfactory past performance record and a satisfactory record of law compliance, integrity and business ethics pursuant to the Local Public Contracts Law under N.J.S.A. 40A:11-1 et seq.

The Contractor shall complete the Schedule A "Apprenticeship and Training Program" bid form attachment for submission with the bid.

The governing body of the Owner shall have the right to disqualify a bidder who would otherwise be determined to be the lowest responsible bidder, if the governing body finds that it has had prior negative experience with the bidder as set forth in the Local Public Contracts Law pursuant to N.J.S.A. 40A:11-4.

BOROUGH OF CARTERET

CHECKLIST – COMPETITIVE CONTRACTING PROCESS

(Pursuant to N.J.S.A. 40A:11-4.3 et. seq.)

Carteret Pier Pavilion At The Carteret Waterfront Park

Submission Date: _____

The following items, as indicated below (XX), shall be provided with the receipt of sealed submissions. Items without (XX) must be submitted prior to award:

Proposal Form to the Borough of Carteret	XX
Bid Bond	XX
Consent of Surety	XX
Non-Collusion Affidavit	
Disclosure of Ownership Form	XX
Insurance Requirement Acknowledgement Form	XX
Mandatory Equal Employment Opportunity Notice Acknowledgement	XX
Qualifications Submission Form	XX
Acknowledgement of Corrections, Additions or Deletions Form	XX
Copy of your Business Registration Certificate as issued by the State of New Jersey, Department of Treasury, Division of Revenue	
Disclosure of Investment Activities in Iran	XX
Performance & Payment Bond	
AIA A101 Contract	
AIA A201 General Conditions	
Naming of Subcontractors Form	XX

NOTES:
1. ANY CORRECTIONS, ADDITIONS OR DELETIONS TO THE FORMS PROVIDED SHALL BE INITIALED AND DATED.
2. DOCUMENTS REFERENCED WITH AN ASTERISK (*) ABOVE ARE NOT INCLUDED AS FORMS THAT ARE PART OF THE WITHIN REQUEST FOR PROPOSALS PACKAGE. ALL VENDORS ARE DIRECTED, HOWEVER, TO PROVIDE THEIR RESPONSES TO THESE ITEMS ON A SEPARATE SHEET(S) OF PAPER TO BE INCLUDED WITH THEIR RESPONSE PACKAGE. EACH ITEM MUST BE SIGNED AND DATED BY AN AUTHORIZED REPRESENTATIVE OF THE VENDOR.

PROPOSAL FORM
BOROUGH OF CARTERET, NEW JERSEY

****PLEASE PUT THE PROPOSAL FORM ON TOP OF THE SUBMITTED BID DOCUMENTS****

Name of

Bidder:_____

Address:_____Phone:_____

Lump Sum Bid for Complete Construction Contract

Date:_____

To: City of Hackensack
65 Central Avenue
County of Bergen
New Jersey (hereinafter referred to as "Owner")

For: CARTERET PEIR PAVILION at the
CARTERET WATERFRONT PARK
Borough of Carteret
DMR Project No.: 5146

The undersigned bidder, in compliance with the Invitation for Bid for the construction of the above referenced project, having examined all documents and the site of the proposed Project, including the availability of materials and labor, hereby proposes to furnish all labor, materials, supplies, equipment, and means of construction required to complete the construction of the Project in accordance with the Drawings and Specifications prepared by DMR Architects and all other contract documents within the time set forth herein, for the lump sum **Base Bid:**

BASE BID:

_____ Dollars ($_____)
Written amount Figures

ADD ALTERNATE NO. 1:
State the cost difference to the Base Bid to provide & install the food service equipment specified on sheet FS1.0 (excluding items 5, 6 & 7) including the associated electrical work and plumbing as specified and shown in the drawings.

_____ Dollars ($_____)
Written amount Figures

ADD ALTERNATE NO. 2:

State the cost difference to the Base Bid to provide & install the bromic infrared heaters including the associated electrical work and controls as specified and shown in the drawings.

_____ Dollars ($_____)

Written amount Figures

ADD ALTERNATE NO. 3:

State the cost difference to the Base Bid to provide & install the bar millwork & countertops including the associated electrical work and plumbing as specified and shown in the drawings.

_____ Dollars ($_____)

Written amount Figures

(Amounts shall be shown in both words and figures. In case of discrepancies, the amounts shown in words will govern).

THE ABOVE AMOUNT INCLUDES ANY ALLOWANCES AS LISTED IN SPEC. SECTION 012100

Contractor further agrees to execute a formal Contract with the Owner for the performance of the aforesaid work.

BOROUGH OF CARTERET – BID BOND FORM

KNOW ALL MEN BY THESE PRESENT, that we, the undersigned, _____

_____ as Principal, and _____

_____, as Surety, are hereby held and firmly bound unto the **BOROUGH OF CARTERET**, 100 Cooke Avenue, Carteret, NJ 07008, as Owner, in the penal sum of _____ (_____) dollars, for the payment of which, well and truly to be made, we hereby jointly and severally bind ourselves, successors and assigns.

Signed, this _____ day of _____, 20_____ .

The condition of the above obligation is such that whereas the Principal has submitted to the **BOROUGH OF CARTERET** a certain bid, attached hereto and hereby made a part hereof, to enter into a contract in writing, for _____

_____

NOW, THEREFORE,

(a) If said bid shall be rejected, or in the alternate,

(b) If said bid shall be accepted and the Principal shall execute and deliver a contract in the form of contract attached hereto (properly completed in accordance with said bid) and shall furnish a bond for his faithful performance of said contract, and for the payment of all persons performing labor or furnishing materials in connection therewith, and shall in all other respects perform the agreement created by the acceptance of said bid,

Then this obligation shall be void, otherwise the same shall remain in full force and effect; it being expressly understood and agreed that the liability of the Surety for any and all claims hereunder shall, in no event, exceed the penal amount of this obligation as herein stated.

The Surety, for value received, hereby stipulates and agrees that the obligation of said Surety and its bond shall be in no way impaired or affected by any extension of the time within which the Owner may accept such bid; and said Surety does hereby waive notice of any such extension.

IN WITNESS WHEREOF, the Principal and the Surety have hereunto set their hands and seals, and such of them as are corporations have caused their corporate seals to be hereto affixed and these presents to be signed by their proper officers, the day and year first set forth above.

BY: _____
Witness

BY: _____
Principal

BY: _____
Witness

BY: _____
Attorney-in-fact

Surety Phone No. _____

BOROUGH OF CARTERET
IMPORTANT BIDDER INFORMATION
RE: BID BONDS

The Borough of Carteret will not accept any Bid Bonds with wording in their content that is contrary to the intention of the *Local Public Contracts Law*, specifically designation **40A:11-21** which reads as follows:

GUARANTEE TO BE FURNISHED WITH BID:

A person bidding on a contract for the erection, alteration or repair of a public building, structure, facility or other improvement to real property, the total price of which exceeds $100,000.00, shall furnish a guarantee as provided for herein. A contracting unit may provide that a person bidding on any other contract, advertised in accordance with law, shall furnish a guarantee as provided for herein. The guarantee shall be payable to the contracting unit so that if the contract is awarded to the bidder, the bidder will enter into a contract therefore and will furnish any performance bond or other security required as a guarantee of indemnification. The guarantee shall be in the amount of 10% percent of the bid, but not in excess of $20,000.00, except as otherwise provided herein, and may be given, at option of the bidder, by certified check, cashier's check or bid bond. In the event that any law or regulation of the United States imposes any condition upon the awarding of a monetary grant to any contracting unit, which condition requires the depositing of a guarantee in an amount other than 10% of the bid or in excess of $20,000.00, the provisions of this section shall not apply and the requirements of the law or regulation of the United States shall govern.

More specifically, those bid bonds which contain restrictive language regarding the bonds' intent will be considered **NON-CONFORMING** by the Borough of Carteret.

BOROUGH OF CARTERET

CONSENT OF SURETY

KNOW ALL MEN BY THESE PRESENTS, that for and in consideration of the sum of $1.00, lawful money of the United States of America, the receipt whereof is hereby acknowledged, paid the undersigned corporation, and for other valuable consideration, the _____ organized and existing under the laws of the State of _____ certifies and agrees, that if contract for _____ _____ is awarded to _____ _____, the undersigned Corporation will execute the bond or bonds as required of the contract documents and will become Surety in the full amount set forth in the contract documents for the faithful performance of all obligations of the Contractor.

Signed and sealed this _____ day of _____, _____

_____

Attorney-in-Fact, _____

BOROUGH OF CARTERET

NON-COLLUSION AFFIDAVIT

STATE OF NEW JERSEY :
: SS.
COUNTY OF :

I, _____ of the _____ of _____

in the County of _____ and the State of New Jersey, of full age, being duly sworn according to law

on my oath depose and say that:

I am _____

of the firm of _____

the Vendor making the submission for the above named Service, and that I executed the said submission with full authority to do so; that said Vendor has not, directly or indirectly, entered into any agreements, participated in any collusion, or otherwise taken any action in restraint of fair and open competition in connection with the above named Service; and that all statements contained in said submission and in this affidavit are true and correct, and made with full knowledge that the Borough of Carteret relies upon the truth of the statements contained in said submission and in the statements contained in this affidavit in awarding the contract for said Service.

I further warrant that no person or selling agency has been employed or retained to solicit or secure such contract upon an agreement or understanding for a commission, percentage, brokerage or contingent fee, except bonafide employees or bonafide establishment, commercial or selling agencies maintained by:

_____.
Name of Vendor

Subscribed and sworn to before me

this _____ day of _____, 20____

_____

Notary Public, State of_____
(Signature of Vendor)

My Commission expires_____
(Type or Print name of affiant and Title, under signature)

STATEMENT OF OWNERSHIP DISCLOSURE

N.J.S.A. 52:25-24.2 (P.L. 1977, c.33, as amended by P.L. 2016, c.43)

This statement shall be completed, certified to, and included with all bid and proposal submissions. Failure to submit the required information is cause for automatic rejection of the bid or proposal.

Name of Organization: _____

Organization Address: _____

Part I Check the box that represents the type of business organization:

☐ Sole Proprietorship (skip Parts II and III, execute certification in Part IV)

☐ Non-Profit Corporation (skip Parts II and III, execute certification in Part IV)

☐ For-Profit Corporation (any type) ☐ Limited Liability Company (LLC)

☐ Partnership ☐ Limited Partnership ☐ Limited Liability Partnership (LLP)

☐ Other (be specific): _____

Part II

☐ The list below contains the names and addresses of all stockholders in the corporation who own 10 percent or more of its stock, of any class, or of all individual partners in the partnership who own a 10 percent or greater interest therein, or of all members in the limited liability company who own a 10 percent or greater interest therein, as the case may be. (**COMPLETE THE LIST BELOW IN THIS SECTION**)

OR

☐ No one stockholder in the corporation owns 10 percent or more of its stock, of any class, or no individual partner in the partnership owns a 10 percent or greater interest therein, or no member in the limited liability company owns a 10 percent or greater interest therein, as the case may be. (**SKIP TO PART IV**)

(Please attach additional sheets if more space is needed):

Name of Individual or Business Entity	Home Address (for Individuals) or Business Address

Part III DISCLOSURE OF 10% OR GREATER OWNERSHIP IN THE STOCKHOLDERS, PARTNERS OR LLC MEMBERS LISTED IN PART II

If a bidder has a direct or indirect parent entity which is publicly traded, and any person holds a 10 percent or greater beneficial interest in the publicly traded parent entity as of the last annual federal Security and Exchange Commission (SEC) or foreign equivalent filing, ownership disclosure can be met by providing links to the website(s) containing the last annual filing(s) with the federal Securities and Exchange Commission (or foreign equivalent) that contain the name and address of each person holding a 10% or greater beneficial interest in the publicly traded parent entity, along with the relevant page numbers of the filing(s) that contain the information on each such person. **Attach additional sheets if more space is needed**.

Website (URL) containing the last annual SEC (or foreign equivalent) filing	Page #'s

Please list the names and addresses of each stockholder, partner or member owning a 10 percent or greater interest in any corresponding corporation, partnership and/or limited liability company (LLC) listed in Part II **other than for any publicly traded parent entities referenced above**. The disclosure shall be continued until names and addresses of every noncorporate stockholder, and individual partner, and member exceeding the 10 percent ownership criteria established pursuant to N.J.S.A. 52:25-24.2 has been listed. **Attach additional sheets if more space is needed.**

Stockholder/Partner/Member and Corresponding Entity Listed in Part II	Home Address (for Individuals) or Business Address

Part IV Certification

I, being duly sworn upon my oath, hereby represent that the foregoing information and any attachments thereto to the best of my knowledge are true and complete. I acknowledge: that I am authorized to execute this certification on behalf of the bidder/proposer; that the ***Borough of Carteret*** is relying on the information contained herein and that I am under a continuing obligation from the date of this certification through the completion of any contracts with ***Borough of Carteret*** to notify the ***Borough of Carteret*** in writing of any changes to the information contained herein; that I am aware that it is a criminal offense to make a false statement or misrepresentation in this certification, and if I do so, I am subject to criminal prosecution under the law and that it will constitute a material breach of my agreement(s) with the, permitting the ***Borough of Carteret*** to declare any contract(s) resulting from this certification void and unenforceable.

Full Name (Print):		Title:	
Signature:		Date:	

BOROUGH OF CARTERET

INSURANCE REQUIREMENTS and ACKNOWLEDGEMENT FORM

FAIR & OPEN PUBLIC SOLICITATION PROCESS pursuant to N.J.S.A. 19:44A-20.5 et. seq.

Certificate(s) of Insurance for Liability, Workmen's Compensation and Professional Liability Insurance, satisfactory to the Borough of Carteret, shall be filed with the BOROUGH Purchasing Division upon award of contract by the BOROUGH Council.

The minimum amounts of insurance to be carried by the Vendor shall be as follows:

1. WORKMEN'S COMPENSATION & EMPLOYERS LIABILITY INSURANCE

The Vendor shall take out and maintain during the life of the contract adequate workmen's compensation and employer's liability insurance for all employees employed in connection with the work, and in case any work is sublet, the Vendor shall require each sub-contractor similarly to provide workmen's compensation and employer's liability insurance for the latter's employees, unless such employees are covered by the protection afforded by the Vendor's insurance.

Coverage A shall be New Jersey Statutory
Coverage B (Employer's Liability) shall be unlimited as per New Jersey Workmen's Compensation Law

2. COMPREHENSIVE GENERAL LIABILITY INSURANCE

Limits shall be a minimum of $1,000,000.00 bodily injury and property damage combined. The Certificate of Insurance must indicate coverage at the above limits for:

A. Contractual indicated on the face of the Certificate as being in accordance with the standardized submission requirements.
B. Independent Contractors (if any)
C. Completed Operations

3. COMPREHENSIVE AUTOMOBILE LIABILITY

Limits shall be a minimum of $1,000,000.00 bodily injury and property damage combined. The Certificate of Insurance must indicate coverage at the above limits for:

(A.) Hired Vehicles
(B.) Non-Owned Vehicles.

4. PROFESSIONAL LIABILITY INSURANCE

Limits shall be a minimum of $1,000,000.00 for each claim and $1,000,000.00 aggregate each policy period.

Acknowledgement of Insurance Requirement:

_____ _____
(Signature) (Date)

_____
(Printed Name and Title)

BOROUGH OF CARTERET

MANDATORY EQUAL EMPLOYMENT OPPORTUNITY NOTICE
N.J.S.A. 10:5-31 et seq. and N.J.A.C. 17:27 et seq.

GOODS, PROFESSIONAL SERVICES AND GENERAL SERVICE CONTRACTS

This form is a summary of the successful vendor's requirement to comply with the requirements of **N.J.S.A. 10:5-31 et seq.** and **N.J.A.C. 17:27 et seq.**

The successful vendor shall submit to the Borough of Carteret, after notification of award but prior to execution of this contract, one of the following three documents as forms of evidence:

(a) A photocopy of a valid letter that the vendor is operating under an existing Federally approved or sanctioned affirmative action program (good for one year from the date of the letter);

OR

(b) A photocopy of a Certificate of Employee Information Report approval, issued in accordance with N.J.A.C. 17:27-1.1 et seq.;

OR

(c) A photocopy of an Employee Information Report (Form AA302) provided by the Division of Contract Compliance and distributed to the Borough of Carteret to be completed by the vendor in accordance with N.J.A.C. 17:27-1.1 et seq.

The successful vendor may obtain the Employee Information Report (AA302) from the Borough of Carteret during normal business hours.

The successful vendor must submit the white and canary copies of the AA302 (Employee Information Report) to the Division of Contract Compliance and Equal Employment Opportunity in Public Contracts (Division). The pink *Public Agency* copy is submitted to the Borough of Carteret, and the gold *Vendor* copy is retained by the vendor.

The undersigned vendor certifies that he/she is aware of the commitment to comply with the requirements of N.J.S.A. 10:5-31 et seq. and N.J.A.C. 17:27 et seq. and agrees to furnish the required forms of evidence.

The undersigned vendor further understands that his/her submission shall be rejected as non-responsive if said vendor fails to comply with the requirements of N.J.S.A. 10:5-31 et seq. and N.J.A.C. 17:27 et seq.

COMPANY: _____

SIGNATURE: _____ PRINT NAME: _____

TITLE: _____ DATE: _____

BOROUGH OF CARTERET

QUALIFICATIONS

The Vendor is required to state in detail, in the space provided below, the following: (**insert additional pages as needed**)

1. All work that the Vendor has performed that is similar in size, nature and scope to the proposed work and the dates of completion of same;

2. References and such other detailed information that will enable the Municipality to judge the Vendor's responsibility, experience, skill and financial standing;

3. Evidence that the Vendor maintains a permanent place of business and state how many years your organization has been in business as a Firm under your present name;

4. Have you ever failed to complete any work awarded to you? Have lawsuits of any kind been filed with respect to any of your contracts? Has any officer or partner of your organization ever failed to complete a contract handled in his own name? Provide details.

5. List all contracts which you are now performing or for which you have signed contracts but not started work;

6. A listing of equipment available to the Vendor for the work under the proposed Contract;

7. Evidence that the Vendor has suitable financial status to meet obligations incidental to the work; and

8. Evidence that the Vendor has appropriate technical experience to complete the work.

_____

_____

_____

_____

_____

_____

_____

Company _____

Signature _____ Title _____

Print Name _____

Date _____

BOROUGH OF CARTERET

ACKNOWLEDGEMENT OF CORRECTIONS, ADDITIONS AND DELETIONS FORM

Fair and Open Solicitation Process pursuant to N.J.S.A. 19:44A-20.5 et. seq.

I, _____

of the firm _____

hereby acknowledge that any corrections, additions and/or deletions

have been initialed and dated in this Submission Package.

_____
(Signature)

_____
(Type or Print name of affiant and Title, under signature)

_____
(Date)

State of New Jersey Division of Purchase and Property

Prohibited Russia-Belarus Activities & Iran Investment Activities

Person or Entity	

Part 1: Certification

COMPLETE PART 1 BY CHECKING **ONE OF THE THREE BOXES BELOW**

Pursuant to law, any person or entity that is a successful bidder or proposer, or otherwise proposes to enter into or renew a contract, for goods or services must complete the certification below prior to contract award to attest, under penalty of perjury, that neither the person or entity, nor any parent entity, subsidiary, or affiliate, is identified on the Department of Treasury's Russia-Belarus list or Chapter 25 list as a person or entity engaging in prohibited activities in Russia, Belarus or Iran. Before a contract for goods or services can be amended or extended, a person or entity must certify that neither the person or entity, nor any parent entity, subsidiary, or affiliate, is identified on the Department of Treasury's Russia-Belarus list. Both lists are found on Treasury's website at the following web addresses:

https://www.nj.gov/treasury/administration/pdf/RussiaBelarusEntityList.pdf
www.state.nj.us/treasury/purchase/pdf/Chapter25List.pdf.

As applicable to the type of contract, the above-referenced lists must be reviewed prior to completing the below certification.

A person or entity unable to make the certification must provide a detailed, accurate, and precise description of the activities of the person or entity, or of a parent entity, subsidiary, or affiliate, engaging in prohibited activities in Russia or Belarus and/or investment activities in Iran. The person or entity must cease engaging in any prohibited activities and provide an updated certification before the contract can be entered into.

If a vendor or contractor is found to be in violation of law, action may be taken as appropriate and as may be provided by law, rule, or contract, including but not limited to imposing sanctions, seeking compliance, recovering damages, declaring the party in default, and seeking debarment or suspension of the party.

CONTRACT AWARDS AND RENEWALS

☐	*I certify, pursuant to law, that neither the person or entity listed above, nor any parent entity, subsidiary, or affiliate appears on the N.J. Department of Treasury's lists of entities engaged in prohibited activities in Russia or Belarus pursuant to P.L. 2022, c. 3 or in investment activities in Iran pursuant to P.L. 2012, c. 25 ("Chapter 25 List"). I further certify that I am the person listed above, or I am an officer or representative of the entity listed above and am authorized to make this certification on its behalf.* (Skip Part 2 and sign and complete the Certification below.)

CONTRACT AMENDMENTS AND EXTENSIONS	
☐	*I certify, pursuant to law, that neither the person or entity listed above, nor any parent entity, subsidiary, or affiliate is listed on the N.J. Department of the Treasury's lists of entities determined to be engaged in prohibited activities in Russia or Belarus pursuant to P.L. 2022, c. 3. I further certify that I am the person listed above, or I am an officer or representative of the entity listed above and am authorized to make this certification on its behalf.* (Skip Part 2 and sign and complete the Certification below.)
IF UNABLE TO CERTIFY	
☐	*I am unable to certify as above because the person or entity and/or a parent entity, subsidiary, or affiliate is listed on the Department's Russia-Belarus list and/or Chapter 25 Iran list. I will provide a detailed, accurate, and precise description of the activities as directed in Part 2 below, and sign and complete the Certification below. Failure to provide such will prevent the award of the contract to the person or entity, and appropriate penalties, fines, and/or sanctions will be assessed as provided by law.*

Part 2: Additional Information

PLEASE PROVIDE FURTHER INFORMATION RELATED TO PROHIBITED ACTIVITIES IN RUSSIA OR BELARUS AND/OR INVESTMENT ACTIVITIES IN IRAN.

You must provide a detailed, accurate, and precise description of the activities of the person or entity, or of a parent entity, subsidiary, or affiliate, engaging in prohibited activities in Russia or Belarus and/or investment activities in Iran in the space below and, if needed, on additional sheets provided by you.

Part 3: Certification of True and Complete Information

I, being duly sworn upon my oath, hereby represent and state that the foregoing information and any attachments there, to the best of my knowledge, are true and complete. I attest that I am authorized to execute this certification on behalf of the above-referenced person or entity.

I acknowledge that the Borough is relying on the information contained herein and hereby acknowledge that I am under a continuing obligation from the date of this certification through the completion of any contracts with the Contracting Unit to notify the Contracting Unit in writing of any changes to the answers of information contained herein.

I acknowledge that I am aware that it is a criminal offense to make a false statement or misrepresentation in this certification. If I do so, I recognize that I am subject to criminal prosecution under the law and that it will also constitute a material breach of my agreement(s) with the Contracting Unit and that the Contracting Unit at its option may declare any contract(s) resulting from this certification void and unenforceable.

Full Name (Print)		**Title**	
Signature		**Date**	

STATUTORY PERFORMANCE AND PAYMENT BOND

KNOWN ALL MEN BY THESE PRESENTS, that we the undersigned,

_____

Name of Principal

_____

Address of Principal

as Principal, and,

_____

(NAME OF SURETY)

_____

(ADDRESS OF SURETY)

as Surety, are hereby held and firmly bound unto the

BOROUGH OF CARTERET
(Owner)
100 COOKE AVENUE, CARTERET, NJ 07008

in the penal sum of $_____ for the payment of which well and truly to be made, we hereby jointly and severally bind ourselves, our heirs, executors, administrators, successors, and assigns.

Signed this _____ day of _____, 20____.

THE CONDITION OF THE ABOVE OBLIGATION is such that whereas, the above named Principal did on the _____day of _____, 20____ enter into a contract with the **Borough of Carteret,** which said contract is made a part of this bond as though fully set forth herein;

NOW, if the said Principal shall well and faithfully do and perform the things agreed by the Principal to be done and performed according to the terms of said contract, and shall pay all lawful claims of subcontractors, materialmen, laborers, persons, firms or corporations for labor performed or materials, provisions, provender or other supplies or teams, fuels, oils, implements or machinery furnished, used or consumed in the carrying forward, performing or completing of said contract; we agreeing and assenting that this undertaking shall be for the benefit of any subcontractor, materialman, laborer, person, firm or corporation having a just claim, as well as for the obligee herein; then this obligation shall be void; otherwise the same shall remain in full force and effect; it being expressly understood and agreed that the liability of the Surety for any and all claims hereunder shall in no event exceed the penal amount of

this obligation as herein stated.

The said Surety hereby stipulates and agrees that no modifications, omissions or additions in or to the terms of the said contract or in the plans or specifications therefor shall in any way affect the obligation of said Surety on its bond.

Recovery of any claimant under the bond shall be subject to the conditions and provisions of N.J.S.A. 2A:44-143 et. seq to the same extent as if such conditions and provisions were fully incorporated in the form set forth herein.

This bond is given in compliance with the requirements of the statutes of the State of New Jersey in respect to bonds of contractors on public works, N.J.S.A. 2A:44-143 to -147 and amendments thereof, and liability thereunder is limited as in said statutes provided.

SIGNED SEALED AND DELIVERED
IN THE PRESENCE OF:

_____
Principal

Attest:

_____ By _____

Attest:

_____
Surety Company

_____ By _____

NOTES:

1. The date of the Bond shall not be earlier than the date of the agreement.
2. The Surety company shall be authorized to transact business in New Jersey and have sufficient resources to issue the bond.
3. If Contractor is a partnership, all partners shall execute the bond.

IN WITNESS WHEREOF, this instrument is executed in four counterparts, each one of which shall be deemed an original, this

_____day of _____, 20_____ .

ATTEST:

_____
Principal (Contractor)

_____
(Principal) Secretary

By: _____(s)

(SEAL)

_____
(Typed Name)

_____
(Witness as to Principal)

_____
(Address)

_____
(Address)

_____

ATTEST:

_____
(Surety)

_____
(Surety) Secretary

By: _____

_____
(Typed Name)

(SEAL)

_____
(Witness to Surety)

_____
(Address)

_____
(Address)

_____

NOTE: Date of Bond must not be prior to date of contract. If Contractor is a partnership, all partners must execute bond. A corporate acknowledgment and statement of authority shall be attached by the Surety.

NOTICE REGARDING BUSINESS ENTITIES WHICH RECEIVE, IN THE AGGREGATE, $50,000.00 OR MORE FROM PUBLIC ENTITIES DURING A CALENDAR YEAR

A business entity which has received $50,000.00 or more in the aggregate during a calendar year through agreements or contracts with a public entity or public entities is required by state law to file an additional statement with the New Jersey Election Law Enforcement Commission. The form is to be filed electronically. The form maybe found at: www.elec.state.nj.us. For further information, contact the New Jersey Election Law Enforcement Commission at (609) 292-8700 or toll free in New Jersey 1-888-313-ELEC (3532).

NAMING OF SUBCONTRACTORS FORM

ALL CONTRACTORS MUST COMPLETE THE FOLLOWING:

N.J.S.A. 40A:11-16 requires that where all the work and materials required to complete the construction project are to be included in a single overall contract, bidders that propose using subcontractors for any of the four specialized "sub-prime" categories {i.e. Plumbing and gas fitting and all kindred work; Steam and hot water heating, ventilating apparatus, steam power plants and kindred work (HVAC); Electrical work; and Structural steel and ornamental iron work) must submit a certificate with their bids listing each subcontractor named in the bid for that category.

If _____ is successfully awarded this
(Name of Firm)
project, I, _____.
(Authorized Representative)
of the City of _____,in the County of _____and State of _____,certify pursuant to N.J.S.A. 40A:11-16 that I shall utilize the following subcontractors if this Bid is successfully awarded to my firm.

NAME Of SUBCONTRACTOR **SCOPE OF WORK**

C029-Structural Steel

_____

C030-Plumbing

_____

C032-HVACR

_____

C047-Electrical

_____

_____

_____

_____

(Use additional sheet of paper if more space required)

_____
Signature of Bidder

_____
Name and Title (Print or Type)

SWORN TO AND SUBSCRIBED
BEFORE ME THIS _____DAY
OF _____ 20___

WAGE RATE REQUIREMENTS

PART 1 - PREVAILING WAGE RATES

A. In accordance with The New Jersey Prevailing Wage Act (N.J.S.A. 34:11-56.25 et seq.), each Contractor and Subcontractor shall comply with the following:

1. Pay to all workmen engaged in the performance of services directly upon the work not less than the prevailing rates of wages.

2. Before each Application for Payment, furnish the Owner with an affidavit stating that all workmen have been paid the prevailing rate of wages.

3. Keep an accurate record showing the name, craft, or trade and actual hourly rate of wages paid to each workman employed by him in connection with this work. Preserve records for 2 years from date of payment.

4. Upon request, the Contractor and Subcontractor shall file written statements certifying to the amounts then due and owing to any and all workmen for wages due on account of the work. The statement shall set forth the names of the person whose wages are unpaid and the amount due to each. The statements shall be verified by the oaths of the Contractor or Subcontractor, as the case may be.

5. Post the prevailing wage rates for each craft and classification involved in the work, including the effective date of any changes thereof, in prominent and easily accessible places at the site of the work and at such place, or places as used to pay workmen their wages.

B. The current prevailing wage rates, as applicable for this Project, are to be obtained by the Bidder. Registration Application forms and copies of the "The Public Works Contractor Registration Act" may be obtained by contacting:

Contractor Registration Unit, New Jersey Department of Labor, Division of Wage and Hour Compliance, PO Box 389, Trenton, NJ 08625

Telephone – (609) 292-9464, fax (609) 633-8591

END OF SECTION 001360

STATE OF NEW JERSEY
Department of Labor and Workforce Development
Division of Wage and Hour Compliance - Public Contracts Section
PO Box 389
Trenton, NJ 08625-0389

PREVAILING WAGE RATE DETERMINATION

The New Jersey Prevailing Wage Act (N.J.S.A. 34:11-56.25 et seq.) requires that the Department of Labor and Workforce Development establish and enforce a prevailing wage level for workers engaged in public works in order to safeguard their efficiency and general well being and to protect them as well as their employers from the effects of serious and unfair competition.

Prevailing wage rates are wage and fringe benefit rates based on the collective bargaining agreements established for a particular craft or trade in the locality in which the public work is performed. In New Jersey, these rates vary by county and by the type of work performed.

Applicable prevailing wage rates are those wages and fringe benefits in effect on the date the contract is awarded. All pre-determined rate increases listed at the time the contract is awarded must also be paid, beginning on the dates specified. Rates that have expired will remain in effect until new rates are posted.

Prevailing Wage Rate

The prevailing wage rate for each craft will list the effective date of the rate and the following information:

W = Wage Rate per Hour **B** = Fringe Benefit Rate per Hour* **T** = Total Rate per Hour

* Fringe benefits are an integral part of the prevailing wage rate. Employers not providing such benefits must pay the fringe benefit amount directly to the employee each payday. Employers providing benefits worth less than the fringe benefit amount must pay the balance directly to the employee each payday.

Unless otherwise stated in the Prevailing Wage Rate Determination, the fringe benefit rate for overtime hours remains at the straight time rate.

When the Overtime Notes in the Prevailing Wage Rate Determination state that the overtime rates are "inclusive of benefits," the benefit rate is increased by the same factor as the wage rate (i.e. multiplied by 1.5 for time and one-half, multiplied by 2 for double time, etc.).

Apprentice Rate Schedule

An “apprentice” is an individual who is registered with the United States Department of Labor - Office of Apprenticeship and enrolled in a certified apprenticeship program during the period in which they are working on the public works project.

The apprentice wage rate is a percentage of the journeyman wage rate, unless otherwise indicated. The apprentice benefit rate is the full journeyman benefit rate, unless otherwise indicated.

If there is no apprentice rate schedule listed, the individual must be paid at least the journeyman rate even if that individual is in a certified apprentice program for that trade.

If there is no ratio of apprentices to journeymen listed for a particular craft, then the ratio shall be one (1) apprentice to every four (4) journeymen.

Comments/Notes

For each craft listed there will be comments/notes that cover the definition of the regular workday, shift differentials, overtime, recognized holidays, and any other relevant information.

Public Works Contractor Registration

The Public Works Contractor Registration Act (N.J.S.A. 34:11-56.48, et seq.) requires that **all** contractors, subcontractors, or lower tier subcontractors who are working on or who bid on public works projects register with the Department of Labor and Workforce Development. Applications are available at *www.nj.gov/labor* (click on Wage & Hour and then go to Registration & Permits).

Pursuant to N.J.S.A. 34:11-56.51:

No contractor shall bid on any contract for public work as defined in section 2 of P.L.1963, c. 150 (C.34:11-56.26) unless the contractor is registered pursuant to this act. No contractor shall list a subcontractor in a bid proposal for the contract unless the subcontractor is registered pursuant to P.L.1999, c.238 (C.34:11-56.48 et seq.) at the time the bid is made. No contractor or subcontractor, including a subcontractor not listed in the bid proposal, shall engage in the performance of any public work subject to the contract, unless the contractor or subcontractor is registered pursuant to that act.

Snow Plowing

Snow plowing contracts are <u>not</u> subject to the New Jersey Prevailing Wage Act or the Public Works Contractor Registration Act.

NEW JERSEY DEPARTMENT OF LABOR AND WORKFORCE DEVELOPMENT

PREVAILING WAGE RATE DETERMINATION

County - MIDDLESEX

Craft: Air Conditioning & Refrigeration - Service and Repair **PREVAILING WAGE RATE**

	03/01/22
Journeyman (Mechanic)	W42.98 B27.48 T70.46

Craft: Air Conditioning & Refrigeration - Service and Repair **APPRENTICE RATE SCHEDULE**

INTERVAL	PERIOD AND RATES									
As Shown	1st Year	2nd Year	3rd Year	4th Year	5th Year	Wage = %	of Jnymn	Wage		
Wage and Bene	40%	50%	60%	70%	80%	Bene = %	of Jnymn	Bene		

Ratio of Apprentices to Journeymen - 1:4

Craft: Air Conditioning & Refrigeration - Service and Repair **COMMENTS/NOTES**

THESE RATES MAY BE USED FOR THE FOLLOWING:
- Service/Repair/Maintenance Work to EXISTING facilities.
- Replacement or Installation of air conditioning and refrigeration equipment when the combined tonnage does not exceed 15 tons for refrigeration, or 25 tons for air conditioning.
- Replacement or Installation of "packaged" or "unitary" rooftop-type units when the combined tonnage of the units does not exceed 75 tons.

NOTE: These rates may NOT be used for any work in new construction (including work on new additions).

The regular workday shall consist of 8 hours, starting between 6:00 AM and 10:00 AM, Monday through Friday.

SHIFT DIFFERENTIALS:
- The second and third shifts shall be paid an additional 15% of the hourly rate.
- All shifts must run for a minimum of 5 consecutive days.

OVERTIME:
Hours worked in excess of 8 per day or before or after the regular workday, that are not shift work, and all hours on Saturday shall be paid at time and one-half the hourly rate, inclusive of benefits. All hours on Sunday and holidays shall be paid at double the hourly rate, inclusive of benefits.

RECOGNIZED HOLIDAYS: New Year's Day, Presidents' Day, Memorial Day, July 4th, Labor Day, Veterans' Day, Thanksgiving Day, Christmas Day.

NEW JERSEY DEPARTMENT OF LABOR AND WORKFORCE DEVELOPMENT

PREVAILING WAGE RATE DETERMINATION

County - MIDDLESEX

Craft: Boilermaker **PREVAILING WAGE RATE**

	01/01/22	01/01/23
Foreman	W53.13 B46.00 T99.13	W53.50 B46.66 T100.16
General Foreman	W55.13 B47.05 T102.18	W55.50 B47.71 T103.21
Journeyman	W48.13 B44.29 T92.42	W48.50 B44.92 T93.42

Craft: Boilermaker **APPRENTICE RATE SCHEDULE**

INTERVAL	PERIOD AND RATES									
1000 Hours	65%	70%	75%	80%	85%	90%	95%			
Benefit =	38.07	39.03	40.03	41.00	41.99	42.97	43.93			

Ratio of Apprentices to Journeymen - *

* 1 apprentice will be allowed for the first 5 journeymen, 1 apprentice for the next 10 journeymen and 1 apprentice for each succeeding 20 journeymen up to a maximum of 5 apprentices per contractor on any one job.

Craft: Boilermaker **COMMENTS/NOTES**

HIGH WORK: All apprentices working on the erection, repair, or dismantling of smoke stacks, standpipes, or water towers shall be paid the Journeyman rate.

The regular workday shall consist of 8 hours, between 8:00 AM and 4:30 PM.

SHIFT DIFFERENTIALS:
- The second shift shall work 7½ hours and receive 8 hours pay, at a rate equal to the regular hourly rate plus 10%.
- The third shift shall work 7 hours and receive 8 hours pay, at a rate equal to the regular hourly rate plus 20%.
- For "Municipal Water Works" projects only, the following shall apply: Two, four day, 10 hour shifts may be worked at straight time Monday through Thursday. The day shift shall work four days, at 10 hours, for 10 hours pay. The second shift shall work four days, at nine and a half hours, for 10 hours pay, plus 10% the hourly rate for new work and .25 cents on repair work. Friday may be used as a make-up day at straight time, due to weather conditions, hoilday or any other circumstances beyond the employer's control.

OVERTIME:
- Hours in excess of 8 per day, Monday through Friday, and all hours on Saturdays shall be paid at time and one-half the hourly rate. All hours on Sundays and holidays (except Labor Day) shall be paid at double the hourly rate. All hours on Labor Day shall be paid at four times the hourly rate.
- If any other craft employed by the same contractor, or a subcontractor thereof, receives double time in lieu of time and one-half, then the Boilermaker shall receive double time in lieu of time and one-half.
- For "Municipal Water Works" projects only, the following shall apply: Four 10 hour days may be worked Monday through Thursday at straight time. Friday may be used as a make-up day for a day lost to inclement weather, holiday or other conditions beyond the control of the employer. Overtime shall be paid for any hours that exceed 10 hours per day or 40 hours per week.

RECOGNIZED HOLIDAYS: New Year's Day, Washington's Birthday, Memorial Day, July 4th, Labor Day, Presidential Election Day, Veterans' Day, Thanksgiving Day, Christmas Day. Sunday holidays observed the following Monday.

NEW JERSEY DEPARTMENT OF LABOR AND WORKFORCE DEVELOPMENT

PREVAILING WAGE RATE DETERMINATION

County - MIDDLESEX

Craft: Boilermaker - Minor Repairs **PREVAILING WAGE RATE**

	01/01/22	01/01/23
Foreman	W35.19 B17.67 T52.86	W35.45 B17.78 T53.23
General Foreman	W35.69 B17.67 T53.36	W35.95 B17.78 T53.73
Mechanic	W33.69 B17.67 T51.36	W33.95 B17.78 T51.73

Craft: Boilermaker - Minor Repairs **COMMENTS/NOTES**

NOTE: These rates apply to MINOR REPAIR WORK ONLY (repair work in the field for which the contract amount does not exceed $125,000.00), for boilers that do not produce electric or are not used in the heating of petroleum products.

OVERTIME:
Hours in excess of 8 per day, Monday through Friday, and all hours on Saturdays shall be paid at time and one-half the hourly rate. All hours on Sundays and holidays (except Labor Day) shall be paid at double the hourly rate. All hours on Labor Day shall be paid at four times the hourly rate.

RECOGNIZED HOLIDAYS: New Year's Day, Washington's Birthday, Good Friday, Memorial Day, July 4th, Labor Day, Presidential Election Day, Thanksgiving Day, day after Thanksgiving, Christmas Day. Saturday holidays observed the preceding Friday, Sunday holidays observed the following Monday.

NEW JERSEY DEPARTMENT OF LABOR AND WORKFORCE DEVELOPMENT

PREVAILING WAGE RATE DETERMINATION

County - MIDDLESEX

Craft: Bricklayer, Stone Mason **PREVAILING WAGE RATE**

	11/01/22
Deputy Foreman	W49.90 B34.83 T84.73
Foreman	W53.40 B34.83 T88.23
Journeyman	W46.90 B34.83 T81.73

Craft: Bricklayer, Stone Mason **APPRENTICE RATE SCHEDULE**

INTERVAL	PERIOD AND RATES									
6 months	40%	50%	55%	60%	65%	70%	75%	80%		
Benefits	4.00	5.00	5.50	6.00	23.26	24.91	26.58	28.22		

Ratio of Apprentices to Journeymen - 1:5

Craft: Bricklayer, Stone Mason **COMMENTS/NOTES**

The regular workday shall consist of 8 hours, between 6:00 AM and 4:30 PM.

SHIFT DIFFERENTIALS:
- When a 2 shift schedule (including a day shift) is established, the first, or day shift, shall be established on an 8 hour basis. The second shift shall be established on an 8 hour basis, and receive the regular rate plus 10%, inclusive of benefits.
- When a three shift schedule is established, the first shift shall be established on an 8 hour basis, the second shift on a 7.5 hour basis, and the third shift on a 7 hour basis. The first shift shall receive the regular hourly rate, the second shift shall receive the regular rate plus 10%, inclusive of benefits, and the third shift shall receive the regular rate plus 15%, inclusive of benefits.
- When there is no day shift, and a second or third shift is established, it shall be established on an 8 hour basis. The second shift shall receive the regular rate plus 10%, inclusive of benefits, and the third shift shall receive the regular rate plus 15%, inclusive of benefits.
- When an irregular shift must be established, this shift shall receive the regular rate plus 10%, inclusive of benefits.

OVERTIME:
- The first 2 hours in excess of 8 per day, or before or after the regular workday that are not shift work, Monday through Friday, shall be paid at time and one-half the regular rate, inclusive of benefits. Any additional overtime shall be paid at double the regular rate, inclusive of benefits. The first 10 hours on Saturday shall be paid at time and one-half the regular rate, inclusive of benefits. Any additional overtime shall be paid at double the regular rate, inclusive of benefits. All hours on Sundays and holidays shall be paid at double the regular rate, inclusive of benefits.
- Saturday may be used as a make-up day for hours lost to inclement weather.
- When Bricklayers/Stone Masons work on Saturday with Laborers, and no other crafts are working on the project for the day, benefits may be paid at straight time. If other crafts are present, the applicable overtime rate for benefits shall be paid.

RECOGNIZED HOLIDAYS: New Year's Day, President's Day, Memorial Day, July 4th, Labor Day, Veterans' Day, Thanksgiving Day, Christmas Day. Sunday holidays will be observed the following Monday.

NEW JERSEY DEPARTMENT OF LABOR AND WORKFORCE DEVELOPMENT

PREVAILING WAGE RATE DETERMINATION

County - MIDDLESEX

Craft: Carpenter **PREVAILING WAGE RATE**

	05/16/22
Foreman	W61.30 B36.10 T97.40
Journeyman	W53.30 B31.47 T84.77

Craft: Carpenter **APPRENTICE RATE SCHEDULE**

INTERVAL	PERIOD AND RATES									
Yearly	40%	55%	65%	80%	90%					
Benefits	58% of	Appren	tice	Wage Rate	for all	intervals	+ $0.55			

Ratio of Apprentices to Journeymen - 1:3

For Solar installation- all work on solar projects that fall under the jurisdiction of the carpenters, and does not require an electrician, the ratio of Apprentices to Journeymen shall be 1:1.

Craft: Carpenter **COMMENTS/NOTES**

FOREMAN REQUIREMENTS:
- When there are 2 or more Carpenters on a job, 1 shall be designated as a Foreman.
- When there are 21 or more Carpenters on a job, 2 shall be designated as Foremen.

The regular workday shall consist of 8 hours, starting between 6:00 AM and 9:00 AM.

SHIFT DIFFERENTIALS:
- When a 2 shift schedule (including a day shift) is established, the day shift shall be established on an 8 hour basis. The second shift shall be established on an 8 hour basis, and receive the regular rate plus 10%, inclusive of benefits.
- When a three shift schedule is established, the first shift shall be established on an 8 hour basis, the second shift on a 7.5 hour basis, and the third shift on a 7 hour basis. The first shift shall receive the regular hourly rate, the second shift shall receive the regular rate plus 10% and the third shift shall receive the regular rate plus 15%, inclusive of benefits.
- When there is no day shift, and a second or third shift is established, it shall be established on an 8 hour basis. The second shift shall receive the regular rate plus 10% and the third shift shall receive the regular rate plus 15%, inclusive of benefits.
- When an irregular shift must be established, this shift shall receive the regular rate plus 15%, inclusive of benefits.

OVERTIME:
- All hours in excess of 8 per day, or before or after an established shift that are not shift work, and all hours on Saturdays shall be paid at time and one-half the hourly rate, inclusive of benefits. All hours on Sundays and holidays shall be paid at double the hourly rate, inclusive of benefits.
- Four 10-hour days may be worked, Monday to Thursday, at straight time. Friday may be used as a make-up day for a day lost due to inclement weather. If Friday is not a make-up day, all hours on Friday shall be paid at time and one-half the hourly rate, inclusive of benefits.

RECOGNIZED HOLIDAYS: New Year's Day, Presidents' Day, Memorial Day, July 4th, Labor Day, Veterans' Day, Thanksgiving Day, Christmas Day. Sunday holidays observed the following Monday. Veterans' Day may be substituted for

the day after Thanksgiving.

NEW JERSEY DEPARTMENT OF LABOR AND WORKFORCE DEVELOPMENT

PREVAILING WAGE RATE DETERMINATION

County - MIDDLESEX

Craft: Carpenter - Resilient Flooring **PREVAILING WAGE RATE**

	06/06/22
Foreman	W61.30 B36.01 T97.31
Journeyman	W53.30 B31.38 T84.68

Craft: Carpenter - Resilient Flooring **APPRENTICE RATE SCHEDULE**

INTERVAL	PERIOD AND RATES									
Yearly	40%	55%	65%	80%	90%					
Benefit	58%	of	Appren	tice	Wage Rate	for all	intervals	+ $0.46		

Ratio of Apprentices to Journeymen - *

* 1 apprentice shall be allowed to every 2 journeymen or major fraction thereof. No more than 3 apprentices on any one job or project.

Craft: Carpenter - Resilient Flooring **COMMENTS/NOTES**

FOREMAN REQUIREMENTS:
- On any job where there are 4 or more Carpenters of Resilient Flooring, 1 must be designated a Foreman.

FOR SYNTHETIC TURF INSTALLATION ONLY:
- The rate shall be 90% of the wage and benefit rate.

The regular workday consists of 8 hours, starting between 6:00 AM and 9:00 AM.

SHIFT DIFFERENTIALS:
- When a 2 shift schedule (including a day shift) is established, the day shift, shall be established on an 8 hour basis. The second shift shall be established on an 8 hour basis, and receive the regular wage rate plus 10%.
- When a three shift schedule is established, the first shift shall be established on an 8 hour basis, the second shift on a 7.5 hour basis, and the third shift on a 7 hour basis. The first shift shall receive the regular wage rate, the second shift shall receive the regular wage rate plus 10% and the third shift shall receive the regular wage rate plus 15%.
- When there is no day shift, and a second or third shift is established, it shall be established on an 8 hour basis. The second shift shall receive the regular wage rate plus 10% and the third shift shall receive the regular wage rate plus 15%.
- When an irregular shift must be established, this shift shall receive the regular rate plus 15%, inclusive of benefits.

OVERTIME:
- Hours in excess of 8 per day or 40 per week, or before or after the regular workday, Monday through Friday, shall be paid at time and one-half the wage rate. Saturday may be used as a make-up day, at straight time, up to 8 hours, for hours lost to reasons beyond the control of the employer, up to a total of 40 hours per week; hours in excess of 8 on Saturday shall then be paid at time and one-half the wage rate. If Saturday is not a make-up day, all hours on Saturday shall be paid at time and one-half the wage rate. All hours on Sundays and holidays shall be paid at double the wage rate.
- Four 10-hour days may be worked, Monday to Thursday, at straight time. Friday may be used as a make-up day for hours lost to reasons beyond the control of the employer. If Friday is not a make-up day, all hours on Friday shall be paid at time and one-half the wage rate.

RECOGNIZED HOLIDAYS: New Year's Day, Presidents' Day, Memorial Day, July 4th, Labor Day, Veterans' Day, Thanksgiving Day, Christmas Day. Sunday holidays will be observed the following Monday. Veterans' Day may be substituted for the day after Thanksgiving.

NEW JERSEY DEPARTMENT OF LABOR AND WORKFORCE DEVELOPMENT

PREVAILING WAGE RATE DETERMINATION

County - MIDDLESEX

Craft: Carpenter-Residential Construction **PREVAILING WAGE RATE**

	10/20/22
Foreman	W50.97 B11.58 T62.55
Journeyman	W44.32 B10.78 T55.10

Craft: Carpenter-Residential Construction **APPRENTICE RATE SCHEDULE**

INTERVAL	PERIOD AND RATES									
Yearly	40%	55%	65%	80%						
Benefit	12% of	Appren	tice	wage rate	for all	intervals	+ $5.46			

Ratio of Apprentices to Journeymen - 1:3

Craft: Carpenter-Residential Construction **COMMENTS/NOTES**

FOREMAN REQUIREMENTS:
- When there are 2 or more Carpenters on a job, 1 shall be designated as a Foreman.
- When there are 21 or more Carpenters on a job, 2 shall be designated as Foremen.

The regular workday shall consist of 8 hours, starting between 6:00 AM and 9:00 AM.

RESIDENTIAL CONSTRUCTION:
All residential construction (excluding commercial buildings and institutional housing), no more than four (4) floors in height above grade consisting of those projects involving the construction, alteration, or repair of town houses or row houses, single family homes, mobile homes, multi-family homes, mixed-use buildings that include commercial space on the first floor or below grade, and apartment buildings.

SHIFT DIFFERENTIALS:
- When a 2 shift schedule (including a day shift) is established, the day shift shall be established on an 8 hour basis. The second shift shall be established on an 8 hour basis, and receive the regular rate plus 10%, inclusive of benefits.
- When a three shift schedule is established, the first shift shall be established on an 8 hour basis, the second shift on a 7.5 hour basis, and the third shift on a 7 hour basis. The first shift shall receive the regular hourly rate, the second shift shall receive the regular rate plus 10% and the third shift shall receive the regular rate plus 15%, inclusive of benefits.
- When there is no day shift, and a second or third shift is established, it shall be established on an 8 hour basis. The second shift shall receive the regular rate plus 10% and the third shift shall receive the regular rate plus 15%, inclusive of benefits.
- When an irregular shift must be established, this shift shall receive the regular rate plus 15%, inclusive of benefits.

OVERTIME:
- All hours in excess of 8 per day, or before or after an established shift that are not shift work, and all hours on Saturdays shall be paid at time and one-half the hourly rate, inclusive of benefits. All hours on Sundays and holidays shall be paid at double the hourly rate, inclusive of benefits.
- Four 10-hour days may be worked, Monday to Thursday, at straight time. Friday may be used as a make-up day for a

day lost due to inclement weather. If Friday is not a make-up day, all hours on Friday shall be paid at time and one-half the hourly rate, inclusive of benefits.

RECOGNIZED HOLIDAYS: New Year's Day, Presidents' Day, Memorial Day, July 4th, Labor Day, Veterans' Day, Thanksgiving Day, Christmas Day. Sunday holidays observed the following Monday. Veterans' Day may be substituted for the day after Thanksgiving.

County - MIDDLESEX

Craft: Cement Mason **PREVAILING WAGE RATE**

See "Bricklayer, Stone Mason" Rates

Craft: Cement Mason **COMMENTS/NOTES**

See " Bricklayer, Stone Mason" Rates

NEW JERSEY DEPARTMENT OF LABOR AND WORKFORCE DEVELOPMENT

PREVAILING WAGE RATE DETERMINATION

County - MIDDLESEX

Craft: Commercial Painter **PREVAILING WAGE RATE**

	05/18/22
Foreman	W47.19 B28.21 T75.40
General Foreman	W51.48 B28.21 T79.69
Journeyman	W42.90 B28.21 T71.11

Craft: Commercial Painter **APPRENTICE RATE SCHEDULE**

INTERVAL	PERIOD AND RATES									
6 Months	40%	45%	55%	65%	70%	75%	80%	80%		
Benefits	8.40	8.40	10.40	10.40	11.40	11.40	14.15	14.15		

Ratio of Apprentices to Journeymen - 1:4

Craft: Commercial Painter **COMMENTS/NOTES**

* Commercial Painters perform work on all commercial structures such as offices, schools, hotels, shopping malls, restaurants, condominiums, etc.

Spraying, sandblasting, lead abatement work on commercial buildings, work performed above 3 stories or 30 feet in height, or using swing scaffolds requires an additional 10% of the wage rate.

FOREMEN REQUIREMENTS:
- When there are 4 or more Painters on a job, 1 shall be designated a Foreman.
- When there are 15 or more Painters on a job, 1 shall be designated a General Foreman.

The regular workday shall consist of 8 hours between 7:00 AM and 5:30 PM.

SHIFT DIFFERENTIALS:
- The second shift shall receive an additional 10% of the hourly rate, per hour, and the third shift shall receive an additional 15% of the hourly rate, per hour.

OVERTIME:
- Hours in excess of 8 per day, or before or after the regular workday, Monday through Friday, and all hours on Saturdays shall be paid at time and one-half the regular rate. All hours on Sundays and holidays shall be paid at double the regular rate.
- Saturday or Sunday may be used to make up a day lost to inclement weather, at straight time.
- Four 10-hour days may be worked, at straight time, Monday through Friday.

RECOGNIZED HOLIDAYS: New Year's Day, President's Day, Memorial Day, July 4th, Labor Day, General Election Day,

Veterans' Day, Thanksgiving Day, Christmas Day.

County - MIDDLESEX

Craft: Diver **PREVAILING WAGE RATE**

	05/01/22
Diver	W61.99 B50.47 T112.46
Tender	W50.25 B50.47 T100.72

Craft: Diver **COMMENTS/NOTES**

NOTE: All dive crews must consist of a Tender, a Diver, and a standby Diver (standby Diver is the same rate as a Diver).

DEPTH & PENETRATION RATES: Divers shall be paid the following depth and penetration rates, in addition to the regular hourly rate, when applicable:

AIR DIVES:
0-59 feet: No additional wage
60-74 feet: + $0.25 per foot
75-125 feet: + $0.78 per foot

MIXED GAS DIVES:
0-74 feet: No additional wage
75-125 feet: + $1.00 per foot
126-200 feet: + $2.00 per foot

PENETRATION DIVES:
126-200 feet: + $1.50 per foot
201-275 feet: + $1.75 per foot
276-350 feet: + $2.00 per foot
351-425 feet: + $2.50 per foot

SHIFT DIFFERENTIAL:
- When a 2 shift schedule (including a day shift) is established, the day shift shall be established on an 8 hour basis. The second shift shall be established on an 8 hour basis and receive an additional 113% of the wage rate.
- When a three shift schedule is established, all three shifts shall be established on an 8 hour basis, but the second and third shifts shall receive an additional 113% of the wage rate.
- Benefits on shift work shall be paid at the straight-time rate.

OVERTIME:
Hours in excess of 8 per day, Monday through Friday, and all hours on Saturdays shall be paid at time and one-half the hourly rate. All hours on Sundays and holidays shall be paid at double the hourly rate.

RECOGNIZED HOLIDAYS: New Year's Day, Presidents' Day, Memorial Day, July 4th, Labor Day, Veterans' Day, Presidential Election Day, Thanksgiving Day, Christmas Day. Veterans' Day may be switched with the day after Thanksgiving.

NEW JERSEY DEPARTMENT OF LABOR AND WORKFORCE DEVELOPMENT

PREVAILING WAGE RATE DETERMINATION

County - MIDDLESEX

Craft: Dockbuilder/Pile Driver **PREVAILING WAGE RATE**

	09/21/22
Foreman	W57.79 B50.47 T108.26
Foreman (Concrete Form Work)	W56.70 B37.11 T93.81
Journeyman	W50.25 B50.47 T100.72
Journeyman (Concrete Form Work)	W49.30 B37.11 T86.41

Craft: Dockbuilder/Pile Driver **APPRENTICE RATE SCHEDULE**

INTERVAL	PERIOD AND RATES									
Yearly	20.10	25.13	32.66	40.20						
Benefits	33.18	for all	intervals							

Ratio of Apprentices to Journeymen - *

* When there are 4 or fewer Dockbuilders/Pile Drivers on a job, no more than 1 may be an apprentice. When there are 5 or more Dockbuilders/Pile Drivers, there may be 1 apprentice for every 5 Dockbuilders/Pile Drivers.

Craft: Dockbuilder/Pile Driver **COMMENTS/NOTES**

APPRENTICE RATE SCHEDULE FOR CONCRETE FORM WORK ONLY:

INTERVAL	PERIOD AND RATES			
Yearly	19.72	24.65	32.05	39.44
Benefits	25.24 for all intervals			

CREOSOTE HANDLING:
When handling creosote products on land piledriving, floating marine construction, and construction of wharves, the worker shall receive an additional $0.25 per hour.

HAZARDOUS WASTE WORK:
- Hazardous waste removal work on a state or federally designated hazardous waste site where Level A, B, or C personal protection is required: an additional 20% of the hourly rate, per hour.
- Hazardous waste removal work in Level D, or where personal protection is not required: an additional $1.00 per hour.

CERTIFIED WELDER: When required on the job by the project owner, a Certified Welder shall receive an additional $1.00 per hour.

FOREMAN REQUIREMENTS:
The first Dockbuilder/Pile Driver on the job shall be designated a Foreman.

SHIFT DIFFERENTIAL:
- When a 2 shift schedule (including a day shift) is established, the day shift shall be established on an 8 hour basis. The second shift shall be established on an 8 hour basis and receive an additional 113% of the wage rate.
- When a three shift schedule is established, all three shifts shall be established on an 8 hour basis, but the second and third shifts shall receive an additional 113% of the wage rate.
- Benefits on shift work shall be paid at the straight-time rate.

OVERTIME:
Hours in excess of 8 per day, Monday through Friday, and all hours on Saturdays shall be paid at time and one-half the hourly rate. All hours on Sundays and holidays shall be paid at double the hourly rate.

RECOGNIZED HOLIDAYS: New Year's Day, Presidents' Day, Memorial Day, July 4th, Labor Day, Veterans' Day, Presidential Election Day, Thanksgiving Day, Christmas Day. Veterans' Day may be switched with the day after Thanksgiving.

NEW JERSEY DEPARTMENT OF LABOR AND WORKFORCE DEVELOPMENT

PREVAILING WAGE RATE DETERMINATION

County - MIDDLESEX

Craft: Drywall Finisher **PREVAILING WAGE RATE**

	06/16/22
Foreman	W46.36 B28.16 T74.52
General Foreman	W48.48 B28.16 T76.64
Journeyman	W42.16 B28.16 T70.32

Craft: Drywall Finisher **APPRENTICE RATE SCHEDULE**

INTERVAL	PERIOD AND RATES									
6 Months	40%	50%		60%	70%		80%	90%		
Benefits	Intervals	1 to 2 =	11.00	Intervals	3 to 4 =	13.77	Intervals	5 to 6 =	17.38	

Ratio of Apprentices to Journeymen - 1:4

Craft: Drywall Finisher **COMMENTS/NOTES**

The regular workday shall consist of 8 hours between 7:00 AM and 5:30 PM.

SHIFT DIFFERENTIALS:
- The second shift shall receive an additional 10% of the hourly rate, per hour, and the third shift shall receive an additional 15% of the hourly rate, per hour.
- When 3 shifts are worked, the second shift shall receive 8 hours pay for 7.5 hours of work, and the third shift shall receive 8 hours pay for 7 hours of work.
- Shift work must run for a minimum of 5 consecutive workdays.

OVERTIME:
- Hours in excess of 8 per day, Monday through Friday, and all hours on Saturdays shall be paid at time and one-half the regular rate, inclusive of benefits. All hours on Sundays and holidays shall be paid at double the regular rate, inclusive of benefits.
- Saturday or Sunday may be used to make up a day lost to inclement weather, at straight time.

RECOGNIZED HOLIDAYS: New Year's Day, Memorial Day, July 4th, Labor Day, Presidential Election Day, Veterans' Day, Thanksgiving Day, Christmas Day. Saturday holiday observed the preceding Friday. Sunday holiday observed the following Monday.

NEW JERSEY DEPARTMENT OF LABOR AND WORKFORCE DEVELOPMENT

PREVAILING WAGE RATE DETERMINATION

County - MIDDLESEX

Craft: Electrician **PREVAILING WAGE RATE**

	08/09/22	05/29/23	06/03/24
Assistant General Foreman	W69.81 B49.76 T119.57	W71.72 B51.10 T122.82	W73.58 B52.42 T126.00
Foreman, Cable Splicer, Certified Crane Operator, Utility Tag Holder	W65.35 B46.55 T111.90	W67.13 B47.82 T114.95	W68.87 B49.08 T117.95
General Foreman (100 + Journeyman workers on job)	W78.19 B55.71 T133.90	W80.32 B57.22 T137.54	W82.41 B58.71 T141.12
General Foreman (21 to 100 Journeyman workers on job)	W72.61 B51.72 T124.33	W74.58 B53.14 T127.72	W76.52 B54.52 T131.04
Journeyman	W55.85 B39.80 T95.65	W57.37 B40.88 T98.25	W58.86 B41.94 T100.80

Craft: Electrician **APPRENTICE RATE SCHEDULE**

INTERVAL	**PERIOD AND RATES**									
Yearly	30%	40%	50%	60%	80%					
Benefits	70.25% of	Appren	tice	Wage	Rate	for all	intervals			

Ratio of Apprentices to Journeymen - 2:3

For Solar installation- the handling (uncrating, moving, and placing on the roof), installation of solar panels and ballasting solar panels- the ratio of Apprentices to Journeyman- 3:1

Craft: Electrician **COMMENTS/NOTES**

THESE RATES ALSO APPLY TO:
- All burglar and fire alarm work.
- All fiber optic work.
- Teledata work in new construction (including additions).

HEIGHT WORK (40 feet above ground/floor): +10%

FOREMAN REQUIREMENTS:
- On any job where there is only 1 Journeyman electrician, who lays out his/her own job, that electrician shall receive the Foreman rate.
- On any job where there are 2 or more electricians, 1 shall be a Foreman.
- When more than 10 Journeymen are employed and a second Foreman is required, the first Foreman shall receive the Assistant General Foreman rate.
- 1 additional Foreman shall be designated for every 10 additional electricians.
- On any job where there are 21 or more electricians, 1 shall be a General Foreman.

The regular workday shall consist of 8 hours, between 7:00 AM and 4:30 PM.

SHIFT DIFFERENTIALS:
- 1st Shift (8:00 AM to 4:30 PM)
- 2nd Shift (4:30 PM to 12:30 AM): 8 hrs. pay for 7.5 hrs. work + an additional 10% of the regular hourly rate per hour, inclusive of benefits.
- 3rd Shift (12:30 AM to 8:00 AM): 8 hrs. pay for 7 hrs. work + an additional 15% of the regular hourly rate per hour, inclusive of benefits.
- Shift work must run for a minimum of 5 consecutive workdays.

OVERTIME:
Hours in excess of 8 per day, or before or after the regular workday Monday through Friday, that are not shift work, and all hours on Saturdays shall be paid at time and one-half the regular rate, inclusive of benefits. All hours on Sundays and holidays shall be paid at double the hourly rate, inclusive of benefits.

Four 10-hour days may be worked Monday to Thursday at straight-time.

For "Solar work" projects only, Saturday may be used as a make-up day due to inclement weather, to be paid at straight-time for the first eight (8) hours iof work.

For "Fire Alarm Detection System" installation work in an existing building, and for work that must be performed during normal school hours, the start-time may begin anytime the students have left the building, the rate of pay shall be paid at straight-time , Monday through Friday, for the first eight (8) hours of work.

RECOGNIZED HOLIDAYS: New Year's Day, Presidents' Day, Memorial Day, July 4th, Labor Day, Presidential Election Day, Veterans' Day, Thanksgiving Day, Christmas Day. Saturday holidays observed the preceding Friday, Sunday holidays observed the following Monday.

NEW JERSEY DEPARTMENT OF LABOR AND WORKFORCE DEVELOPMENT

PREVAILING WAGE RATE DETERMINATION

County - MIDDLESEX

Craft: Electrician - Teledata (15 Instruments and Less) **PREVAILING WAGE RATE**

	11/28/22	12/04/23	12/02/24
Journeyman Technician (1-2 workers on job)	W0.00 B0.00 T72.91	W0.00 B0.00 T74.86	W0.00 B0.00 T76.66
Master Tech./Gen. Foreman I (31+ workers on job)	W0.00 B0.00 T94.12	W0.00 B0.00 T96.07	W0.00 B0.00 T97.87
Senior Tech./Gen. Foreman II (21-30 workers on job)	W0.00 B0.00 T86.35	W0.00 B0.00 T88.30	W0.00 B0.00 T90.10
Technician A/Asst. Gen. Foreman (11-20 workers on job)	W0.00 B0.00 T82.81	W0.00 B0.00 T84.76	W0.00 B0.00 T86.56
Technician B/Foreman (4-10 workers on job)	W0.00 B0.00 T79.27	W0.00 B0.00 T81.22	W0.00 B0.00 T83.02
Technician C/Foreman (3 workers on job)	W0.00 B0.00 T75.73	W0.00 B0.00 T77.68	W0.00 B0.00 T79.48

Craft: Electrician - Teledata (15 Instruments and Less) **APPRENTICE RATE SCHEDULE**

INTERVAL	**PERIOD AND RATES**									
6 Months	35%	35%	40%	43%	48%	54%	61%	67%	74%	81%
Benefits	62.5% of	Appren	tice	Wage	Rate	for all	intervals			

Ratio of Apprentices to Journeymen - 2:3

Craft: Electrician - Teledata (15 Instruments and Less) **COMMENTS/NOTES**

NOTES:
1) These rates are for service, maintenance, moves and/or changes affecting 15 instruments or less. These rates are not to be used for any new construction or any fiber optic work.
2) The number of workers on the jobsite is the determining factor for which Foreman category applies.

HEIGHT WORK: Any work performed 40 feet above ground or floor: +10%

The regular workday shall consist of 8 hours, between 7:00 AM and 4:30 PM.

SHIFT DIFFERENTIALS:
- 2nd Shift (4:30 PM to 12:30 AM): 8 hrs. pay for 7.5 hrs. work + an additional 10% of the regular hourly rate per hour, inclusive of benefits.

- 3rd Shift (12:30 AM to 8:00 AM): 8 hrs. pay for 7 hrs. work + an additional 15% of the regular hourly rate per hour, inclusive of benefits.
- Shift work must run for a minimum of 5 consecutive workdays.

OVERTIME:
Hours in excess of 8 per day, or before or after the regular workday Monday through Friday, that are not shift work, and for the first 10 hours on Saturday shall be paid at time and one-half the regular rate, inclusive of benefits. All hours on Sunday and holidays and after 10 hours on Saturday shall be paid at double the hourly rate, inclusive of benefits.

RECOGNIZED HOLIDAYS: New Year's Day, Presidents' Day, Memorial Day, July 4th, Labor Day, Presidential Election Day, Veterans Day, Thanksgiving Day, Christmas Day. Saturday holidays observed the preceding Friday, Sunday holidays observed the following Monday.

County - MIDDLESEX

Craft: Electrician - Teledata (16 Instruments & More) **PREVAILING WAGE RATE**

See "Electrician" Rates

Craft: Electrician - Teledata (16 Instruments & More) **COMMENTS/NOTES**

*****See ELECTRICIAN Rates*****

NEW JERSEY DEPARTMENT OF LABOR AND WORKFORCE DEVELOPMENT

PREVAILING WAGE RATE DETERMINATION

County - MIDDLESEX

Craft: Electrician- Outside Commercial **PREVAILING WAGE RATE**

	05/30/22	05/29/23	06/03/24
Assistant General Foreman	W70.44 B49.13 T119.57	W72.35 B50.46 T122.81	W74.23 B51.77 T126.00
Foreman, Certified Crane Operator, Cable Splicer, Utility Tag Holder	W65.93 B45.99 T111.92	W67.72 B47.23 T114.95	W69.48 B48.46 T117.94
General Foreman (101 + Journeyman Lineman workers on job site)	W78.89 B55.02 T133.91	W81.03 B56.52 T137.55	W83.13 B57.98 T141.11
General Foreman (21-100 Journeyman Lineman workers on job site)	W73.26 B51.10 T124.36	W75.24 B52.48 T127.72	W77.19 B53.84 T131.03
Groundman	W55.56 B38.75 T94.31	W57.09 B39.82 T96.91	W58.59 B40.87 T99.46
Groundman (when installing conduit on public roadways)	W33.81 B23.58 T57.39	W34.73 B24.22 T58.95	W35.63 B24.85 T60.48
Journeyman Lineman	W56.35 B39.30 T95.65	W57.88 B40.37 T98.25	W59.38 B41.42 T100.80
Winch Operator	W55.56 B38.75 T94.31	W57.09 B39.82 T96.91	W58.59 B40.87 T99.46

Craft: Electrician- Outside Commercial **APPRENTICE RATE SCHEDULE**

INTERVAL	**PERIOD AND RATES**									
6 Months	60%	65%	70%	75%	80%	85%	90%			
Benefits	69.75% of	Appren	tice	Wage	Rate	for all	intervals			

Craft: Electrician- Outside Commercial **COMMENTS/NOTES**

* FOR UTILITY WORK PLEASE SEE STATEWIDE RATES
The regular workday shall consist of 8 hours, between 7:00 AM and 4:30 PM.

HEIGHT WORK (40 feet above ground/floor): + 10%

FOREMAN REQUIREMENTS (number of Electricians on site):
On any job where there is only 1 journeyman electrician, who lays out his/her own job, that electrician shall receive the Foreman rate.
On any job where there are 2 or more electricians, 1 shalll be a Foreman.
When more than 10 journeymen are employed and a second Foreman is required, the first Foreman shall receive the Assistant General Foreman rate.
1 additional Foreman shall be designated for every 10 additional electricians.
On any job where there are 21 or more electricians, 1 shall be a General Foreman.

SHIFT DIFFERENTIALS:
Shift work must run for a minimum of 5 consecutive workdays.
1st Shift (8:00 AM to 4:30 PM).
2nd Shift (4:30 PM to 12:30 AM): 8 hrs. pay for 7.5 hrs. work + an additional 10% of the regular rate per hour, inclusive of benefits.
3rd Shift (12:30 AM to 8:00 AM): 8 hrs. pay for 7 hrs. work + an additional 15% of the regular rate per hour, inclusive of benefits.

OVERTIME:
Hours in excess of 8 per day, or before or after the regular workday Monday through Friday, that are not shift work, and all hours on Saturday shall be paid at time and one-half the regular rate, inclusive of benefits. All hours on
Sundays and Holidays shall be paid at double the hourly rate, inclusive of benefits.

Four 10-hour days may be worked Monday to Thursday at straight-time.

RECOGNIZED HOLIDAYS:
New Year's Day, Presidents' Day, Memorial Day, July 4th, Labor Day, Presidential Election Day, Veterans' Day, Thanksgiving Day and Christmas Day. Saturday holidays will be observed the preceding Friday. Sunday holidays will be observed the following Monday.

County - MIDDLESEX

Craft: Electrician-Utility Work (North) **PREVAILING WAGE RATE**

Rates are located in the "Statewide" rate package

Craft: Electrician-Utility Work (North) **APPRENTICE RATE SCHEDULE**

INTERVAL	PERIOD AND RATES									
* 6 Months	60%	65%	70%	75%	80%	85%	90%			
Benefits	69% of	Appren	tice	Wage	Rate	for all	intervals			

Craft: Electrician-Utility Work (North) **COMMENTS/NOTES**

Electrician-Utility Work (North) rates are located in the "Statewide" rate package.

* The apprentice wage rate is paid at the percentage of the Journeyman Lineman wage rate located in the "Statewide" rate package.

County - MIDDLESEX

Craft: Electrician-Utility Work (South) **PREVAILING WAGE RATE**

Rates are located in the "Statewide" rate package

Craft: Electrician-Utility Work (South) **APPRENTICE RATE SCHEDULE**

INTERVAL	PERIOD AND RATES									
6 Months	31.65	34.29	36.93	39.56	42.20	44.84	47.78			
Benefits	28.02	29.62	31.20	32.80	34.40	36.00	37.58			

Craft: Electrician-Utility Work (South) **COMMENTS/NOTES**

Electrician-Utility Work (South) rates are located in the "Statewide" rate package.

NEW JERSEY DEPARTMENT OF LABOR AND WORKFORCE DEVELOPMENT

PREVAILING WAGE RATE DETERMINATION

County - MIDDLESEX

Craft: Elevator Constructor **PREVAILING WAGE RATE**

	03/17/22	03/17/23
Journeyman	W75.14 B43.91 T119.05	W77.49 B45.57 T123.06

Craft: Elevator Constructor **APPRENTICE RATE SCHEDULE**

INTERVAL	PERIOD AND RATES									
Yearly	29.85	36.82	43.52	50.21						
Benefits	32.71	33.51	34.80	36.09						

Ratio of Apprentices to Journeymen - 1:1

Craft: Elevator Constructor **COMMENTS/NOTES**

APPRENTICE RATE SCHEDULE AS OF 3-17-20:

INTERVAL	PERIOD AND RATES			
Yearly	31.03	38.26	45.21	52.17
Benefits	33.38	34.20	35.55	36.89

APPRENTICE RATE SCHEDULE AS OF 3-17-21:

INTERVAL	PERIOD AND RATES			
Yearly	32.27	39.76	46.99	54.22
Benefits	34.05	34.91	36.30	37.70

APPRENTICE RATE SCHEDULE AS OF 3-17-22:

INTERVAL	PERIOD AND RATES			
Yearly	33.56	41.33	48.84	56.36
Benefits	34.72	35.61	37.05	38.50

APPRENTICE RATE SCHEDULE AS OF 3-17-23:

INTERVAL	PERIOD AND RATES			
Yearly	34.60	42.62	50.37	58.12
Benefits	36.02	36.94	38.50	

The regular workday shall consist of either 7 or 8 hours to be established at the beginning of the project, between 7:00 AM and 4:30 PM.

OVERTIME:

For all hours worked before or after the regular workday, Monday through Friday, and all hours on Saturday and Sunday, shall be paid at double the hourly rate. Holiday pay is one days wages (8 hours) plus double the hourly rate for all hours worked.

RECOGNIZED HOLIDAYS: New Year's Day, Presidents' Day, Good Friday, Memorial Day, July 4th, Labor Day, Columbus

Day, Veterans' Day, Thanksgiving Day and the day after, Christmas Day. Saturday holidays shall be observed on the previous Friday and Sunday holidays shall be observed on the following Monday.

NEW JERSEY DEPARTMENT OF LABOR AND WORKFORCE DEVELOPMENT

PREVAILING WAGE RATE DETERMINATION

County - MIDDLESEX

Craft: Elevator Modernization & Service **PREVAILING WAGE RATE**

	03/17/22	03/17/23
Journeyman	W59.09 B42.79 T101.88	W60.89 B44.41 T105.30

Craft: Elevator Modernization & Service **APPRENTICE RATE SCHEDULE**

INTERVAL	PERIOD AND RATES									
Yearly	29.85	28.84	34.09	39.33						
Benefits	32.66	33.13	34.36	35.58						

Ratio of Apprentices to Journeymen - 1:1

Craft: Elevator Modernization & Service **COMMENTS/NOTES**

APPRENTICE RATE SCHEDULE AS OF 3-17-20:

INTERVAL	PERIOD AND RATES			
Yearly	31.03	30.01	35.46	40.92
Benefits	33.33	33.82	35.09	36.36

APPRENTICE RATE SCHEDULE AS OF 3-17-21:

INTERVAL	PERIOD AND RATES			
Yearly	32.27	31.22	36.90	42.58
Benefits	34.00	34.50	35.83	37.15

APPRENTICE RATE SCHEDULE AS OF 3-17-22:

INTERVAL	PERIOD AND RATES			
Yearly	33.56	32.50	38.41	44.32
Benefits	34.67	34.20	35.20	37.94

APPRENTICE RATE SCHEDULE AS OF 3-17-23:

INTERVAL	PERIOD AND RATES			
Yearly	34.60	33.49	39.58	45.67
Benefits	35.97	36.53	37.95	39.38

MODERNIZATION (addition, replacement, refurbishing, relocation, or changes in design or appearance, of elevator equipment in existing buildings):

- The regular workday consists of 8 hours, between 7:00 AM and 4:30 PM.

- Overtime:
Hours in excess of 8 per day, or before or after the regular workday, Monday through Friday, and all hours on Saturday and Sunday shall be paid at time and one-half the hourly rate. Holiday pay is one days wages (8 hours) plus time and one-half the hourly rate for all hours worked.

SERVICE (repair or replacement of parts for the purpose of maintaining elevator equipment in good operating condition):

- The regular workday consists of 8 hours, between 6:00 AM and 6:00 PM.

- Overtime:
Hours in excess of 8 per day, or before or after the regular workday, Monday through Friday, and all hours on Saturday shall be paid at time and one-half the hourly rate. All hours on Sunday and holidays shall be paid at double the hourly rate.

RECOGNIZED HOLIDAYS (Modernization and Service): New Year's Day, Presidents' Day, Good Friday, Memorial Day, July 4th, Labor Day, Columbus Day, Veterans' Day, Thanksgiving Day and the day after, Christmas Day. Saturday holidays shall be observed on the previous Friday and Sunday holidays shall be observed on the following Monday.

NEW JERSEY DEPARTMENT OF LABOR AND WORKFORCE DEVELOPMENT

PREVAILING WAGE RATE DETERMINATION

County - MIDDLESEX

Craft: Glazier **PREVAILING WAGE RATE**

	05/18/22
* Leadman	W51.48 B29.13 T80.61
Foreman	W53.48 B29.37 T82.85
General Foreman	W55.48 B29.61 T85.09
Journeyman	W49.48 B28.89 T78.37

Craft: Glazier **APPRENTICE RATE SCHEDULE**

INTERVAL	**PERIOD AND RATES**									
6 Months	50%	55%	60%	65%	70%	75%	80%	90%		
Benefits	9.75	9.75	12.36	12.36	15.60	15.60	17.02	17.02		

Ratio of Apprentices to Journeymen - 1:4

Craft: Glazier **COMMENTS/NOTES**

Hazard/Height Pay: +$1.00 per hour

* When there are three (3) men working on a jobsite for three (3) days or longer, 1 Journeyman may be designated as a Leadman for the duration of the job, provided he has his OSHA certification.

FOREMAN REQUIREMENTS:
- When there are 4 or more Glaziers on a job, 1 must be designated a Foreman.
- When there are 15 or more Glaziers on a job, 1 must be designated a General Foreman.

The regular workday shall consist of 8 hours, between 7:00 AM and 5:30 PM, Monday to Friday.

SHIFT DIFFERENTIALS:
- The second shift shall receive an additional 10% of the hourly rate, per hour, and the third shift shall receive an additional 15% of the hourly rate, per hour.
- When 3 shifts are worked, the second shift shall receive 8 hours pay for 7.5 hours of work, and the third shift shall receive 8 hours pay for 7 hours of work.

OVERTIME:
Hours in excess of 8 per day, or before or after the regular workday Monday through Friday, and all hours on Saturdays shall be paid at time and one-half the regular rate. All hours on Sundays and holidays shall be paid at double the regular

rate.

RECOGNIZED HOLIDAYS: New Year's Day, Memorial Day, July 4th, Labor Day, General Election Day, Veterans' Day, Thanksgiving Day, Christmas Day. Saturday holiday observed the preceding Friday. Sunday holiday observed the following Monday.

NEW JERSEY DEPARTMENT OF LABOR AND WORKFORCE DEVELOPMENT

PREVAILING WAGE RATE DETERMINATION

County - MIDDLESEX

Craft: Heat & Frost Insulator **PREVAILING WAGE RATE**

	09/20/22
Foreman	W60.72 B36.22 T96.94
General Foreman	W63.06 B37.33 T100.39
Journeyman	W58.44 B35.66 T94.10

Craft: Heat & Frost Insulator **APPRENTICE RATE SCHEDULE**

INTERVAL	PERIOD AND RATES									
Yearly	27.38	32.49	39.13	45.71						
Benefits	20.86	24.73	27.41	30.01						

Ratio of Apprentices to Journeymen - 1:3

Craft: Heat & Frost Insulator **COMMENTS/NOTES**

NOTE: These rates apply to the installing of insulation on hot and cold mechanical systems.

The regular workday shall be 8 hours between 7:00 AM and 3:30 PM. In addition, the regular workday may also be 8 hours between 6:00 AM and 2:30 PM.

SHIFT DIFFERENTIAL:
- Shift work must run for a minimum of 5 consecutive workdays.
- Second Shift shall work 7.5 hours and receive 8 hours pay, at the regular rate, plus 25% per hour.
- Third Shift shall work 7 hours and receive 8 hours pay, at the regular rate, plus 30% per hour.

OVERTIME:
The first 2 hours in excess of 8 per day, hours outside of the regular workday Monday through Friday that are not shift work, and the first 10 hours on Saturday, shall be paid at time and one-half the regular rate, inclusive of benefits. All hours in excess of 10 per day, and all hours on Sunday and holidays (except Labor Day) shall be paid at double the regular rate, inclusive of benefits. All hours on Labor Day shall be paid at triple the regular rate, inclusive of benefits.

RECOGNIZED HOLIDAYS: New Year's Day, President's Day, Memorial Day, July 4th, Labor Day, Veterans' Day, Presidential Election Day, Thanksgiving Day and Christmas Day. Sunday holidays observed the following Monday.

NEW JERSEY DEPARTMENT OF LABOR AND WORKFORCE DEVELOPMENT

PREVAILING WAGE RATE DETERMINATION

County - MIDDLESEX

Craft: Heat & Frost Insulator - Asbestos Worker **PREVAILING WAGE RATE**

	09/20/22
Asbestos Helper Abatement	W36.89 B24.92 T61.81

Craft: Heat & Frost Insulator - Asbestos Worker **APPRENTICE RATE SCHEDULE**

INTERVAL	PERIOD AND RATES									
	SEE	HEAT &	FROST	INSULAT OR						

Ratio of Apprentices to Journeymen - 1:3

Craft: Heat & Frost Insulator - Asbestos Worker **COMMENTS/NOTES**

NOTE: These rates apply only to the removal of insulation materials/asbestos from mechanical systems, including containment erection and demolition, and placing material in appropriate containers.

The regular workday shall be 8 hours between 7:00 AM and 3:30 PM. In addition, the regular workday may also be 8 hours between 6:00 AM and 2:30 PM.

SHIFT DIFFERENTIALS:
- Shift work must run for a minimum of 5 consecutive workdays.
- The second shift shall work 7.5 hours and receive 8 hours pay at the regular rate, plus 25% per hour.
- The third shift shall work 7 hours and receive 8 hours pay at the regular rate, plus 30% per hour.

OVERTIME: The first 2 hours in excess of 8 per day, hours outside of the regular workday Monday through Friday that are not shift work, and the first 10 hours on Saturday, shall be paid at time and one-half the regular rate, inclusive of benefits. All hours in excess of 10 per day, and all hours on Sunday and holidays (except Labor Day) shall be paid at double the regular rate, inclusive of benefits. All hours on Labor Day shall be paid at triple the regular rate, inclusive of benefits.

RECOGNIZED HOLIDAYS: New Year's Day, Presidents' Day, Memorial Day, July 4th, Labor Day, Veterans' Day, Presidential Election Day, Thanksgiving Day and Christmas Day. Sunday holidays observed the following Monday.

NEW JERSEY DEPARTMENT OF LABOR AND WORKFORCE DEVELOPMENT

PREVAILING WAGE RATE DETERMINATION

County - MIDDLESEX

Craft: Industrial Painter- Bridges **PREVAILING WAGE RATE**

	06/08/22	02/01/23	02/01/24	02/01/25	02/01/26
Foreman	W62.23 B33.77 T96.00	W0.00 B0.00 T98.20	W0.00 B0.00 T100.20	W0.00 B0.00 T102.20	W0.00 B0.00 T104.20
General Foreman	W64.73 B33.77 T98.50	W0.00 B0.00 T100.70	W0.00 B0.00 T102.70	W0.00 B0.00 T104.70	W0.00 B0.00 T106.70
Journeyman	W57.23 B33.77 T91.00	W0.00 B0.00 T93.20	W0.00 B0.00 T95.20	W0.00 B0.00 T97.20	W0.00 B0.00 T99.20

Craft: Industrial Painter- Bridges **APPRENTICE RATE SCHEDULE**

INTERVAL	**PERIOD AND RATES**									
6 Months	50%	70%	90%							
Benefits	13.05	19.66	26.28							

Ratio of Apprentices to Journeymen - 1:3

Craft: Industrial Painter- Bridges **COMMENTS/NOTES**

* Industrial Painters perform work on all industrial structures, such as bridges, water tanks, waste water facilitites , refineries, any structural steel work, etc.

These rates apply to: All bridges that span waterways, roadways, railways and canyons. All tunnels, overpasses, viaducts and all appurtenances.

FOREMEN REQUIREMENTS:
- When there are 4 or more Painters on a job, 1 shall be designated a Foreman.
- When there are 15 or more Painters on a job, 1 shall be designated a General Foreman.

The regular workday shall consist of 8 hours between 7:00 AM and 5:30 PM.

SHIFT DIFFERENTIALS:
- The second shift shall receive an additional 10% of the hourly rate, per hour, and the third shift shall receive an additional 15% of the hourly rate, per hour.

OVERTIME:
- Hours in excess of 8 per day, Monday through Friday, and all hours on Saturdays and Sundays shall be paid at time and one-half the regular rate. All hours on holidays shall be paid at double the regular rate, except Veterans Day, which shall be paid at time and one-half the regular rate.
- During a regular work week schedule, Saturday may be used as a make-up day lost to inclement weather, paid at the regular rate.
- Four 10-hour days may be worked, at the regular rate, Monday through Thursday. When the four 10-hour day schedule is used, the 11th and 12th hours shall be paid at time and one-half the regular rate. After the 12th hour, a worker shall be

paid at double the regular rate. Friday may be used as a make-up day lost to inclement weather, paid at the regular rate.

RECOGNIZED HOLIDAYS: New Year's Day, President's Day, Memorial Day, July 4th, Labor Day, Presidential Election Day, Veterans Day, Thanksgiving Day, Christmas Day. Saturday holiday observed the preceding Friday. Sunday holiday observed the following Monday.

NEW JERSEY DEPARTMENT OF LABOR AND WORKFORCE DEVELOPMENT

PREVAILING WAGE RATE DETERMINATION

County - MIDDLESEX

Craft: Industrial Painter- Structural Steel **PREVAILING WAGE RATE**

	06/08/22	02/01/23	02/01/24	02/01/25	02/01/26
Foreman	W50.97 B31.42 T82.39	W0.00 B0.00 T84.59	W0.00 B0.00 T86.59	W0.00 B0.00 T88.59	W0.00 B0.00 T90.59
General Foreman	W53.47 B31.42 T84.89	W0.00 B0.00 T87.09	W0.00 B0.00 T89.09	W0.00 B0.00 T91.09	W0.00 B0.00 T93.09
Journeyman	W45.97 B31.42 T77.39	W0.00 B0.00 T79.59	W0.00 B0.00 T81.59	W0.00 B0.00 T83.59	W0.00 B0.00 T85.59

Craft: Industrial Painter- Structural Steel **APPRENTICE RATE SCHEDULE**

INTERVAL	**PERIOD AND RATES**									
	SEE	INDUST	RIAL	PAINTER	BRIDGES					

Ratio of Apprentices to Journeymen - 1:3

Craft: Industrial Painter- Structural Steel **COMMENTS/NOTES**

* Industrial Painters perform work on all industrial structures, such as bridges, water tanks, waste water facilitites, refineries, any structural steel work, etc.

These rates apply to: All work in power plants (any aspect). On steeples, on dams, on hangers, transformers, substations, on all open steel, in refineries, tank farms, water/sewerage treatment facilities and on pipelines.

FOREMEN REQUIREMENTS:
- When there are 4 or more Painters on a job, 1 shall be designated a Foreman.
- When there are 15 or more Painters on a job, 1 shall be designated a General Foreman.

The regular workday shall consist of 8 hours between 7:00 AM and 5:30 PM.

SHIFT DIFFERENTIALS:
- The second shift shall receive an additional 10% of the hourly rate, per hour, and the third shift shall receive an additional 15% of the hourly rate, per hour.

OVERTIME:
- Hours in excess of 8 per day, Monday through Friday, and all hours on Saturdays and Sundays shall be paid at time and one-half the regular rate. All hours on holidays shall be paid at double the regular rate, except for Veterans Day, which shall be paid at time and one-half the regular rate.
- During the regular work week schedule, Saturday may be used to make-up a day lost to inclement weather, paid at the regular rate.
- Four 10-hour days may be worked, at the regular rate, Monday through Thursday. When the four 10-hour day schedule is used, the 11th and 12th hours shall be paid at time and one-half the regular rate. After the 12th hour, a worker shall be paid at double the regular rate. Friday may be used as a make-up day lost to inclement weather, paid at the regular rate.

RECOGNIZED HOLIDAYS: New Year's Day, President's Day, Memorial Day, July 4th, Labor Day, Presidential Election Day, Veterans Day, Thanksgiving Day, Christmas Day. Saturday holiday observed the preceding Friday. Sunday holiday observed the following Monday.

NEW JERSEY DEPARTMENT OF LABOR AND WORKFORCE DEVELOPMENT

PREVAILING WAGE RATE DETERMINATION

County - MIDDLESEX

Craft: Industrial Painter- Water Tanks **PREVAILING WAGE RATE**

	06/08/22	02/01/23	02/01/24	02/01/25	02/01/26
Foreman	W52.02 B31.07 T83.09	W0.00 B0.00 T85.29	W0.00 B0.00 T87.29	W0.00 B0.00 T89.29	W0.00 B0.00 T91.29
General Foreman	W54.52 B31.07 T85.59	W0.00 B0.00 T87.79	W0.00 B0.00 T89.79	W0.00 B0.00 T91.79	W0.00 B0.00 T93.79
Journeyman	W47.02 B31.07 T78.09	W0.00 B0.00 T80.29	W0.00 B0.00 T82.29	W0.00 B0.00 T84.29	W0.00 B0.00 T86.29

Craft: Industrial Painter- Water Tanks **APPRENTICE RATE SCHEDULE**

INTERVAL	**PERIOD AND RATES**									
6 Months	50%	70%	90%							
Benefits	13.05	19.66	26.28							

Ratio of Apprentices to Journeymen - 1:3

Craft: Industrial Painter- Water Tanks **COMMENTS/NOTES**

* Industrial Painters perform work on all industrial structures, such as bridges, water tanks, waste water facilitites , refineries, any structural steel work, etc.

These rates apply to: All new and repaint water tanks (interior and exterior).

FOREMEN REQUIREMENTS:
- When there are 4 or more Painters on a job, 1 shall be designated a Foreman.
- When there are 15 or more Painters on a job, 1 shall be designated a General Foreman.

The regular workday shall consist of 8 hours between 7:00 AM and 5:30 PM.

SHIFT DIFFERENTIALS:
- The second shift shall receive an additional 10% of the hourly rate, per hour, and the third shift shall receive an additional 15% of the hourly rate, per hour.

OVERTIME:
- Hours in excess of 8 per day, Monday through Friday, and all hours on Saturdays and Sundays shall be paid at time and one-half the regular rate. All hours on holidays shall be paid at double the regular rate, except Veterans Day, which shall be paid at time and one-half the regular rate.
- During a regular work week schedule, Saturday may be used to make-up a day lost to inclement weather, paid at the regular rate.
- Four 10-hour days may be worked, at the regular rate, Monday through Thursday. When the four 10-hour day schedule is used, the 11th and 12th hours shall be paid at time and one-half the regular rate. After the 12th hour, a worker shall be paid at double the regular rate. Friday may be used as a make-up day lost to inclement weather, paid at the regular rate.

County - MIDDLESEX

RECOGNIZED HOLIDAYS: New Year's Day, President's Day, Memorial Day, July 4th, Labor Day, Presidential Election Day, Veterans Day, Thanksgiving Day, Christmas Day. Saturday holiday observed the preceding Friday. Sunday holiday observed the following Monday.

NEW JERSEY DEPARTMENT OF LABOR AND WORKFORCE DEVELOPMENT

PREVAILING WAGE RATE DETERMINATION

County - MIDDLESEX

Craft: Ironworker **PREVAILING WAGE RATE**

	07/01/22
Rod /Fence Foreman	W48.39 B48.92 T97.31
Rod/Fence Journeyman	W45.39 B48.92 T94.31
Structural Foreman	W50.69 B48.92 T99.61
Structural Journeyman	W47.69 B48.92 T96.61

Craft: Ironworker **APPRENTICE RATE SCHEDULE**

INTERVAL	**PERIOD AND RATES**									
6 Months	50%	60%		Yearly	70%	80%	90%			

Ratio of Apprentices to Journeymen - 1:4

Craft: Ironworker **COMMENTS/NOTES**

HAZARDOUS WASTE WORK: On hazardous waste removal work on a state or federally designated hazardous waste site where the Ironworker is required to wear Level A,B, or C personal protection: + $3.00 per hour

The regular workday consists of 8 hours between 6:00 AM and 4:30 PM.

FOREMAN REQUIREMENTS:
When there are 2 or more Ironworkers on a job, 1 shall be designated a Foreman.

SHIFT DIFFERENTIALS:
- When a 2 shift schedule is established, the first, or day shift , shall be established on an 8 hour basis .The second shift shall be established on an 8 hour basis, and receive the regular rate plus 15%.
- When a three shift schedule is established, the first shift shall be established on an 8 hour basis, the second shift on a 7.5 hour basis, and the third shift on a 7 hour basis. The first shift shall receive the regular hourly rate, the second shift shall receive the regular rate plus 15%, and the third shift shall receive the regular rate plus 20%.
- When there is no day shift, and a second or third shift is established, it shall be established on an 8 hour basis.
- When an irregular shift is established for the Ironworker (Structural) classification, the rate shall be paid at time and one-half the regular rate, inclusive of benefits. When an irregular shift is established for the Rod /Fence classification, the shift shall be established on an 8 hour basis and receive the regular rate, plus 20%.

OVERTIME:

- All hours in excess of 8 per day, or before or after an established shift that are not shift work, and all hours on Saturday, shall be paid at time and one-half the regular rate, inclusive of benefits. All hours on Sunday and holidays shall be paid at double the hourly rate, inclusive of benefits. Saturday may be used as a make-up day for a day lost to inclement weather. If Saturday is not a make-up day, all hours on Saturday shall be paid at time and one-half the hourly rate, inclusive of benefits.
- Four 10-hour days may be worked, Monday to Thursday, at straight time. Friday may be used as a make-up day for a day lost to inclement weather. If Friday is not a make-up day, all hours on Friday shall be paid at time and one-half the hourly rate, inclusive of benefits.

RECOGNIZED HOLIDAYS: New Year's Day, Presidents' Day, Memorial Day, July 4th, Labor Day, Presidential Election Day, Veterans Day, Thanksgiving Day, Christmas Day.

NEW JERSEY DEPARTMENT OF LABOR AND WORKFORCE DEVELOPMENT

PREVAILING WAGE RATE DETERMINATION

County - MIDDLESEX

Craft: Laborer - Asbestos & Hazardous Waste Removal **PREVAILING WAGE RATE**

	08/09/22
Foreman	W41.38 B24.21 T65.59
Journeyman (Handler)	W36.78 B24.21 T60.99

Craft: Laborer - Asbestos & Hazardous Waste Removal **APPRENTICE RATE SCHEDULE**

INTERVAL	PERIOD AND RATES									
Yearly	22.07	25.75	29.42	33.10						
Benefit	22.06	for	all	intervals						

Ratio of Apprentices to Journeymen - *

* Ratio of apprentices to journeymen shall not be more than one apprentice for the first journeyman and no more than one (1) apprentice for each additional three (3) journeymen.

Craft: Laborer - Asbestos & Hazardous Waste Removal **COMMENTS/NOTES**

NOTE: These rates apply to work in connection with Asbestos, Radiation, Hazardous Waste, Lead, Chemical, Biological, Mold Remediation and Abatement.

The regular workday shall be 8 hours.

OVERTIME:
- Hours in excess of 8 per day, Monday through Saturday, and all hours on Sunday and holidays shall be paid at time and one-half the regular rate.
- Benefits on ALL overtime hours shall be paid at straight time.

RECOGNIZED HOLIDAYS: New Year's Day, President's Day, Easter, Memorial Day, July 4th, Labor Day, Veterans Day, Thanksgiving Day, Christmas Day. (Holidays start at 12:00 am).

NEW JERSEY DEPARTMENT OF LABOR AND WORKFORCE DEVELOPMENT

PREVAILING WAGE RATE DETERMINATION

County - MIDDLESEX

Craft: Laborer - Building **PREVAILING WAGE RATE**

	11/15/22
Class A Journeyman	W36.75 B31.42 T68.17
Class B Journeyman	W36.00 B31.42 T67.42
Class C Journeyman	W30.60 B31.42 T62.02
Foreman	W41.34 B31.42 T72.76
General Foreman	W45.94 B31.42 T77.36

Craft: Laborer - Building **APPRENTICE RATE SCHEDULE**

INTERVAL	**PERIOD AND RATES**									
6 Months	60%	70%	80%	90%	of Class B	wage rate				
Benefit	28.17	28.17	28.17	28.17						

Ratio of Apprentices to Journeymen - *

* Ratio of apprentices to journeymen shall not be more than one apprentice for the first journeyman and no more than one (1) apprentice for each additional three (3) journeymen.

Craft: Laborer - Building **COMMENTS/NOTES**

CLASS A: Specialist laborer including mason tender or concrete pour crew; scaffold builder (scaffolds up to 14 feet in height); operator of forklifts, Bobcats (or equivalent machinery), jack hammers, tampers, motorized tampers and compactors, vibrators, street cleaning machines, hydro demolition equipment, riding motor buggies, conveyors, burners; and nozzlemen on gunite work.
CLASS B: Basic laborer - includes all laborer work not listed in Class A or Class C.
CLASS C: Janitorial-type light clean-up work associated with the TURNOVER of a project, or part of a project, to the owner. All other clean-up work is Class B.

The regular workday shall be 8 hours between 6:00 AM and 6:00 PM.

SHIFT DIFFERENTIALS:
- Shift work must run for a minimum of 5 consecutive workdays.
- When a 2-shift schedule is worked, including a day shift, both shifts shall be established on the basis of 8 hours pay for 8 hours worked. The second shift shall receive the regular rate plus an additional 10%.
- When a 3-shift schedule is worked, the day shift shall be established on the basis of 8 hours pay for 8 hours worked, the second shift shall be established on the basis of 8 hours pay for 7.5 hours worked, and the third shift shall be established

on the basis of 8 hours pay for 7 hours worked. The day shift shall receive the regular rate, the second shift shall receive the regular rate plus an additional 10%, and the third shift shall receive the regular rate plus an additional 15%.
- When a second or third shift is worked with no day shift, the second or third shift shall be established on the basis of 8 hours pay for 8 hours worked. The second shift shall receive the regular rate plus an additional 10%, and the third shift shall receive the regular rate plus an additional 15%.
- When an irregular shift must be established this shift shall receive the regular rate plus an additional 10%.

OVERTIME:
- Hours in excess of 8 per day, or outside the regular workday that are not shift work, Monday through Friday, and all hours on Saturdays shall be paid at time and one-half the regular rate. Saturday may be used as a make-up day (paid at straight time) for a day lost to inclement weather, or for a holiday that is observed during the work week, Monday through Friday. All hours on Sundays and holidays shall be paid at double the regular rate.
- Four 10-hour days may be worked Monday to Thursday, at straight time, with Friday used a make-up day for a day lost to inclement weather. If Friday is not a make-up day, all hours on Friday shall be paid at time and one-half the regular rate.
- Benefits on ALL overtime hours shall be paid at time and one-half.

RECOGNIZED HOLIDAYS: New Year's Day, Presidents' Day, Memorial Day, July 4th, Labor Day, Veterans Day, Thanksgiving Day, Christmas Day. Sunday holidays observed the following Monday.

NEW JERSEY DEPARTMENT OF LABOR AND WORKFORCE DEVELOPMENT

PREVAILING WAGE RATE DETERMINATION

County - MIDDLESEX

Craft: Laborer - Heavy & General **PREVAILING WAGE RATE**

Rates are located in the
"Statewide" rate package

Craft: Laborer - Heavy & General **APPRENTICE RATE SCHEDULE**

INTERVAL	PERIOD AND RATES									
1000 Hours	60%	70%	80%	90%						
Benefit	23.38	for	all	intervals						

Ratio of Apprentices to Journeymen - *

* No more than 1 apprentice for the first journeyman and no more than 1 apprentice for each additional 3 journeymen.

Craft: Laborer - Heavy & General **COMMENTS/NOTES**

Heavy & General Laborer rates are located in the "Statewide" rate package.

NEW JERSEY DEPARTMENT OF LABOR AND WORKFORCE DEVELOPMENT

PREVAILING WAGE RATE DETERMINATION

County - MIDDLESEX

Craft: Laborer-Residential and Modular Construction **PREVAILING WAGE RATE**

	04/01/22	04/01/23
* Skilled Tradesman (only applies to Modular Construction)	W27.55 B5.45 T33.00	W27.90 B5.45 T33.35
Foreman (person directing crew, regardless of his skill classification)	W31.55 B5.45 T37.00	W31.90 B5.45 T37.35
Laborer (for single family and stand-alone duplex owned by single owner)	W17.50 B2.95 T20.45	W17.85 B2.95 T20.80
Residential and Modular Construction Laborer	W23.55 B5.45 T29.00	W23.90 B5.45 T29.35

Craft: Laborer-Residential and Modular Construction **APPRENTICE RATE SCHEDULE**

INTERVAL	PERIOD AND RATES									
As shown	800 hours	600 hours	600 hours							
wage & benefits	70%	80%	90%							

Ratio of Apprentices to Journeymen-

One (1) apprentice shall be allowed for the first journeyman on site and no more than one (1) additional apprentice for each additional three (3) journeymen on site.

Craft: Laborer-Residential and Modular Construction **COMMENTS/NOTES**

* SKILLED TRADESMAN-
any worker doing work not typically done by a Building Laborer. Some examples are installing interior doors, sheet rock, hooking up appliances, installing light fixtures, installing railing systems, etc. Please note where local building codes require that certain work be performed under the supervision of a licensed tradesman (i.e. Plumber, Electrician, etc.) Laborers shall work under such supervision.

RESIDENTIAL CONSTRUCTION- All residential construction (not commercial), single-family, stand-alone duplex houses, townhouses and multi-family buildings of not more than four (4) floors. Each housing unit must be fully and independently functional; each housing unit must have its own kitchen and bathroom. The definition includes all incidental items such as site work, parking areas, utilities, streets and sidewalks. Please note the construction must be Residential in nature. A First Floor at or below grade may contain commercial space not to exceed 50% square footage of the floor; at least 50% of the First Floor must contain living accommodations or related nonresidential uses (e.g. laundry space, recreation/hobby rooms, and/or corridor space). Basement stories below grade used for storage, parking, mechanical systems/equipment, etc., are considered basement stories which are not used in determining the building's height. An attic is an unfinished space located immediately below the roof. Such space is not used in determining a building's height even if used for storage purposes. In addition, barracks and dormitories are not considered residential projects.

MODULAR RESIDENTIAL CONSTRUCTION- all aspects of modular residential construction (not commercial) at the site of installation of structures of no more than four (4) stories, including all excavation and site preparation, footings and

foundation systems whether poured on-site or prefabricated, all underground waterproofing, underground utilities, concrete slabs, sidewalks, driveways, paving, hardscape and landscaping. Please note the construction must be Residential as defined above. All work performed by the Set Crew (the crew of workers who set the modular boxes on the foundation), including the rigging, setting, attaching and assembly of all modules and structural members, preparation of the foundation to accept modules, such as sill plates, connection of all in-module and under-module connections including, but not limited to, plumbing, electrical, HVAC, fire suppression, CATS, telephone, television/internet, and fiber optic, the building or installation of any porches or decks regardless of material or method of construction, the on-site installation of, or completion of any roof system, doors, windows and fenestrations, including flashing, gutter and soffit systems, waterproofing, insulation and interior and exterior trim work, and painting. Please note that modular construction does not include on-site stick built construction, tip up construction or panel built construction.

The regular workday shall be 8 hours between 6:00 AM and 6:00 PM.

OVERTIME:
Hours worked in excess of 8 per day/40 per week, Monday through Saturday, and all hours worked on Sunday and holidays shall be paid at time and one-half the hourly rate.

RECOGNIZED HOILDAYS:
New Year's Day, Martin Luther King Day, Memorial Day, July 4th, Labor Day, Thanksgiving Day and Christmas Day.

NEW JERSEY DEPARTMENT OF LABOR AND WORKFORCE DEVELOPMENT

PREVAILING WAGE RATE DETERMINATION

County - MIDDLESEX

Craft: Millwright **PREVAILING WAGE RATE**

	06/20/22
Foreman	W62.42 B35.32 T97.74
Journeyman	W54.28 B32.80 T87.08

Craft: Millwright **APPRENTICE RATE SCHEDULE**

INTERVAL	PERIOD AND RATES									
6 Months	40%	55%	65%	80%	90%					
Benefit	31% of	Appren	tice	Wage	Rate	for all	intervals	+ $15.97		

Ratio of Apprentices to Journeymen - 1:3

Craft: Millwright **COMMENTS/NOTES**

FOREMAN REQUIREMENTS:
- When there are 2 or more Millwrights on a job, 1 shall be designated as a Foreman.

The regular workday shall consist of 8 hours, starting between 6:00 AM and 9:00 AM.

SHIFT DIFFERENTIALS:
- When a 2 shift schedule (including a day shift) is established, the day shift shall be established on an 8 hour basis. The second shift shall be established on an 8 hour basis, and receive the regular rate plus 15%, inclusive of benefits.
- When a three shift schedule is established, the first shift shall be established on an 8 hour basis, the second shift on a 7.5 hour basis, and the third shift on a 7 hour basis. The first shift shall receive the regular hourly rate, the second shift shall receive the regular rate plus 15% and the third shift shall receive the regular rate plus 20%, inclusive of benefits.
- When there is no day shift, and a second or third shift is established, it shall be established on an 8 hour basis. The second shift shall receive the regular rate plus 15% and the third shift shall receive the regular rate plus 20%, inclusive of benefits.
- When an irregular shift must be established, this shift shall receive the regular rate plus 15%, inclusive of benefits.

OVERTIME:
- All hours in excess of 8 per day, or before or after an established shift that are not shift work, and all hours on Saturdays shall be paid at time and one-half the hourly rate, inclusive of benefits. All hours on Sundays and holidays shall be paid at double the hourly rate, inclusive of benefits.
- Four 10-hour days may be worked, Monday to Thursday, at straight time. Friday may be used as a make-up day for a day lost due to inclement weather. If Friday is not a make-up day, all hours on Friday shall be paid at time and one-half the hourly rate, inclusive of benefits.

RECOGNIZED HOLIDAYS: New Year's Day, Presidents' Day, Memorial Day, July 4th, Labor Day, Veterans' Day, Thanksgiving Day, Christmas Day. Sunday holidays will be observed the following Monday. Veterans' Day may be substituted for the day after Thanksgiving.

NEW JERSEY DEPARTMENT OF LABOR AND WORKFORCE DEVELOPMENT

PREVAILING WAGE RATE DETERMINATION

County - MIDDLESEX

Craft: Operating Engineer **PREVAILING WAGE RATE**

Rates are located in the
"Statewide" rate package

Craft: Operating Engineer **APPRENTICE RATE SCHEDULE**

INTERVAL	PERIOD AND RATES									
Yearly	60%	70%	80%	90%						

Ratio of Apprentices to Journeymen - *

* 1 apprentice for each piece of heavy equipment. At least 10 pieces of heavy equipment or a minimum of 5 Operating Engineers must be on site.

Craft: Operating Engineer **COMMENTS/NOTES**

Operating Engineer rates are located in the "Statewide" rate package.

NEW JERSEY DEPARTMENT OF LABOR AND WORKFORCE DEVELOPMENT

PREVAILING WAGE RATE DETERMINATION

County - MIDDLESEX

Craft: Operating Engineer - Field Engineer **PREVAILING WAGE RATE**

Rates are located in the
"Statewide" rate package

Craft: Operating Engineer - Field Engineer **APPRENTICE RATE SCHEDULE**

INTERVAL	PERIOD AND RATES									
Yearly	70%	75%	of Rod/	Chainman	Wage					
Yearly			80%	90%	Transit/	Instrument	man	Wage		

Ratio of Apprentices to Journeymen - *

* No more than 1 Field Engineer Apprentice per Survey Crew.

Craft: Operating Engineer - Field Engineer **COMMENTS/NOTES**

Operating Engineer - Field Engineer rates are located in the "Statewide" rate package.

NEW JERSEY DEPARTMENT OF LABOR AND WORKFORCE DEVELOPMENT

PREVAILING WAGE RATE DETERMINATION

County - MIDDLESEX

Craft: Painter - Line Striping **PREVAILING WAGE RATE**

	12/07/22
Apprentice (1st year)	W29.15 B14.75 T43.90
Apprentice (2nd year)	W33.25 B25.70 T58.95
Foreman (Charge Person)	W42.05 B26.48 T68.53
Journeyman 1 (at least 1 year of working exp. as a journeyman)	W37.28 B26.48 T63.76
Journeyman 2 (at least 2 years of working exp. as a journeyman)	W41.05 B26.48 T67.53

Craft: Painter - Line Striping **COMMENTS/NOTES**

OVERTIME:
Hours in excess of 8 per day, Monday through Saturday, and all hours on Sundays and holidays shall be paid at time and one-half the hourly rate.

RECOGNIZED HOLIDAYS: New Year's Day, Presidents' Day, Memorial Day, July 4th, Labor Day, Veterans Day, Thanksgiving Day and Christmas Day. Veterans Day may be substituted for the day after Thanksgiving.

NEW JERSEY DEPARTMENT OF LABOR AND WORKFORCE DEVELOPMENT

PREVAILING WAGE RATE DETERMINATION

County - MIDDLESEX

Craft: Paperhanger **PREVAILING WAGE RATE**

	05/18/22
Foreman	W51.90 B28.21 T80.11
Journeyman	W47.19 B28.21 T75.40

Craft: Paperhanger **APPRENTICE RATE SCHEDULE**

INTERVAL	PERIOD AND RATES									
	SEE	COMMER	CIAL	PAINTER						

Craft: Paperhanger **COMMENTS/NOTES**

FOREMEN REQUIREMENTS:
- When there are 4 or more Paperhangers on a job, 1 shall be designated a Foreman.

The regular workday shall consist of 8 hours between 7:00 AM and 5:30 PM.

SHIFT DIFFERENTIALS:
- The second shift shall receive an additional 10% of the hourly rate, per hour, and the third shift shall receive an additional 15% of the hourly rate, per hour.

OVERTIME:
- Hours in excess of 8 per day, Monday through Friday, and all hours on Saturdays shall be paid at time and one-half the regular rate. All hours on Sundays and holidays shall be paid at double the regular rate.
- Saturday or Sunday may be used to make up a day lost to inclement weather, at straight time.
- Four 10-hour days may be worked, at straight time, Monday through Friday.

RECOGNIZED HOLIDAYS: New Year's Day, President's Day, Memorial Day, July 4th, Labor Day, General Election Day, Veterans Day, Thanksgiving Day, Christmas Day

County - MIDDLESEX

Craft: Pipefitter **PREVAILING WAGE RATE**

.

Craft: Pipefitter **COMMENTS/NOTES**

See PLUMBERS Rates

County - MIDDLESEX

Craft: Plasterer **PREVAILING WAGE RATE**

See "Cement Mason" Rates

Craft: Plasterer **COMMENTS/NOTES**

See CEMENT MASON Rates

NEW JERSEY DEPARTMENT OF LABOR AND WORKFORCE DEVELOPMENT

PREVAILING WAGE RATE DETERMINATION

County - MIDDLESEX

Craft: Plumber **PREVAILING WAGE RATE**

	07/01/22
Assistant General Foreman	W58.20 B44.10 T102.30
Foreman	W57.66 B44.10 T101.76
General Foreman	W60.87 B44.10 T104.97
Journeyman	W53.39 B44.10 T97.49

Craft: Plumber **APPRENTICE RATE SCHEDULE**

INTERVAL	PERIOD AND RATES									
Yearly	35%	45%	55%	65%	75%					
Benefits	27.28	29.86	32.45	35.04	37.63					

Ratio of Apprentices to Journeymen - 1:4

Craft: Plumber **COMMENTS/NOTES**

The regular workday shall consist of 8 hours between 6:00 AM and 4:30 PM.

FOREMAN REQUIREMENTS (number of Plumbers on site):
- (1to 8)- 1 Foreman
- (9 to 16)- 1 Foreman and 1 Assistant General Foreman
- (17 to 40)- 1 Foreman for every (1 to 8 Plumbers) and 1 Assistant General Foreman every (1 to 5 gangs). One note, a "gang" is a group of 8 men.
- (41 and more)- 1 Foreman for every (1 to 8 Plumbers), 1 Assistant General Foreman every (1 to 5 gangs) and 1 General Foreman. One note, for every additional Assistant General Foreman over five designated, the General Foreman shall receive an additional 10 cents per hour.

SHIFT DIFFERENTIALS:
-The second shift shall work 7.5 hours and receive 8 hours pay, at a rate equal to the hourly rate plus 25%, inclusive of benefits.
- When a third shift is worked, the third shift shall work 7.5 hours and receive 8 hours pay, at a rate equal to the hourly rate plus 30%, inclusive of benefits.
- A second shift may be established without a first shift, provided the second shift starts at 1:00 PM or later.

OVERTIME:
- Hours in excess of 8 per day, or before of after the regular workday, Monday through Friday, that are not shift work, and the first 10 hours on Saturdays, shall be paid at time and one-half, inclusive of benefits. Hours in excess of 10 on

Saturdays, and all hours on Sundays and holidays, shall be paid at double time, inclusive of benefits.
- Four 10-hour days may be worked, Mon to Thurs, at straight time, with Friday used as a make-up day for a day lost due to inclement weather. If Fri. is not a make-up day, the first 10 hours shall be paid at time and one-half, and hours in excess of 10 at double time, inclusive of benefits.

RECOGNIZED HOLIDAYS: New Year's Day, Presidents' Day, Memorial Day, July 4th, Labor Day, Presidential Election Day, Veterans' Day, Thanksgiving Day, Christmas Day. Sunday holidays will be observed the following Monday.

NEW JERSEY DEPARTMENT OF LABOR AND WORKFORCE DEVELOPMENT

PREVAILING WAGE RATE DETERMINATION

County - MIDDLESEX

Craft: Roofer **PREVAILING WAGE RATE**

	06/01/22
Foreman	W45.52 B29.81 T75.33
Journeyman	W42.52 B29.81 T72.33

Craft: Roofer **APPRENTICE RATE SCHEDULE**

INTERVAL	PERIOD AND RATES									
6 Months	17.00	21.26	25.51	27.64	29.76	31.89	34.01	38.27		
Benefits	2.16	2.16	26.56	26.56	26.56	26.56	26.56	26.56		

Ratio of Apprentices to Journeymen - *

* [A] For roofing jobs that are of the 1 or single ply nature: 1:2 or fraction thereof
[B] For roofing jobs on new built up roofs: 1:3 or fraction thereof
[C] For roofing jobs that are of a tear-off nature: 1:2 or fraction thereof
[D] For re-roofing jobs {not requiring complete removal of existing systems; installation done over existing roof}: 1:3 or fraction thereof

Craft: Roofer **COMMENTS/NOTES**

Pitch: +.50 per hour

Mop Man: +.30 per hour

The regular workday consists of 8 hours between 8:00 AM and 4:30 PM.

OVERTIME:
Hours in excess of 8 per day, or before or after the regular workday, Monday through Friday, and all hours on Saturdays, Sundays, and holidays shall be paid at time and one-half the regular rate.

RECOGNIZED HOLIDAYS: New Year's Day, Good Friday, Memorial Day, July 4th, Labor Day, Presidential Election Day, Veterans' Day, Thanksgiving Day, Christmas Day.

NEW JERSEY DEPARTMENT OF LABOR AND WORKFORCE DEVELOPMENT

PREVAILING WAGE RATE DETERMINATION

County - MIDDLESEX

Craft: Sheet Metal Sign Installation **PREVAILING WAGE RATE**

	04/01/22
Foreman	W41.29 B38.97 T80.26
Journeyman	W39.29 B38.97 T78.26

Craft: Sheet Metal Sign Installation **APPRENTICE RATE SCHEDULE**

INTERVAL	PERIOD AND RATES									
1000 hours	35%	40%	45%	50%	55%	60%	65%	70%	75%	80%
Benefits	13.19	15.02	16.88	18.74	21.06	22.94	24.83	26.73	28.62	30.50

Ratio of Apprentices to Journeymen - 1:3

Craft: Sheet Metal Sign Installation **COMMENTS/NOTES**

FOREMAN REQUIREMENT:
When there are 6 or more Sheet Metal Sign Installers on a job, 1 shall be designated a Foreman.

The regular workday consists of 8 hours, between 7:00 AM and 3:30 PM.

OVERTIME:
Hours before or after the regular workday, Monday though Friday, and all hours worked on Saturday shall be paid at time and one-half the hourly rate. All hours on Sunday and holidays shall be paid at double the hourly rate.

Four(4) 10 hour days may be worked, Monday through Friday, at straight time, for projects lasting at least one week in duration. The fifth day may be used as a make-up day at straight time for a day lost due to inclement weather. However, if the fifth day is not a make-up day, all hours worked will be paid at time and one-half the hourly rate.

RECOGNIZED HOLIDAYS: New Year's Day, Presidents' Day, Good Friday, Memorial Day, July 4th, Labor Day, Veterans' Day, Thanksgiving Day and the day after, Christmas Day. Saturday holidays observed the preceding Friday, Sunday holidays observed the following Monday.

NEW JERSEY DEPARTMENT OF LABOR AND WORKFORCE DEVELOPMENT

PREVAILING WAGE RATE DETERMINATION

County - MIDDLESEX

Craft: Sheet Metal Worker **PREVAILING WAGE RATE**

	06/01/22
Foreman	W58.08 B45.74 T103.82
Journeyman	W54.58 B45.74 T100.32

Craft: Sheet Metal Worker **APPRENTICE RATE SCHEDULE**

INTERVAL	PERIOD AND RATES									
6 months	40%	45%	50%	55%	60%	65%	70%	75%	80%	85%
Benefits	14.26	15.93	17.61	19.26	20.93	29.26	31.46	33.62	35.80	37.98

Ratio of Apprentices to Journeymen- 1:3, except for the following types of work where the ratio shall be 1:1 (architectural metal work, testing and balancing, lockers, shelving and toilet partitions).*
* For work performed in a fabrication shop, the ratio will be applied on a "company-wide" basis (i.e. the total number of apprentices and journeymen employed by the company).

.

Craft: Sheet Metal Worker **COMMENTS/NOTES**

JOB SITE FOREMAN REQUIREMENTS:
- When there are 2 to 9 Sheet Metal Workers on a jobsite, 1 must be designated a Foreman.
- When there are 10 to 16 Sheet Metal Workers on a job site, 2 must be designated Foremen.
- When there are 17 to 23 Sheet Metal Workers on a job site, 3 must be designated Foremen.
- For every 7 addtional Sheet Metal Workers on a job site, there shall be 1 additional Foreman.

SHOP FOREMAN REQUIREMNTS (For custom fabrication):
- When there are 1 to 10 Sheet Metal Workers in the shop, 1 must be designated a Foreman.
- For every 10 additional Sheet Metal Workers in the shop, 1 must be designated a Foreman.

The regular workday consists of 8 hours, between 6:00 AM and 4:30 PM.

SHIFT DIFFERENTIALS:
- Shift work must run for a minimum of 5 consecutive workdays.
- There must be a day shift worked in order to have a 2nd and/or 3rd Shift.
- Shop work does not satisfy shift requirements.
- 2nd Shift (4:30 PM-12:30 AM) shall be paid an additional 15% of the regular rate per hour inclusive of benefits, and receive 8 hours pay for 7.5 hours of work.
- 3rd Shift (12:30 AM-8:00 AM) shall be paid an additional 25% of the regular rate per hour inclusive of benefits, and receive 8 hours pay for 7 hours of work.

OVERTIME:
Hours in excess of 8 per day, or before or after the regular workday, Monday through Friday, that are not shift work, and all

hours on Saturday, shall be paid at time and one-half the regular rate. All hours on Sundays and holidays shall be paid at double the regular rate.
- Benefits on overtime hours are as follows:
Time and one-half = $53.04.
Double-time = $60.34.

RECOGNIZED HOLIDAYS: New Year's Day, Presidents' Day, Good Friday, Memorial Day, July 4th, Labor Day, Presidential Election Day, Veterans' Day, Thanksgiving Day, Christmas Day. Saturday holidays will be observed the preceding Friday, Sunday holidays will be observed the following Monday.

NEW JERSEY DEPARTMENT OF LABOR AND WORKFORCE DEVELOPMENT

PREVAILING WAGE RATE DETERMINATION

County - MIDDLESEX

Craft: Sprinkler Fitter **PREVAILING WAGE RATE**

	07/01/22	01/01/23
Foreman	W70.38 B35.24 T105.62	W69.82 B35.80 T105.62
General Foreman	W73.78 B35.24 T109.02	W73.15 B35.80 T108.95
Journeyman	W65.88 B35.24 T101.12	W65.32 B35.80 T101.12

Craft: Sprinkler Fitter **APPRENTICE RATE SCHEDULE**

INTERVAL	PERIOD AND RATES									
1000 hours									80%	85%
Benefits							Intervals	9 to 10	Jourymn	Ben.

Ratio of Apprentices to Journeymen - 1:3

Craft: Sprinkler Fitter **COMMENTS/NOTES**

Apprentice rate schedule for those apprentices registered as of 7-1-13:

Interval Period and Rates
1000 Hrs. 25% 30% 40% 45% 55% 60% 70% 75% 85% 90%
Ben. 13.60 13.60 28.30 28.30 28.30 28.30 Intervals 7-10 Journy. Ben.

Apprentice rate schedule for those apprentices registered as of 7-1-22:

Interval Period and Rates
1000 Hrs. 30% 35% 40% 45% 50% 55% 60% 70% 85% 95%
Ben. 13.60 13.60 28.30 28.30 28.30 28.30 Intervals 7-10 Journy. Ben

The regular workday consists of 8 consecutive hours between 6:00 AM and 4:30 PM.

FOREMAN REQUIREMENTS:
- The first Sprinkler Fitter on the job must be designated a Foreman.
- On any job having 12 or more Sprinkler Fitters, one must be designated a General Foreman.

SHIFT DIFFERENTIALS:
- Shift work must run for a minimum of 2 consecutive workdays.
- 2nd and 3rd shift shall receive an additional 15% of the regular rate, per hour.
- Any "off hours" shift starting at 8:00 PM or later shall receive an additional 25% of the regular rate, per hour.

OVERTIME:
The first 2 hours in excess of 8 per day, after the regular workday that are not shift work, Monday through Friday, shall be

paid at time and one-half the regular rate. Hours worked in excess of 10 per day, Monday through Friday, and all hours on Saturday, Sunday and holidays, shall be paid double the regular rate.
Four 10 hour days may be worked, Monday through Friday, at straight-time.

RECOGNIZED HOLIDAYS: New Year's Day, Presidents' Day, Memorial Day, July 4th, Labor Day, Veterans Day, Thanksgiving Day, Christmas Day.

NEW JERSEY DEPARTMENT OF LABOR AND WORKFORCE DEVELOPMENT

PREVAILING WAGE RATE DETERMINATION

County - MIDDLESEX

Craft: Tile Finisher-Marble **PREVAILING WAGE RATE**

	07/05/22	01/02/23
Finisher	W49.20 B36.21 T85.41	W49.32 B36.62 T85.94

Craft: Tile Finisher-Marble **APPRENTICE RATE SCHEDULE**

INTERVAL	PERIOD AND RATES									
750 Hours	40%	60%	65%	70%	75%	85%	95%			
Benefits	Interval 1	thru 5 =	75% of	jyrnm. ben	rate	Interval 6	thru 7 =	full jyrnm	benefit	rate

Ratio of Apprentices to Journeymen - 1:4

Craft: Tile Finisher-Marble **COMMENTS/NOTES**

OVERTIME:
Hours in excess of 7 per day, Monday through Friday, and the first 7 hours on Saturdays shall be paid at time and one half the regular rate, inclusive of benefits. Hours in excess of 7 on Saturdays and all hours on Sundays and holidays shall be paid at double the regular rate, inclusive of benefits.

RECOGNIZED HOLIDAYS: New Year's Day, Presidents' Day, Good Friday, Memorial Day, July 4th, Labor Day, Columbus Day, Veterans' Day, Thanksgiving Day and the day after, Christmas Day. Sunday holidays observed the following Monday.

NEW JERSEY DEPARTMENT OF LABOR AND WORKFORCE DEVELOPMENT

PREVAILING WAGE RATE DETERMINATION

County - MIDDLESEX

Craft: Tile Setter - Ceramic **PREVAILING WAGE RATE**

	12/05/22
Finisher	W48.04 B32.26 T80.30
Setter	W62.62 B35.39 T98.01

Craft: Tile Setter - Ceramic **APPRENTICE RATE SCHEDULE**

INTERVAL	PERIOD AND RATES									
750 Hours	35%	40%	50%	55%	60%	65%	70%	75%	80%	90%

Ratio of Apprentices to Journeymen - 1:4

Craft: Tile Setter - Ceramic **COMMENTS/NOTES**

OVERTIME:
Hours in excess of 7 per day, and the first 10 hours on Saturdays shall be paid at time and one-half the hourly rate. All hours on Saturdays after 10 hours shall be paid double the hourly rate. All hours on Sundays and holidays shall be paid at double the hourly rate.

RECOGNIZED HOLIDAYS: New Year's Day, Memorial Day, July 4th, Labor Day, Thanksgiving Day, Christmas Day.

NEW JERSEY DEPARTMENT OF LABOR AND WORKFORCE DEVELOPMENT

PREVAILING WAGE RATE DETERMINATION

County - MIDDLESEX

Craft: Tile Setter - Marble **PREVAILING WAGE RATE**

	07/05/22	01/02/23
Tile Setter	W62.40 B38.82 T101.22	W62.82 B39.03 T101.85

Craft: Tile Setter - Marble **APPRENTICE RATE SCHEDULE**

INTERVAL	PERIOD AND RATES									
750 Hours	40%	60%	65%	70%	75%	85%	95%			
Benefits	Interval 1	thru 5 =	75% of	jrynm. ben	rate	Interval 6	thru 7 =	full jyrnm	benefit	rate

Ratio of Apprentices to Journeymen - 1:4

Craft: Tile Setter - Marble **COMMENTS/NOTES**

OVERTIME:
Hours in excess of 7 per day, Monday through Friday, and the first 7 hours on Saturdays shall be paid at time and one-half the regular rate, inclusive of benefits. Hours in excess of 7 on Saturdays, and all hours on Sundays and holidays shall be paid at double the regular rate, inclusive of benefits.

RECOGNIZED HOLIDAYS: New Year's Day, Presidents' Day, Good Friday, Memorial Day, July 4th, Labor Day, Columbus Day, Veterans' Day, Thanksgiving Day and the day after, Christmas Day. Sunday holidays observed the following Monday.

NEW JERSEY DEPARTMENT OF LABOR AND WORKFORCE DEVELOPMENT

PREVAILING WAGE RATE DETERMINATION

County - MIDDLESEX

Craft: Tile Setter - Mosaic & Terrazzo **PREVAILING WAGE RATE**

	07/01/22	01/01/23
Grinder or Assistant	W58.14 B38.59 T96.73	W58.67 B39.00 T97.67
Mechanic	W59.75 B38.60 T98.35	W60.28 B39.01 T99.29
Terrazzo Resinous Worker	W49.84 B31.32 T81.16	W50.32 B31.63 T81.95

Craft: Tile Setter - Mosaic & Terrazzo **APPRENTICE RATE SCHEDULE**

INTERVAL	PERIOD AND RATES									
750 Hours	50%	55%	60%	65%	70%	75%	85%	95%	100%	

Ratio of Apprentices to Journeymen - 1:5

Craft: Tile Setter - Mosaic & Terrazzo **COMMENTS/NOTES**

APPRENTICE RATE SCHEDULE FOR THOSE APPRENTICES ENTERING PROGRAM AFTER 7-1-17:

INTERVAL PERIOD AND RATES
1500 Hours 35% 45% 60% 70% 80% 90% 100%

The regular workday consists of 7 hours, between 8:00 AM and 3:30 PM.

OVERTIME:
- Hours in excess of 7 per day, or before or after the regular workday, Monday through Friday, and all hours on Saturdays shall be paid at time and one-half the hourly rate. All hours on Sundays and holidays shall be paid at double the hourly rate.

RECOGNIZED HOLIDAYS: New Year's Day, Presidents' Day, Good Friday, Monday after Easter, Memorial Day, July 4th, Labor Day, Columbus Day, Veterans' Day, Thanksgiving Day and the day after, Christmas Day. Sunday holidays observed the following Monday.

NEW JERSEY DEPARTMENT OF LABOR AND WORKFORCE DEVELOPMENT

PREVAILING WAGE RATE DETERMINATION

County - MIDDLESEX

Craft: Truck Driver **PREVAILING WAGE RATE**

	05/06/22	05/01/23	05/01/24
Bucket, Utility, Pick-up, Fuel Delivery trucks	W44.81 B36.92 T81.73	W0.00 B0.00 T85.08	W0.00 B0.00 T88.43
Dump truck (single axle), Asphalt Distributor, Tack Spreader	W44.81 B36.92 T81.73	W0.00 B0.00 T85.08	W0.00 B0.00 T88.43
Euclid-type vehicles (large off-road equipment)	W44.96 B36.92 T81.88	W0.00 B0.00 T85.23	W0.00 B0.00 T88.58
Helper on Asphalt Distributor truck	W44.81 B36.92 T81.73	W0.00 B0.00 T85.08	W0.00 B0.00 T88.43
Low Boy Driver	W46.46 B36.92 T83.38	W0.00 B0.00 T86.73	W0.00 B0.00 T90.08
Slurry Seal, Seeding/Fertilizing/Mulchi ng truck	W44.81 B36.92 T81.73	W0.00 B0.00 T85.08	W0.00 B0.00 T88.43
Straight 3-axle trucks, Dump Truck (3-axle), Dump Truck (tandem)	W44.86 B36.92 T81.78	W0.00 B0.00 T85.13	W0.00 B0.00 T88.48
Tractor-Trailer truck (all types)	W44.96 B36.92 T81.88	W0.00 B0.00 T85.23	W0.00 B0.00 T88.58
Vacuum or Vac-All truck (entire unit)	W44.81 B36.92 T81.73	W0.00 B0.00 T85.08	W0.00 B0.00 T88.43
Winch Trailer Driver	W45.06 B36.92 T81.98	W0.00 B0.00 T85.33	W0.00 B0.00 T88.68

Craft: Truck Driver **COMMENTS/NOTES**

Foreman: + $.75 cents per hour. Overtime rate shall be increased accordingly.

HAZARDOUS WASTE REMOVAL WORK:
- On a hazardous waste site requiring Level A, B, or C personal protection for any worker: + $3.00 per hour.
- On a hazardous waste site not designated Level A, B, or C: + $1.00 per hour.

The regular workday consists of 8 hours starting between 6:00 AM and 8:00 AM.

SHIFT DIFFERENTIAL:

Any shift starting at a time other than 6:00 AM or 8:00 AM shall receive an additional $3.00 per hour.

BLENDED RATE:
- When a truck driver is performing work on site and also serving as a material delivery driver, the driver shall be paid a "blended rate" which shall be 80% of the above-listed wage rates, plus the full benefit rate. This rate shall be used when the driver "round robins" for a minimum of 6 hours during the work day.

OVERTIME:
- Hours in excess of 8 per day, or before or after the regular workday that are not shift work, Monday through Friday, and all hours on Saturdays shall be paid at time and one-half the hourly rate. All hours on Sundays and holidays shall be paid at double the hourly rate.
- Benefits on overtime shall be $43.44.

- Four 10-hour days may be worked, Monday through Thursday, at straight time, with Friday used as a make-up day for a day lost to inclement weather. If Friday is not a make-up day, all hours on Friday shall be paid at time and one-half the hourly rate.

RECOGNIZED HOLIDAYS: New Year's Day, Presidents' Day, Memorial Day, July 4th, Labor Day, Veteran's Day, Thanksgiving Day, Christmas Day. Veteran's Day may be substituted for the day after Thanksgiving. Sunday holidays will be observed the following Monday.

NEW JERSEY DEPARTMENT OF LABOR AND WORKFORCE DEVELOPMENT

PREVAILING WAGE RATE DETERMINATION

County - MIDDLESEX

Craft: Truck Driver-Material Delivery Driver **PREVAILING WAGE RATE**

	05/06/22	05/01/23	05/01/24
Driver	W35.84 B36.92 T72.76	W0.00 B0.00 T76.95	W0.00 B0.00 T81.14
New Hires: 1st Year	W35.84 B36.92 T72.76	W0.00 B0.00 T76.95	W0.00 B0.00 T81.14

Craft: Truck Driver-Material Delivery Driver **COMMENTS/NOTES**

NOTE: These rates may only be used for the delivery of *materials TO the job site (*building materials that will become a permanent part of the job site, such as sand, stone, aggregates, asphalt, sheetrock, 2x4's, etc.). In addition, only the following types of truck may be used for such deliveries (Dump Truck or Flat-bed truck). Please note that this rate does not apply to material suppliers or their employees (who do not perform services at the job site), and for the delivery of equipment and/or items that will not become a permanent part of the job site.

OVERTIME: Hours in excess of 8 per day, Monday through Friday, and all hours on Saturdays shall be paid at time and one-half the hourly rate. All hours on Sundays and holidays shall be paid at double the hourly rate. Benefits on overtime shall be $43.44.

RECOGNIZED HOLIDAYS: New Year's Day, President's Day, Memorial Day, July 4th, Labor Day, Veterans's Day, Thanksgiving Day, Christmas Day. Veteran's Day may be substituted for the day after Thanksgiving. Sunday holidays will be observed the following Monday.

County - MIDDLESEX

Craft: Welder **PREVAILING WAGE RATE**

Welder

Craft: Welder **COMMENTS/NOTES**

Welders rate is the same as the craft to which the welding is incidental.

STATEWIDE RATES

TERRITORY

ENTIRE STATE

NEW JERSEY DEPARTMENT OF LABOR AND WORKFORCE DEVELOPMENT

PREVAILING WAGE RATE DETERMINATION

OPERATING ENGINEERS **Rates Expiration Date :**

{For apprentice rates refer to "Operating Engineers" apprentice rates in any county rate package}

The regular workday consists of 8 hours, Monday to Friday, between 6:00 AM and 5:30 PM.

SHIFT DIFFERENTIALS:
- Shift work must be established for 5 consecutive workdays.
- Any work started outside of the allowed start time, 6:00 AM to 9:00 AM, except for * tidal work, shall be considered an irregular shift and paid at straight time, plus 15% for the first eight hours, inclusive of benefits.
- * FOR TIDAL WORK- a contractor can start their job according to tide schedules (tide schedules are the various high and low tides related to this work), providing the eight hour shift is completed between the hours of 5:00 AM and 6:30 PM.
- All time worked in excess of an established shift (an established shift is a shift that is determined at the time of the bid) shall be paid at the applicable overtime rate. When a portion of an established shift works into Saturday, Sunday or a holiday, that time worked shall be paid at the established shift rate.
- When working with other trades who receive a higher irregular shift differential, these employees shall also receive the higher differential rate.

OVERTIME:
- Hours in excess of 8 per day, or outside of the regular workday, Monday through Friday, that are not shift work, and all hours on Saturday shall be paid at time and one-half the regular rate, inclusive of benefits. All hours on Sunday and holidays shall be paid at double the regular rate, inclusive of benefits.
- Four 10-hour days may be worked, Monday through Thursday, at straight time, with all hours on Friday paid at time and one-half the regular rate, inclusive of benefits.

RECOGNIZED HOLIDAYS: New Year's Day, Presidents' Day, Memorial Day, July 4th, Labor Day, Presidential Election Day, Veterans Day, Thanksgiving Day, Christmas Day. Sunday holidays observed the following Monday. When all trades on a particular job site agree, the day after Thanksgiving may be substituted for Veterans Day.

For projects bid after April 1, 2020, on hazardous waste removal work of any kind, including a state or federally designated site, where the operating engineer is required to wear level A, B, or C personal protection, the operating engineer shall receive an hourly wage rate of his regular hourly wage plus $5.00 per hour.
- An operating engineer working at a hazardous waste removal project or site at a task requiring hazardous waste related certification, but who is not working in a zone requiring level A, B, or C personal protection, shall receive an hourly wage rate of his regular rate plus $1.00 per hour.

OPERATING ENGINEERS **Rates Expiration Date :**

Effective Dates:

	07/01/2022	
Rate	Fringe	Total
55.63	36.65	92.28

CLASSIFICATIONS:

A-Frame

Backhoe (combination)

Boom Attachment on loaders (Except pipehook)

Boring & Drilling Machine

Brush Chopper, Brush Shredder, Tree Shredder, Tree Shearer

Bulldozer, finish grade

Cableway

Carryall

Concrete Pump

Concrete Pumping System (Pumpcrete & similar types)

Conveyor, 125 feet or longer

Drill Doctor (Duties include dust collector and maintenance)

Front End Loader (2 cu. yds. but less than 5 cu. yds.)

Grader, finish

Groove Cutting Machine (ride-on type)

Heater Planer

Hoist: Outside Material Tower Hoist (all types including steam, gas, diesel, electric, air hydraulic, single and double drum, concrete, brick shaft caisson, snorkle roof, and other similar types, Except Chicago-boom type) * receives an addtional $1.00 per hour on 100 ft. up to 199 ft. total height, and an additional $2.00 per hour on 200 ft. and over total height.

Hydraulic Crane (10 tons & under)

Hydraulic Dredge

Hydro-Axe

Hydro-Blaster

OPERATING ENGINEERS **Rates Expiration Date :**

Effective Dates:

07/01/2022

Rate	Fringe	Total
55.63	36.65	92.28

CLASSIFICATIONS:

Jack (screw, air hydraulic, power-operated unit, or console type, Except hand jack or pile load test type)

Log Skidder

Pan

Paver, concrete

Plate & Frame Filter Press

Pumpcrete (unit type)

Pumpcrete, Squeezecrete, or Concrete Pumping machine (regardless of size)

Scraper

Side Boom

Straddle Carrier (Ross and similar types)

Whiphammer

Winch Truck (hoisting)

OPERATING ENGINEERS **Rates Expiration Date :**

Effective Dates:

	07/01/2022	
Rate	Fringe	Total
53.72	36.65	90.37

CLASSIFICATIONS:

Asphalt Curbing Machine

Asphalt Plant Engineer

Asphalt Spreader

Autograde Curb Trimmer & Sidewalk Shoulder Slipform (CMI & similar types)

Autograde Curecrete Machine (CMI & similar types)

Autograde Tube Finisher & Texturing Machine (CMI & similar types)

Bar Bending Machines (Power)

Batcher, Batching Plant, & Crusher [On Site]

Belt Conveyor System

Boom-Type Skimmer Machine

Bridge Deck Finisher

Bulldozer (all sizes)

Captain (Power Boats)

Car Dumper (railroad)

Compressor & Blower unit for loading/unloading of concrete, cement, fly ash, or similar type materials (used independently or truck-mounted)

Compressor (2 or 3 battery)

Concrete Breaking Machine

Concrete Cleaning/Decontamination Machine

Concrete Finishing Machine

Concrete Saw or Cutter (ride-on type)

Concrete Spreader (Hetzel, Rexomatic & similar types)

Concrete Vibrator

OPERATING ENGINEERS **Rates Expiration Date :**

Effective Dates:

07/01/2022

Rate	Fringe	Total
53.72	36.65	90.37

CLASSIFICATIONS:

Conveyors - under 125 feet

Crane Signalman

Crushing Machine

Directional Boring Machine

Ditching Machine - Small (Ditchwitch, Vermeer or similar types)

Dope Pot - Mechanical (with or without pump)

Dumpster

Elevator

Fireman

Fork Lift (Economobile, Lull & similar types)

Front End Loader (1 cu. yd. and over but less than 2 cu. yds.)

Generator (2 or 3 battery)

Giraffe Grinder

Goldhofer/Hydraulic Jacking Trailer

Grader & Motor Patrols

Grout Pump

Gunnite Machine (Excluding nozzle)

Hammer - Vibratory (in conjunction with generator)

Heavy Equipment Robotics - Operator/Technician

Hoist (roof, tugger, aerial platform hoist, house car)

Hopper

Hopper Doors (power operated)

Ladder (motorized)

OPERATING ENGINEERS **Rates Expiration Date :**

Effective Dates:

	07/01/2022	
Rate	Fringe	Total
53.72	36.65	90.37

CLASSIFICATIONS:

Laddervator

Locomotive (Dinky-type)

Maintenance Utility Man

Master Environmental Maintenance Technician

Mechanic

Mixer (Except paving mixers)

Pavement Breaker (truck-mounted or small self-propelled ride-on type)

Pavement Breaker - maintenance of compressor or hydraulic unit

Pipe Bending Machine (power)

Pitch Pump

Plaster Pump (regardless of size)

Post Hole Digger (post pounder, auger)

Rod Bending Machines

Roller (black top)

Scale (power)

Seamen Pulverizing Mixer

Shoulder Widener

Silo

Skimmmer Machine (boom type)

Steel Cutting Machine (service & maintenance)

Tamrock Drill

Tractor

Transfer Machines

OPERATING ENGINEERS **Rates Expiration Date :**

Effective Dates:

07/01/2022

Rate	Fringe	Total
53.72	36.65	90.37

CLASSIFICATIONS:

Tug Captains

Tug Master (Power Boats)

Ultra High Pressure Waterjet Cutting Tool System - Operator/Maintenance Technician

Vacuum Blasting Machine - Operator/Maintenance Technician

Vibrating Plant (used with unloading)

Welder & Repair Mechanic

Effective Dates:

07/01/2022

Rate	Fringe	Total
50.38	36.65	87.03

CLASSIFICATIONS:

Assistant Engineer/Oiler

Driller's Helper

Field Engineer - Transit man or Instrument man

Maintenance Apprentice (Deckhand)

Maintenance Apprentice (Oiler)

Mechanic's Helper

Off Road Back Dump

Tire Repair & Maintenance

Effective Dates:

07/01/2022

Rate	Fringe	Total
47.80	36.65	84.45

CLASSIFICATIONS:

Field Engineer - Rodman or Chainman

NEW JERSEY DEPARTMENT OF LABOR AND WORKFORCE DEVELOPMENT
PREVAILING WAGE RATE DETERMINATION

OPERATING ENGINEERS **Rates Expiration Date :**

Effective Dates:

	07/01/2022	
Rate	Fringe	Total
57.96	36.65	94.61

CLASSIFICATIONS:

Lead Engineer, Foreman Engineer, Safety Engineer (minimum)

OPERATING ENGINEERS **Rates Expiration Date :**

Effective Dates:

	07/01/2022	
Rate	Fringe	Total
57.22	36.65	93.87

CLASSIFICATIONS:

Autograde Pavement Profiler (CMI & similar types)

Autograde Pavement Profiler - Recycle Type (CMI & similar types)

Autograde Placer/Trimmer/Spreader Combination (CMI & similar types)

Autograde Slipform Paver (CMI & similar types)

Backhoe (Excavator)

Central Power Plant

Concrete Paving Machine

Cranes, Derricks, Pile Drivers (all types), under 100 tons with a boom (including jib and/or leads) under 100 ft.

Draglines

Drill, Bauer, AMI and similar types

Drillmaster, Quarrymaster

Drillmaster/Quarrymaster (down-the-hole drill), rotary drill, self-propelled hydraulic drill, self-powered drill

Elevator Grader

Field Engineer-Chief of Party

Front End Loader (5 cu. yards or larger)

Gradall

Grader, Rago

Helicoptor Co-Pilot

Helicoptor Communications Engineer

Juntann Pile Driver

Locomotive (large)

Mucking Machine

NEW JERSEY DEPARTMENT OF LABOR AND WORKFORCE DEVELOPMENT
PREVAILING WAGE RATE DETERMINATION

OPERATING ENGINEERS **Rates Expiration Date :**

Effective Dates:

	07/01/2022	
Rate	Fringe	Total
57.22	36.65	93.87

CLASSIFICATIONS:

Pavement & Concrete Breaker (Superhammer & Hoe Ram)

Pile Driver

Prentice Truck

Roadway Surface Grinder

Scooper (loader & shovel)

Shovel (Excavator)

Trackhoe (Excavator)

Tree Chopper with boom

Trenching Machine (cable plow)

Tunnel Boring Machine

Vacuum Truck

OPERATING ENGINEERS **Rates Expiration Date :**

Effective Dates:

	07/01/2022	
Rate	Fringe	Total
52.09	36.65	88.74

CLASSIFICATIONS:

Chipper

Compressor (single)

Concrete Spreader (small type)

Conveyor Loader (Except elevator graders)

Engines, Large Diesel (1620 HP) & Staging Pump

Farm Tractor

Fertilizing Equipment (operation & maintenance)

Fine Grade Machine (small type)

Form Line Grader (small type)

Front End Loader (under 1 cubic yard)

Generator (single)

Grease, Gas, Fuel, & Oil Supply Trucks

Heaters (Nelson or other type)

Lights - portable generating light plant

Mixer, Concrete (small)

Mulching Equipment (operation & maintenance)

Power Broom or Sweeper

Pump (diesel engine & hydraulic - regardless of power)

Pump (larger than 2 inch suction, including submersible pumps)

Road Finishing Machine (small type)

Roller - grade, fill, or stone base

Seeding Equipment (operation & maintenance)

Sprinkler & Water Pump Trucks

OPERATING ENGINEERS **Rates Expiration Date :**

Effective Dates:

07/01/2022

Rate	Fringe	Total
52.09	36.65	88.74

CLASSIFICATIONS:

Steam Generator or Boiler

Stone Spreader

Tamping Machine (vibrating ride-on type)

Temporary Heating Plant (Nelson or other type, including proprane, natural gas, and flow-type units)

Water or Sprinkler Truck

Welding Machine (gas, diesel, or electric convertor, of any type)

Welding System - Multiple (rectifier transformer type)

Wellpoint Systems (including installation by bull gang and maintenance)

Effective Dates:

07/01/2022

Rate	Fringe	Total
59.04	36.65	95.69

CLASSIFICATIONS:

Helicoptor Pilot/Engineer

Effective Dates:

07/01/2022

Rate	Fringe	Total
63.72	36.65	100.37

CLASSIFICATIONS:

Cranes, Derricks, Pile Driver (all types), 100 tons and over and TOWER CRANE with boom (including jib and/or leads) 140 ft. and over

Effective Dates:

07/01/2022

Rate	Fringe	Total
62.72	36.65	99.37

CLASSIFICATIONS:

Cranes, Derricks, Pile Driver (all types), 100 tons and over and TOWER CRANE with boom (including jib and/or leads) from 100 ft. to 139 ft.

OPERATING ENGINEERS **Rates Expiration Date :**

Effective Dates:

07/01/2022

Rate	Fringe	Total
59.22	36.65	95.87

CLASSIFICATIONS:

Cranes, Derricks, Pile Driver (all types) , under 100 tons with a boom (including jib and/or leads) 140 ft. and over

Effective Dates:

07/01/2022

Rate	Fringe	Total
61.72	36.65	98.37

CLASSIFICATIONS:

Cranes, Derricks, Pile Driver (all types), 100 tons and over and TOWER CRANE with a boom (including jib and/or leads) under 100 ft.

Effective Dates:

07/01/2022

Rate	Fringe	Total
58.22	36.65	94.87

CLASSIFICATIONS:

Cranes, Derricks, Pile Driver (all types), under 100 tons with a boom (including jib and/or leads) from 100 ft. to 139 ft.

STRUCTURAL STEEL ERECTION **Rates Expiration Date :**

{For apprentice rates refer to "Operating Engineers" apprentice rates in any county rate package}

The regular workday consists of 8 hours, Monday to Friday, between 6:00 AM and 5:30 PM.

SHIFT DIFFERENTIALS:
- Shift work must be established for 5 consecutive workdays.
- Any work started outside of the allowed start time, 6:00 AM to 9:00 AM, except for * tidal work, shall be considered an irregular shift and paid at straight time, plus 15% for the first eight hours, inclusive of benefits.
- * FOR TIDAL WORK- a contractor can start their job according to tide schedules (tide schedules are the various high and low tides related to this work), providing the eight hour shift is completed between the hours of 5:00 AM and 6:30 PM.
- All time worked in excess of an established shift (an established shift is a shift that is determined at the time of the bid) shall be paid at the applicable overtime rate. When a portion of an established shift works into Saturday, Sunday or a holiday, that time worked shall be paid at the established shift rate.
- When working with other trades who receive a higher irregular shift differential, these employees shall also receive the higher differential rate.

OVERTIME:
- Hours in excess of 8 per day, or outside of the regular workday, Monday through Friday, that are not shift work, and all hours on Saturday shall be paid at time and one-half the regular rate, inclusive of benefits. All hours on Sunday and holidays shall be paid at double the regular rate, inclusive of benefits.
- Four 10-hour days may be worked, Monday through Thursday, at straight time, with all hours on Friday paid at time and one-half the regular rate, inclusive of benefits.

RECOGNIZED HOLIDAYS: New Year's Day, Presidents' Day, Memorial Day, July 4th, Labor Day, Presidential Election Day, Veterans Day, Thanksgiving Day, Christmas Day. Sunday holidays observed the following Monday. When all trades on a particular job site agree, the day after Thanksgiving may be substituted for Veterans Day.

For projects bid after April 1, 2020, on hazardous waste removal work of any kind, including a state or federally designated site, where the operating engineer is required to wear level A, B, or C personal protection, the operating engineer shall receive an hourly wage rate of his regular hourly wage plus $5.00 per hour.
- An operating engineer working at a hazardous waste removal project or site at a task requiring hazardous waste related certification, but who is not working in a zone requiring level A, B, or C personal protection, shall receive an hourly wage rate of his regular rate plus $1.00 per hour.

Effective Dates:

07/01/2022

Rate	Fringe	Total
60.85	36.65	97.50

CLASSIFICATIONS:

Helicopter Co-Pilot & Communications Engineer

NEW JERSEY DEPARTMENT OF LABOR AND WORKFORCE DEVELOPMENT
PREVAILING WAGE RATE DETERMINATION

STRUCTURAL STEEL ERECTION **Rates Expiration Date :**

Effective Dates:

07/01/2022

Rate	Fringe	Total
56.79	36.65	93.44

CLASSIFICATIONS:

A-Frame

Cherry Picker -10 tons or less (Over 10 tons use crane rate)

Hoist (all types Except Chicago-boom)

Jack (screw, air hydraulic, power-operated unit or console type, Except hand jack or pile load test type)

Side Boom

Straddle Carrier

STRUCTURAL STEEL ERECTION **Rates Expiration Date :**

Effective Dates:

07/01/2022

Rate	Fringe	Total
54.13	36.65	90.78

CLASSIFICATIONS:

Aerial Platform Used On Hoists

Apprentice Engineer/Oiler with Compressor or Welding Machine

Captain (Power Boats)

Compressor (2 or 3 in battery)

Concrete Cleaning/Decontamination Machine Operator

Conveyor or Tugger Hoist

Directional Boring Machine

Elevator or House Car

Fireman

Forklift

Generator (2 or 3)

Heavy Equipment Robotics, Operator/Technician

Maintenance Utility Man

Master Environmental Maintenance Technician

Tug Master (Power Boats)

Ultra High Pressure Waterjet Cutting Tool System Operator/Maintenance Technician

Vacuum Blasting Machine Operator/Maintenance Technician

Welding Machines, Gas or Electric Converters on any type-2 or 3 in battery including diesels

STRUCTURAL STEEL ERECTION **Rates Expiration Date :**

Effective Dates:

07/01/2022

Rate	Fringe	Total
52.60	36.65	89.25

CLASSIFICATIONS:

Compressor (Single)

Generators

Welding Machines, Gas, Diesel, Or Electric Converters of any type-single

Welding System, Multiple (Rectifier Transformer Type)

Effective Dates:

07/01/2022

Rate	Fringe	Total
50.84	36.65	87.49

CLASSIFICATIONS:

Assistant Engineer/Oiler

Drillers Helper

Field Engineer - Transit/Instrument Man

Maintenance Apprentice (Deckhand)

Maintenance Apprentice (Oiler)

Off Road Back Dump

Effective Dates:

07/01/2022

Rate	Fringe	Total
58.41	36.65	95.06

CLASSIFICATIONS:

Lead Engineer, Foreman Engineer, Safety Engineer (Minimum)

Effective Dates:

07/01/2022

Rate	Fringe	Total
47.80	36.65	84.45

CLASSIFICATIONS:

Field Engineer - Rodman or Chainman

STRUCTURAL STEEL ERECTION **Rates Expiration Date :**

Effective Dates:

07/01/2022

Rate	Fringe	Total
57.55	36.65	94.20

CLASSIFICATIONS:

Field Engineer-Chief of Party

Vacuum Truck

Effective Dates:

07/01/2022

Rate	Fringe	Total
65.74	36.65	102.39

CLASSIFICATIONS:

Cranes (all cranes, land or floating with booms, including jib, 140 ft. and over, above ground). Derricks (all derricks, land, floating or Chicago Boom type with booms including jib, 140 ft. and over, above ground), and Pile Drivers (all types) 100 tons and over and Tower Cranes.

Effective Dates:

07/01/2022

Rate	Fringe	Total
64.08	36.65	100.73

CLASSIFICATIONS:

Cranes (all cranes, land or floating with booms including jib, less than 140 ft. abovr ground), Derricks (all derricks. land, floating or Chicago Boom type with booms including jib, less than 140 ft. above ground), Pile Drivers (all types), 100 tons and over and Tower Crane.

Effective Dates:

07/01/2022

Rate	Fringe	Total
61.24	36.65	97.89

CLASSIFICATIONS:

Cranes (all cranes, land or floating with booms including jib, 140 ft. and over, above ground), Derricks (all derricks, land, floating or Chicago Boom type with booms including jib, 140 ft. and over, above ground), Pile Drivers (all types), under 100 tons.

Effective Dates:

07/01/2022

Rate	Fringe	Total
59.58	36.65	96.23

CLASSIFICATIONS:

Cranes (all cranes, land or floating with booms including jib, less than 140 ft. above ground), Derricks (all derricks, land, floating or Chicago Boom type with booms including jib, less than 140 ft. above ground), Pile Drivers (all types), under 100 tons.

NEW JERSEY DEPARTMENT OF LABOR AND WORKFORCE DEVELOPMENT
PREVAILING WAGE RATE DETERMINATION

STRUCTURAL STEEL ERECTION **Rates Expiration Date :**

Effective Dates:

07/01/2022

Rate	Fringe	Total
61.24	36.65	97.89

CLASSIFICATIONS:

Helicopter Pilot & Engineer

TEST BORING PRELIMINARY TO CONSTRUCTION-SOUTH/WEST **Rates Expiration Date :**

THESE RATES APPLY IN THE FOLLOWING COUNTIES ONLY:
Atlantic, Burlington, Camden, Cape May, Cumberland, Gloucester, Hunterdon, Mercer, Monmouth, Ocean, Salem, Sussex, Warren

The regular workday consists of 8 hours, Monday to Friday, between 6:00 AM and 5:30 PM.

SHIFT DIFFERENTIALS:
- Shift work must be established for 5 consecutive workdays.
- Any work started outside of the allowed start time, 6:00 AM to 9:00 AM, except for * tidal work, shall be considered an irregular shift and paid at straight time, plus 15% for the first eight hours, inclusive of benefits.
- * FOR TIDAL WORK- a contractor can start their job according to tide schedules (tide schedules are the various high and low tides related to this work), providing the eight hour shift is completed between the hours of 5:00 AM and 6:30 PM.
- All time worked in excess of an established shift (an established shift is a shift that is determined at the time of the bid) shall be paid at the applicable overtime rate. When a portion of an established shift works into Saturday, Sunday or a holiday, that time worked shall be paid at the established shift rate.
- When working with other trades who receive a higher irregular shift differential, these employees shall also receive the higher differential rate.

OVERTIME:
- Hours in excess of 8 per day, or outside of the regular workday, Monday through Friday, that are not shift work, and all hours on Saturday shall be paid at time and one-half the regular rate, inclusive of benefits. All hours on Sunday and holidays shall be paid at double the regular rate, inclusive of benefits.
- Four 10-hour days may be worked, Monday through Thursday, at straight time, with all hours on Friday paid at time and one-half the regular rate, inclusive of benefits.

RECOGNIZED HOLIDAYS: New Year's Day, Presidents' Day, Memorial Day, July 4th, Labor Day, Presidential Election Day, Veterans Day, Thanksgiving Day, Christmas Day. Sunday holidays observed the following Monday. When all trades on a particular job site agree, the day after Thanksgiving may be substituted for Veterans Day.

For projects bid after April 1, 2020, on hazardous waste removal work of any kind, including a state or federally designated site, where the operating engineer is required to wear level A, B, or C personal protection, the operating engineer shall receive an hourly wage rate of his regular hourly wage plus $5.00 per hour.
- An operating engineer working at a hazardous waste removal project or site at a task requiring hazardous waste related certification, but who is not working in a zone requiring level A, B, or C personal protection, shall receive an hourly wage rate of his regular rate plus $1.00 per hour.

Effective Dates:

07/01/2022

Rate	Fringe	Total
57.22	36.65	93.87

CLASSIFICATIONS:

Driller

Effective Dates:

07/01/2022

Rate	Fringe	Total
50.38	36.65	87.03

CLASSIFICATIONS:

Driller's Helper

FREE AIR TUNNEL JOBS **Rates Expiration Date :**

{For apprentice rates refer to "Heavy & General" apprentice rates in any county rate package}

The regular workday consists of 8 hours, starting at 7:00 AM or 8:00 AM.

SHIFT DIFFERENTIALS:
- Shifts must start at 3:00 PM, 4:00 PM, 12:00 AM, or 1:00 AM, to be considered shift work, except when the project owner mandates special hours of work in the job specifications, in which case those hours may be considered shift work.
- When such hours are mandated by the project owner, a shift that begins before midnight on Friday and ends on Saturday morning, or that begins at or after 8:00 PM on Sunday and ends on Monday morning may be paid at the shift differential rate.
- Shifts shall receive an additional $3.00 per hour.

OVERTIME:
- Hours in excess of 8 per day, Monday through Friday, or outside of the regular workday that are not shift work, and all hours on Saturdays, shall be paid at time and one-half the hourly rate. All hours on Sundays and holidays shall be paid at double the hourly rate.
- Four 10-hour days may be worked, Monday through Thursday, at straight time, with Friday used as a make-up day for a day lost to inclement weather. If Friday is not a make-up day, all hours on Friday shall be paid at time and one-half the hourly rate.

RECOGNIZED HOLIDAYS: New Year's Day, Presidents' Day, Memorial Day, July 4th, Labor Day, Presidential Election Day, Veterans' Day, Thanksgiving Day, Christmas Day. Sunday holidays observed the following Monday. Veterans Day may be substituted for the day after Thanksgiving. However, in the trading of Veterans Day for the day after Thanksgiving, if overtime is worked on Veterans Day, it shall be paid at double the hourly rate.

Hazardous Waste Work:
-where Level A, B, or C protection is required: + $3.00/hr
-other Hazardous Waste site: + $1.00/hr

.

Effective Dates:

	03/01/2022		03/01/2023
Rate	Fringe	Total	Total
48.65	34.88	83.53	86.03

CLASSIFICATIONS:

Walking Boss & Superintendent

Effective Dates:

	03/01/2022		03/01/2023
Rate	Fringe	Total	Total
48.35	34.88	83.23	85.73

CLASSIFICATIONS:

Heading Foreman, Shaft Foreman, Rod Foreman, Electrician Foreman, Rigging Foreman

FREE AIR TUNNEL JOBS **Rates Expiration Date :**

Effective Dates:

03/01/2022			03/01/2023
Rate	Fringe	Total	Total
47.85	34.88	82.73	85.23

CLASSIFICATIONS:

Iron Foreman, Caulking Foreman, Form Foreman, Cement Finishing Foreman, Concrete Foreman, Track Foreman, Cleanup Foreman, Grout Foreman

Effective Dates:

03/01/2022			03/01/2023
Rate	Fringe	Total	Total
50.35	34.88	85.23	87.73

CLASSIFICATIONS:

Blaster

Effective Dates:

03/01/2022			03/01/2023
Rate	Fringe	Total	Total
47.30	34.88	82.18	84.68

CLASSIFICATIONS:

Top Labor Foreman

Effective Dates:

03/01/2022			03/01/2023
Rate	Fringe	Total	Total
46.95	34.88	81.83	84.33

CLASSIFICATIONS:

Skilled Men (including Caulker, Powder Carrier, all other skilled men)

Skilled Men (including Miner, Drill Runner, Iron Man, Conveyor Man, Manitenance Man, Safety Miner, Rigger, Block Layer, Cement Finisher, Tod Man)

Effective Dates:

03/01/2022			03/01/2023
Rate	Fringe	Total	Total
46.80	34.88	81.68	84.18

CLASSIFICATIONS:

Semi-Skilled Men (including Bell or Signal Man Top or Bottom, Form Worker & Mover, Concrete Worker, Shaft Man, Tunnel Laborer, Caulker's Helper, all other semi-skilled)

Semi-Skilled Men (including Miner's Helper, Chuck Tender, Track Man, Nipper, Brake Man, Derail Man, Cable Man, Hose Man, Gravel Man, Form Man)

NEW JERSEY DEPARTMENT OF LABOR AND WORKFORCE DEVELOPMENT
PREVAILING WAGE RATE DETERMINATION

FREE AIR TUNNEL JOBS **Rates Expiration Date :**

Effective Dates:

	03/01/2022		03/01/2023
Rate	Fringe	Total	Total
46.40	34.88	81.28	83.78

CLASSIFICATIONS:

All Others (including Powder Watchman, Change House Attendant, Top Laborer)

DRILL FOR GROUND WATER SUPPLY **Rates Expiration Date :**

The well driller and/or helper may perform all work relative to the construction, finishing, and servicing of wells, pumps and borings for ground water supply. The present methods of well drilling entailing as they do, many diverse job operations calling for drilling, pump discharge, piping, and the operation of various types of related power equipment, shall all be within the job duties and functions of the well driller and/or helper. In the event that an extension of work should occur beyond water well drilling functions, into the field of general construction work, such extension of work would come under the appropriate rates listed elsewhere in this wage determination.

- For Work Hours, Shift Differentials, Overtime Rates, and Recognized Holidays see the "Operating Engineers" section of this wage determination.

Effective Dates:

07/01/2022

Rate	Fringe	Total
55.97	36.65	92.62

CLASSIFICATIONS:

Driller

Effective Dates:

07/01/2022

Rate	Fringe	Total
49.13	36.65	85.78

CLASSIFICATIONS:

Driller's Helper

OPERATING ENGINEERS MARINE-DREDGING **Rates Expiration Date :**

NOTE: These wage rates only apply to dredging and other marine construction activities occurring in navigable waters and their tributaries.
Boat crews carrying explosive material (dynamite, pourfex, and other similar materials) shall be paid at 120% of the hourly wage rate for hours engaged in handling of said materials. Employees required to possess a Hazardous Material Certification as a condition of employment shall be compensated at 120% of the hourly wage rate.
OVERTIME:
Hours in excess of 40 per week, and all hours on Saturdays and Sundays, shall be paid at time and one-half the hourly rate. All hours on holidays shall be paid at double the hourly rate.
RECOGNIZED HOLIDAYS: New Year's Day, Martin Luther King Day, Good Friday, Memorial Day, July 4th, Labor Day, Veterans Day, Thanksgiving Day, Christmas Day. Sunday holidays observed the following Monday.

Effective Dates:

10/01/2022			10/01/2023
Rate	Fringe	Total	Total
43.94	14.54	58.48	60.48

CLASSIFICATIONS:

Lead Dredgerman, Operator, Leverman

Licensed Tug Operator (over 1000 HP)

Effective Dates:

10/01/2022			10/01/2023
Rate	Fringe	Total	Total
38.00	14.18	52.18	53.93

CLASSIFICATIONS:

Derrick Operator, Spider/Spill Barge Operator

Engineer, Electrician, Chief Welder, Chief Mate

Fill Placer, Operator II

Licensed Boat Operator

Maintenance Engineer

Effective Dates:

10/01/2022			10/01/2023
Rate	Fringe	Total	Total
35.77	14.05	49.82	51.47

CLASSIFICATIONS:

Certified Welder

OPERATING ENGINEERS MARINE-DREDGING **Rates Expiration Date :**

Effective Dates:

10/01/2022			10/01/2023
Rate	Fringe	Total	Total
34.79	13.74	48.53	50.14

CLASSIFICATIONS:

Mate, Drag Barge Operator, Steward, Assistant Fill Placer

Welder

Effective Dates:

10/01/2022			10/01/2023
Rate	Fringe	Total	Total
33.67	13.67	47.34	48.91

CLASSIFICATIONS:

Boat Operator

Effective Dates:

10/01/2022			10/01/2023
Rate	Fringe	Total	Total
27.97	13.33	41.30	42.63

CLASSIFICATIONS:

Shoreman, Deckhand, Rodman, Scowman

Effective Dates:

10/01/2022			10/01/2023
Rate	Fringe	Total	Total
39.16	14.25	53.41	55.20

CLASSIFICATIONS:

Crane Operator

MICROSURFACING/SLURRY SEAL **Rates Expiration Date :**

THESE RATES APPLY IN THE FOLLOWING COUNTIES ONLY:
Atlantic, Burlington, Camden, Cape May, Cumberland, Gloucester, Mercer, Ocean, Salem
IN ALL OTHER COUNTIES use the Heavy and General Laborers - North "Slurry Seal Laborer" rates.

SHIFT DIFFERENTIALS:
Any shift starting at 3:30 PM or later shall receive an additional $0.35/hr

OVERTIME:
Hours in excess of 8 per day or 40 per week shall be paid at time and one-half the hourly rate. All hours on holidays shall be paid at double the hourly rate.

RECOGNIZED HOLIDAYS: New Year's Day, Washington's Birthday, Memorial Day, July 4th, Labor Day, Presidential Election Day, Veterans' Day, Thanksgiving Day, Christmas Day.

Effective Dates:

03/01/2017

Rate	Fringe	Total
36.50	21.27	57.77

CLASSIFICATIONS:

Foreman

Effective Dates:

03/01/2017

Rate	Fringe	Total
33.80	21.27	55.07

CLASSIFICATIONS:

Box man

Effective Dates:

03/01/2017

Rate	Fringe	Total
31.75	21.27	53.02

CLASSIFICATIONS:

Microsurface/Slurry Preparation

Effective Dates:

03/01/2017

Rate	Fringe	Total
31.75	21.27	53.02

CLASSIFICATIONS:

Squeegee man

NEW JERSEY DEPARTMENT OF LABOR AND WORKFORCE DEVELOPMENT
PREVAILING WAGE RATE DETERMINATION

MICROSURFACING/SLURRY SEAL **Rates Expiration Date :**

Effective Dates:

03/01/2017

Rate	Fringe	Total
30.30	21.27	51.57

CLASSIFICATIONS:

Cleaner, Taper

ASPHALT LABORERS - SOUTH **Rates Expiration Date :**

"THESE RATES APPLY IN THE FOLLOWING COUNTIES ONLY: Atlantic, Burlington, Camden, Cape May, Cumberland, Gloucester, Mercer, Ocean, Salem
{For apprentice rates refer to "Laborer - Heavy & General" apprentice rates in any county rate package}
The regular workday consists of 8 hours, starting at 7:00 AM or 8:00 AM.
SHIFT DIFFERENTIALS:
- Shifts must start at 3:00 PM, 4:00 PM, 12:00 AM, or 1:00 AM, to be considered shift work, except when the project owner mandates special hours of work in the job specifications, in which case those hours may be considered shift work.
- When such hours are mandated by the project owner, a shift that begins before midnight on Friday and ends on Saturday morning, or that begins at or after 8:00 PM on Sunday and ends on Monday morning may be paid at the shift differential rate.
- Shifts shall receive an additional $3.00 per hour.
OVERTIME:
- Hours in excess of 8 per day, Monday through Friday, or outside of the regular workday that are not shift work, and all hours on Saturdays, shall be paid at time and one-half the hourly rate. All hours on Sundays and holidays shall be paid at double the hourly rate.
- Four 10-hour days may be worked, Monday through Thursday, at straight time, with Friday used as a make-up day for a day lost to inclement weather. If Friday is not a make-up day, all hours on Friday shall be paid at time and one-half the hourly rate.
RECOGNIZED HOLIDAYS: New Year's Day, Presidents' Day, Memorial Day, July 4th, Labor Day, Presidential Election Day, Veterans' Day, Thanksgiving Day, Christmas Day. Sunday holidays observed the following Monday. Veterans Day may be substituted for the day after Thanksgiving. However, in the trading of Veterans Day for the day after Thanksgiving, if overtime is worked on Veterans Day, it shall be paid at double the hourly rate.
Hazardous Waste Work:
-where Level A, B, or C protection is required: + $5.00/hr
-other Hazardous Waste site: + $1.00/hr
FOR TIDE WORK (pertains to tidal water): A contractor can start their job according to tide schedules (tide schedules are the various high and low tides related to this work) providing the eight (8) hour shift is completed between the hours of 5:00 AM and 6:30 PM.

Effective Dates:

	03/01/2022		03/01/2023
Rate	Fringe	Total	Total
49.15	34.88	84.03	87.53

CLASSIFICATIONS:

Paving Foreman

Effective Dates:

	03/01/2022		03/01/2023
Rate	Fringe	Total	Total
46.70	34.88	81.58	84.08

CLASSIFICATIONS:

Head Raker

Effective Dates:

	03/01/2022		03/01/2023
Rate	Fringe	Total	Total
46.85	34.88	81.73	84.23

CLASSIFICATIONS:

Screedman

ASPHALT LABORERS - SOUTH **Rates Expiration Date :**

Effective Dates:

03/01/2022			03/01/2023
Rate	Fringe	Total	Total
46.30	34.88	81.18	83.68

CLASSIFICATIONS:

Tampers, Smoothers, Kettlemen,
Painters, Shovelers, Roller Boys

Effective Dates:

03/01/2022			03/01/2023
Rate	Fringe	Total	Total
46.40	34.88	81.28	83.78

CLASSIFICATIONS:

Milling Controller

Effective Dates:

03/01/2022			03/01/2023
Rate	Fringe	Total	Total
46.60	34.88	81.48	83.98

CLASSIFICATIONS:

Traffic Control Coordinator

Effective Dates:

03/01/2022			03/01/2023
Rate	Fringe	Total	Total
46.55	34.88	81.43	83.93

CLASSIFICATIONS:

Raker, Luteman

TEST BORING PRELIMINARY TO CONSTRUCTION-NORTH **Rates Expiration Date :**

THESE RATES APPLY IN THE FOLLOWING COUNTIES ONLY:
Bergen, Essex, Hudson, Middlesex, Morris, Passaic, Somerset, Union

SHIFT DIFFERENTIAL:
Employees on a shift other than between the hours of 8:00 AM and 5:00 PM shall receive an additional $2.00 per hour.

OVERTIME:
Hours in excess of 8 per day, Monday through Friday, and all hours on Saturday shall be paid at time and one-half the regular rate. All hours on Sundays and holidays shall be paid at double the regular rate.

RECOGNIZED HOLIDAYS: New Year's Day, Memorial Day, July 4th, Labor Day, Thanksgiving Day, and Christmas Day. Sunday holidays observed the following Monday.

Hazardous Waste Pay (for Levels A, B, and C): an additional 15% of the hourly rate, per hour.

A newly hired Helper with no experience in the industry shall be paid as follows:
1st year on the job - 70% of Helper wage rate
2nd year on the job - 80% of Helper wage rate
3rd year on the job - 90% of Helper wage rate
All helpers receive full fringe benefit rate.

Effective Dates:

10/18/2022

Rate	Fringe	Total
0.00	0.00	65.92

CLASSIFICATIONS:

Helper (4th year helper)

Effective Dates:

10/18/2022

Rate	Fringe	Total
0.00	0.00	75.24

CLASSIFICATIONS:

Driller

Effective Dates:

10/18/2022

Rate	Fringe	Total
0.00	0.00	81.28

CLASSIFICATIONS:

Foreman

HEAVY & GENERAL LABORERS - NORTH **Rates Expiration Date :**

THESE RATES APPLY IN THE FOLLOWING COUNTIES ONLY:
Bergen, Essex, Hudson, Hunterdon, Middlesex, Monmouth, Morris, Passaic, Somerset, Sussex, Union, Warren

{For apprentice rates refer to "Laborer - Heavy & General" apprentice rates in any county rate package}

The regular workday consists of 8 hours, starting at 7:00 AM or 8:00 AM.

SHIFT DIFFERENTIALS:
- Shifts must start at 3:00 PM, 4:00 PM, 12:00 AM, or 1:00 AM, to be considered shift work, except when the project owner mandates special hours of work in the job specifications, in which case those hours may be considered shift work.
- When such hours are mandated by the project owner, a shift that begins before midnight on Friday and ends on Saturday morning, or that begins at or after 8:00 PM on Sunday and ends on Monday morning may be paid at the shift differential rate.
- Shifts shall receive an additional $3.00 per hour.

FOR TIDE WORK (pertains to tidal water): A contractor can start their job according to tide schedules (tide schedules are the various high and low tides related to this work) providing the eight (8) hour shift is completed between the hours of 5:00 AM and 6:30 PM.

OVERTIME:
- Hours in excess of 8 per day, Monday through Friday, or outside of the regular workday that are not shift work, and all hours on Saturdays, shall be paid at time and one-half the hourly rate. All hours on Sundays and holidays shall be paid at double the hourly rate.
- Four 10-hour days may be worked, Monday through Thursday, at straight time, with Friday used as a make-up day for a day lost to inclement weather. If Friday is not a make-up day, all hours on Friday shall be paid at time and one-half the hourly rate.

RECOGNIZED HOLIDAYS: New Year's Day, Presidents' Day, Memorial Day, July 4th, Labor Day, Presidential Election Day, Veterans' Day, Thanksgiving Day, Christmas Day. Sunday holidays observed the following Monday. Veterans Day may be substituted for the day after Thanksgiving. However, in the trading of Veterans Day for the day after Thanksgiving, if overtime is worked on Veterans Day, it shall be paid at double the hourly rate.

Hazardous Waste Work:
-where Level A, B, or C protection is required: + $5.00/hr
-other Hazardous Waste site: + $1.00/hr

Effective Dates:

	03/01/2022		03/01/2023
Rate	Fringe	Total	Total
45.90	34.88	80.78	83.28

CLASSIFICATIONS:

"D" Rate:
basic, landscape, asphalt, slurry seal, or railroad track laborer; utility meter installer; flagman; salamander tender; pitman; dumpman; rakers or tampers on cold patch work; wrappers or coaters of pipe; waterproofer; timberman; wagon drill or drill master helper; powder carrier; magazine tender; signal man; power buggy operator; tree cutter; operator of basic power tools

Effective Dates:

	03/01/2022		03/01/2023
Rate	Fringe	Total	Total
46.60	34.88	81.48	83.98

CLASSIFICATIONS:

"C" Rate:
pipe layer; laser man; conduit or duct line layer; operator of jack hammer, chipping hammer, pavement breaker, concrete cutter, asphalt cutter, sheet hammer, or walk-behind saw cutter; sandblaster; acetylene cutting or burning; wagon drill, directional drill, or hydraulic drill operator; drill master; core driller; traffic control coordinator; asphalt raker or lute man

HEAVY & GENERAL LABORERS - NORTH **Rates Expiration Date :**

Effective Dates:

03/01/2022			03/01/2023
Rate	Fringe	Total	Total
46.85	34.88	81.73	84.23

CLASSIFICATIONS:

"B" Rate:
concrete finisher; setter of brick or stone pavers; stone cutter; form setter; manhole, catch basin, or inlet builder; asphalt screedman; rammer; hardscaping; gunite nozzle man

Effective Dates:

03/01/2022			03/01/2023
Rate	Fringe	Total	Total
50.40	34.88	85.28	87.78

CLASSIFICATIONS:

"A" Rate:
blaster

Effective Dates:

03/01/2022			03/01/2023
Rate	Fringe	Total	Total
49.15	34.88	84.03	87.53

CLASSIFICATIONS:

"FOREMAN" Rate:
labor foreman, asphalt foreman, drill foreman, pipe foreman, grade foreman, finisher foreman, concrete foreman

Effective Dates:

03/01/2022			03/01/2023
Rate	Fringe	Total	Total
50.15	34.88	85.03	88.53

CLASSIFICATIONS:

"GENERAL FOREMAN" Rate

HEAVY & GENERAL LABORERS - SOUTH **Rates Expiration Date :**

THESE RATES APPLY IN THE FOLLOWING COUNTIES ONLY:
Atlantic, Burlington, Camden, Cape May, Cumberland, Gloucester, Mercer, Ocean, Salem

{For apprentice rates refer to "Laborer - Heavy & General" apprentice rates in any county rate package}

The regular workday consists of 8 hours, starting at 7:00 AM or 8:00 AM.

SHIFT DIFFERENTIALS:
- Shifts must start at 3:00 PM, 4:00 PM, 12:00 AM, or 1:00 AM, to be considered shift work, except when the project owner mandates special hours of work in the job specifications, in which case those hours may be considered shift work.
- When such hours are mandated by the project owner, a shift that begins before midnight on Friday and ends on Saturday morning, or that begins at or after 8:00 PM on Sunday and ends on Monday morning may be paid at the shift differential rate.
- Shifts shall receive an additional $3.00 per hour.

FOR TIDE WORK (pertains to tidal water): A contractor can start their job according to tide schedules (tide schedules are the various high and low tides related to this work) providing the eight (8) hour shift is completed between the hours of 5:00 AM and 6:30 PM.

OVERTIME:
- Hours in excess of 8 per day, Monday through Friday, or outside of the regular workday that are not shift work, and all hours on Saturdays, shall be paid at time and one-half the hourly rate. All hours on Sundays and holidays shall be paid at double the hourly rate.
- Four 10-hour days may be worked, Monday through Thursday, at straight time, with Friday used as a make-up day for a day lost to inclement weather. If Friday is not a make-up day, all hours on Friday shall be paid at time and one-half the hourly rate.

RECOGNIZED HOLIDAYS: New Year's Day, Presidents' Day, Memorial Day, July 4th, Labor Day, Presidential Election Day, Veterans' Day, Thanksgiving Day, Christmas Day. Sunday holidays observed the following Monday. Veterans Day may be substituted for the day after Thanksgiving. However, in the trading of Veterans Day for the day after Thanksgiving, if overtime is worked on Veterans Day, it shall be paid at double the hourly rate.

Hazardous Waste Work:
-where Level A, B, or C protection is required: + $5.00/hr
-other Hazardous Waste site: + $1.00/hr

Effective Dates:

	03/01/2022		03/01/2023
Rate	Fringe	Total	Total
45.90	34.88	80.78	83.28

CLASSIFICATIONS:

basic, landscape, or railroad track laborer; utility meter installer; flagman; salamander tender; pitman; dumpman; rakers or tampers on cold patch work; wrappers or coaters of pipe; waterproofers; tree cutter, timberman

Effective Dates:

	03/01/2022		03/01/2023
Rate	Fringe	Total	Total
45.90	34.88	80.78	83.28

CLASSIFICATIONS:

wagon drill or drill master helper; powder carrier; magazine tender; signal man

HEAVY & GENERAL LABORERS - SOUTH **Rates Expiration Date :**

Effective Dates:

03/01/2022			03/01/2023
Rate	Fringe	Total	Total
46.60	34.88	81.48	83.98

CLASSIFICATIONS:

pipe layer; laser man; conduit or duct line layer; operator of jack hammer, chipping hammer, pavement breaker, concrete cutter, asphalt cutter, sheet hammer, or walk-behind saw cutter; sandblaster; acetylene cutting or burning

Effective Dates:

03/01/2022			03/01/2023
Rate	Fringe	Total	Total
46.60	34.88	81.48	83.98

CLASSIFICATIONS:

wagon or directional drill operator; drill master

Effective Dates:

03/01/2022			03/01/2023
Rate	Fringe	Total	Total
50.40	34.88	85.28	87.78

CLASSIFICATIONS:

blaster

Effective Dates:

03/01/2022			03/01/2023
Rate	Fringe	Total	Total
49.15	34.88	84.03	87.53

CLASSIFICATIONS:

labor foreman, drill foreman, pipe foreman, grade foreman, finisher foreman, concrete foreman

Effective Dates:

03/01/2022			03/01/2023
Rate	Fringe	Total	Total
50.15	34.88	85.03	88.53

CLASSIFICATIONS:

general foreman

HEAVY & GENERAL LABORERS - SOUTH **Rates Expiration Date :**

Effective Dates:

03/01/2022			03/01/2023
Rate	Fringe	Total	Total
46.85	34.88	81.73	84.23

CLASSIFICATIONS:

concrete finisher; setter of brick or stone pavers; stone cutter; form setter; manhole, catch basin, or inlet builder; rammer; gunite nozzle man

PIPELINE - MAINLINE TRANSMISSION **Rates Expiration Date :**

These rates apply to the following: welding on Transportation Mainline pipe lines (cross-country pipe lines, or any segments thereof, transporting coal, gas, oil, water or other transportable materials, vapors or liquids, including portions of such pipe lines within private property boundaries up to the final metering station or connection - the point where a valve, consumer connection, or town border station divides mainline transmission lines or higher pressure lateral and branch lines from lower pressure distribution systems).

PER DIEM PAYMENT:
In addition to the total wage rate paid for each craft, the following per diem (per day) amounts must also be paid - Pipeline Journeyman: $80.50; Pipeline Journeyman Welder: $140.50; and Pipeline Helper: $64.50. Note: in order to receive the per diem payment an employee must work a minimum of 8 hours in a 24 hour period.

NOTES:
- Journeymen employed as "stringer bead" welders and journeymen who are regularly employed as "hot-pass" welders shall receive $1.00 per hour more than other journeymen.
- Welders running "stringer bead" or "hot-pass" on "cutouts" or "tie-ins" on a production basis shall be paid $1.00 per hour above the journeymen rate.
- Whenever a welder helper is employed using a power buffer or power grinder immediately behind the stringer bead and/or hot-pass welders, and the pipe gang is set on a production basis, the helper shall be paid $2.00 per hour above the helper rate.
- If back welding is performed inside a pipe under either or both of the following conditions, the welder engaged in the welding will receive $3.00 per hour above the regular rate for the job only for the days on which such back welding is performed:
  - The employer elects, as a regular procedure, to back weld each line-up. This condition is not intended to apply to occasional back welding performed by the pipe gang to repair a bead, to rectify a "high-lo" condition or wall thickness, etc.
  - A welder is required to back weld a completed weld behind the firing line.
- If the welder helper is required to go inside the pipe for the purpose of brushing, buffing and grinding the weld, they shall receive a wage rate $1.00 per hour above the regular
helper rate for the days involved.
- Welders working on "hot work" shall be paid $2.00 per hour above the regular rate for each day engaged in such work. "Hot work' is defined as work on lines in service where there is the danger of fire or explosion.

The regular workday shall be 8 hours, between 8:00 AM and 4:30 PM.

OVERTIME:
Hours in excess of 8 per day, and all hours on Sundays shall be paid at time and one-half the regular rate, inclusive of benefits. All hours on holidays shall be paid at double the regular rate, inclusive of benefits.

RECOGNIZED HOLIDAYS: New Year's Day, July 4th, Labor Day, Thanksgiving Day, and Christmas Day. Sunday holidays observed the following Monday.

Effective Dates:

	06/01/2022	
Rate	Fringe	Total
55.34	34.65	89.99

CLASSIFICATIONS:

Pipeline Journeyman Welder

PIPELINE - MAINLINE TRANSMISSION **Rates Expiration Date :**

Effective Dates:

06/01/2022

Rate	Fringe	Total
55.34	34.65	89.99

CLASSIFICATIONS:

Pipeline Journeyman

Effective Dates:

06/01/2022

Rate	Fringe	Total
33.84	24.27	58.11

CLASSIFICATIONS:

Pipeline Helper

PIPELINE - GAS DISTRIBUTION **Rates Expiration Date :**

These rates apply to the following: welding on gas line distribution systems (that portion of the gas distribution system placed in streets, roads, subways, tunnels, viaducts, highways and easements which serves the users of gas).

SHIFT DIFFERENTIALS:
An "irregular" shift may start any time from 5:00 PM to 12:00 AM, Monday through Friday, and shall receive an additional 15% of the regular rate per hour, inclusive of benefits.

OVERTIME:
Hours in excess of forty per week, and all hours on Saturdays shall be paid at time and one-half the regular rate, inclusive of benefits. All hours on Sundays and holidays shall be paid at double the regular rate, inclusive of benefits.

RECOGNIZED HOLIDAYS: New Year's Day, Memorial Day, July 4th, Labor Day, Thanksgiving Day, and Christmas Day. Sunday holidays observed the following Monday.

Effective Dates:

11/02/2022

Rate	Fringe	Total
63.90	29.83	93.73

CLASSIFICATIONS:

Pipeline Journeyman Welder

Effective Dates:

11/02/2022

Rate	Fringe	Total
63.90	29.83	93.73

CLASSIFICATIONS:

Pipeline Journeyman

Effective Dates:

11/02/2022

Rate	Fringe	Total
40.53	22.15	62.68

CLASSIFICATIONS:

Pipeline Helper

ASPHALT LABORERS- NORTH **Rates Expiration Date :**

THESE RATES APPLY IN THE FOLLOWING COUNTIES ONLY:
Bergen, Essex, Hudson, Hunterdon, Middlesex, Monmouth, Morris, Passaic, Somerset, Sussex, Union, Warren
{For apprentice rates refer to "Laborer - Heavy & General" apprentice rates in any county rate package}
The regular workday consists of 8 hours, starting at 7:00 AM or 8:00 AM.
SHIFT DIFFERENTIALS:
- Shifts must start at 3:00 PM, 4:00 PM, 12:00 AM, or 1:00 AM, to be considered shift work, except when the project owner mandates special hours of work in the job specifications, in which case those hours may be considered shift work.
- When such hours are mandated by the project owner, a shift that begins before midnight on Friday and ends on Saturday morning, or that begins at or after 8:00 PM on Sunday and ends on Monday morning may be paid at the shift differential rate.
- Shifts shall receive an additional $3.00 per hour.
OVERTIME:
- Hours in excess of 8 per day, Monday through Friday, or outside of the regular workday that are not shift work, and all hours on Saturdays, shall be paid at time and one-half the hourly rate. All hours on Sundays and holidays shall be paid at double the hourly rate.
- Four 10-hour days may be worked, Monday through Thursday, at straight time, with Friday used as a make-up day for a day lost to inclement weather. If Friday is not a make-up day, all hours on Friday shall be paid at time and one-half the hourly rate.
RECOGNIZED HOLIDAYS: New Year's Day, Presidents' Day, Memorial Day, July 4th, Labor Day, Presidential Election Day, Veterans' Day, Thanksgiving Day, Christmas Day. Sunday holidays observed the following Monday. Veterans Day may be substituted for the day after Thanksgiving. However, in the trading of Veterans Day for the day after Thanksgiving, if overtime is worked on Veterans Day, it shall be paid at double the hourly rate.
Hazardous Waste Work:
-where Level A, B, or C protection is required: + $5.00/hr
-other Hazardous Waste site: + $1.00/hr
FOR TIDE WORK (pertains to tidal water): A contractor can start their job according to tide schedules (tide schedules are the various high and low tides related to this work) providing the eight (8) hour shift is completed between the hours of 5:00 AM and 6:30 PM.

Effective Dates:

	03/01/2022		03/01/2023
Rate	Fringe	Total	Total
49.15	34.88	84.03	87.53

CLASSIFICATIONS:

Asphalt Foreman

Effective Dates:

	03/01/2022		03/01/2023
Rate	Fringe	Total	Total
46.85	34.88	81.73	84.23

CLASSIFICATIONS:

Asphalt Screedman

Effective Dates:

	03/01/2022		03/01/2023
Rate	Fringe	Total	Total
46.60	34.88	81.48	83.98

CLASSIFICATIONS:

Asphalt Raker or Lute Man

TERRITORY

ENTIRE STATE

NEW JERSEY DEPARTMENT OF LABOR AND WORKFORCE DEVELOPMENT

PREVAILING WAGE RATE DETERMINATION

ASPHALT LABORERS- NORTH **Rates Expiration Date :**

Effective Dates:

	03/01/2022		**03/01/2023**
Rate	Fringe	Total	Total
45.90	34.88	80.78	83.28

CLASSIFICATIONS:

Asphalt Laborer

ELECTRICIAN- UTILITY WORK (NORTH) **Rates Expiration Date :**

Electrician-Utility Work (North)
(For apprentice rates refer to Electrician-Utility Work (North) in any county rate package).
These rates apply to work contracted for by the following utility companies:
Public Service Electric & Gas Co. of NJ, GPU Energy, Borough of Madison Electric Department, Sussex Rural Electric Cooperative, Rockland Utilities, and Butler Municipal Electric Co.
These rates do not apply to work on substations or switching stations.
For Utility work contracted for by a utility company other than those listed above or those listed under "Electrician-Utility Work (South), see the "Outside Commercial Rates" for the county in which the jobsite is located.

* FOR OUTSIDE COMMERCIAL RATES PLEASE SEE COUNTY RATES

The regular workday is 8 hours, between 6:00 AM and 6:00 PM.
FOR EMERGENCY WORK ONLY: (emergency work is defined as work caused by storm, catastrophe, act of god, and circumstances beyond the control of the employer)-all hours of work shall be paid at double the hourly rate.
SHIFT DIFFERENTIALS:
Shift work must run for a minimum of 5 consecutive workdays.
2nd shift (between the hours of 4:30 PM and 1:00 AM): 8 hours of work + 17.3% of the regular rate, inclusive of benefits.
3rd shift (between the hours of 12:30 AM and 9:00 AM): 8 hours of work + 31.4% of the regular rate per hour, inclusive of benefits.

OVERTIME:
Hours in excess of 8 per day, or before or after the regular wokday Monday through Friday, that is not shift work, and all hours on Saturday shall be paid at time and one-half the regular rate, inclusive of benefits. All hours on Sundays and holidays shall be paid at double the hourly rate, inclusive of benefits.
Four 10-hour days may worked, at straight time, between 6:00 AM and 6:00 PM, Monday through Thursday.

RECOGNIZED HOLIDAYS:
New Year's Day, Presidents' Day, Memorial Day, July 4th, Labor Day, Presidential Election Day, Veterans' Day, Thanksgiving Day and Christmas Day, or day on which they are legally observed.

Effective Dates:

	12/04/2022		**12/03/2023**	**12/01/2024**
Rate	Fringe	Total	Total	Total
61.07	42.13	103.20	106.36	109.56

CLASSIFICATIONS:

Chief Lineman

Effective Dates:

	12/04/2022		**12/03/2023**	**12/01/2024**
Rate	Fringe	Total	Total	Total
57.61	39.75	97.36	100.35	103.36

CLASSIFICATIONS:

Journeyman Lineman

ELECTRICIAN- UTILITY WORK (NORTH) **Rates Expiration Date :**

Effective Dates:

	12/04/2022		12/03/2023	12/01/2024
Rate	Fringe	Total	Total	Total
57.61	39.75	97.36	100.35	103.36

CLASSIFICATIONS:

Special License Operator

Effective Dates:

	12/04/2022		12/03/2023	12/01/2024
Rate	Fringe	Total	Total	Total
57.03	39.35	96.38	99.35	102.32

CLASSIFICATIONS:

Transit Man

Effective Dates:

	12/04/2022		12/03/2023	12/01/2024
Rate	Fringe	Total	Total	Total
55.31	38.16	93.47	96.33	99.21

CLASSIFICATIONS:

Line Equipment Operator

Effective Dates:

	12/04/2022		12/03/2023	12/01/2024
Rate	Fringe	Total	Total	Total
48.39	33.38	81.77	84.29	86.81

CLASSIFICATIONS:

Dynamite Man

Effective Dates:

	12/04/2022		12/03/2023	12/01/2024
Rate	Fringe	Total	Total	Total
72.01	49.68	121.69	125.44	129.20

CLASSIFICATIONS:

General Foreman

Effective Dates:

	12/04/2022		12/03/2023	12/01/2024
Rate	Fringe	Total	Total	Total
66.25	45.71	111.96	115.41	118.85

CLASSIFICATIONS:

Assistant General Foreman

ELECTRICIAN- UTILITY WORK (NORTH) **Rates Expiration Date :**

Effective Dates:

12/04/2022			12/03/2023	12/01/2024
Rate	Fringe	Total	Total	Total
64.52	44.51	109.03	112.40	115.76

CLASSIFICATIONS:

Line Foreman

Effective Dates:

12/04/2022			12/03/2023	12/01/2024
Rate	Fringe	Total	Total	Total
46.66	32.19	78.85	81.28	83.72

CLASSIFICATIONS:

Street Light Mechanical Leader

Effective Dates:

12/04/2022			12/03/2023	12/01/2024
Rate	Fringe	Total	Total	Total
44.36	30.60	74.96	77.26	79.58

CLASSIFICATIONS:

Groundman Winch Operator

Effective Dates:

12/04/2022			12/03/2023	12/01/2024
Rate	Fringe	Total	Total	Total
44.36	30.60	74.96	77.26	79.58

CLASSIFICATIONS:

Groundman Truck Operator

Effective Dates:

12/04/2022			12/03/2023	12/01/2024
Rate	Fringe	Total	Total	Total
43.78	30.20	73.98	76.26	78.55

CLASSIFICATIONS:

Street Light Mechanic

Effective Dates:

12/04/2022			12/03/2023	12/01/2024
Rate	Fringe	Total	Total	Total
43.78	30.20	73.98	76.26	78.55

CLASSIFICATIONS:

Line Equipment Mechanic

NEW JERSEY DEPARTMENT OF LABOR AND WORKFORCE DEVELOPMENT
PREVAILING WAGE RATE DETERMINATION

ELECTRICIAN- UTILITY WORK (NORTH) **Rates Expiration Date :**

Effective Dates:

	12/04/2022		12/03/2023	12/01/2024
Rate	Fringe	Total	Total	Total
37.45	25.84	63.29	65.23	67.17

CLASSIFICATIONS:

Groundman 2nd Year

Effective Dates:

	12/04/2022		12/03/2023	12/01/2024
Rate	Fringe	Total	Total	Total
34.57	23.85	58.42	60.21	62.02

CLASSIFICATIONS:

Groundman 1st Year

Effective Dates:

	12/04/2022		12/03/2023	12/01/2024
Rate	Fringe	Total	Total	Total
57.03	39.35	96.38	99.35	102.32

CLASSIFICATIONS:

Line Equipment Foreman

ELECTRICIAN- UTILITY WORK (SOUTH) **Rates Expiration Date :**

Electrician-Utility Work (South)
(For apprentice rates refer to Electrician-Utility Work (South) in any county rate package).
These rates apply to work contracted for by the following utility company:
Atlantic City Electric.
These rates do not apply to work on substations or switching stations.
For utility work contracted for by a utility company other than the one listed above or those listed under "Electrician-Utility Work (North), see the "Outside Commercial Rates" for the county in which the jobsite is located.

* FOR OUTSIDE COMMERCIAL RATES PLEASE SEE COUNTY RATES

The regular workday is 8 hours, between 7:00 AM and 4:30 PM.
FOR EMERGENCY WORK ONLY: (emergency work is defined as work caused by storm, catastrophe, act of god, and circumstances beyond the control of the employer)- all hours of work shall be paid at double the hourly rate.
SHIFT DIFFERENTIALS:
Shift work must run for a minimum of 5 consecutive workdays.
When two (2) or three (3) shifts are worked the following shall apply:
1st shift (between the hours of 8:00 AM and 4:30 PM)
2nd shift (between the hours of 4:30 PM and 12:30 AM): 8 hours of work + 10% of the regular rate of pay for 7.5 hours worked.

3rd shift (between the hours of 12:30 AM and 8:00 AM): 8 hours of work + 15% of the regular rate of pay for 7 hours worked.

OVERTIME:
Hours in excess of 8 per day, or before or after the regular wokday Monday through Friday, that is not shift work, and all hours on Saturday shall be paid at time and one-half the regular rate. All hours on Sundays and Holidays shall be paid double the hourly rate.

Four 10-hour days may be worked, at straight time, between 6:00 AM and 6:00 PM, Monday through Thursday with Friday used as a make-up day.

RECOGNIZED HOLIDAYS:
New Year's Day, Memorial Day, July 4th, Labor Day, Veterans' Day, Thanksgiving Day and Christmas Day or on days celebrated.

WORKING RULES:
There shall be a Foreman in charge of each work crew. No crews are to exceed twelve (12) men, including Foremen.

There shall be a General Foreman designated for transmission work when three (3) or more crews are on the same job and for distribution work where there are are more than twenty (20) employees on site.
A small job crew shall consist of five (5) or less employees, one (1) of the Journeyman Linemen in the crew shall be designated as a Small Job Foreman.
Work performed from ladders and/or mechanical lift equipment shall be the work of Linemen and/or Apprentices.
On new construction, fitting and framing poles, towers or structures may be done by Journeymen and/ or Apprentices. Groundmen may assist, but may not perform any work which would be performed by Linemen if assembled in the air.
There shall be a Journeyman Lineman in each pole setting, erection, grounding, wire and cable-pulling crew of more than three (3) men.

Effective Dates:

12/04/2022

Rate	Fringe	Total
67.52	55.11	122.63

CLASSIFICATIONS:

General Foreman

ELECTRICIAN- UTILITY WORK (SOUTH) **Rates Expiration Date :**

Effective Dates:

12/04/2022

Rate	Fringe	Total
60.14	50.62	110.76

CLASSIFICATIONS:

Foreman

Effective Dates:

12/04/2022

Rate	Fringe	Total
56.97	48.72	105.69

CLASSIFICATIONS:

Small Job Foreman

Effective Dates:

12/04/2022

Rate	Fringe	Total
52.75	46.18	98.93

CLASSIFICATIONS:

Heavy Equipment Operator

Effective Dates:

12/04/2022

Rate	Fringe	Total
52.75	46.18	98.93

CLASSIFICATIONS:

Cable Splicer

Effective Dates:

12/04/2022

Rate	Fringe	Total
52.75	46.18	98.93

CLASSIFICATIONS:

Journeyman Lineman

Effective Dates:

12/04/2022

Rate	Fringe	Total
52.75	46.18	98.93

CLASSIFICATIONS:

Journeyman Welder

ELECTRICIAN- UTILITY WORK (SOUTH) **Rates Expiration Date :**

Effective Dates:

12/04/2022

Rate	Fringe	Total
52.75	46.18	98.93

CLASSIFICATIONS:

Journeyman Painter

Effective Dates:

12/04/2022

Rate	Fringe	Total
42.20	39.80	82.00

CLASSIFICATIONS:

Light Equipment Operator

Effective Dates:

12/04/2022

Rate	Fringe	Total
36.93	36.60	73.53

CLASSIFICATIONS:

Groundman Truck Driver

Effective Dates:

12/04/2022

Rate	Fringe	Total
34.29	35.02	69.31

CLASSIFICATIONS:

Groundman 3rd Year

Effective Dates:

12/04/2022

Rate	Fringe	Total
31.65	33.42	65.07

CLASSIFICATIONS:

Groundman 2nd Year

Effective Dates:

12/04/2022

Rate	Fringe	Total
29.01	31.83	60.84

CLASSIFICATIONS:

Groundman 1st Year

NEW JERSEY DEPARTMENT OF LABOR AND WORKFORCE DEVELOPMENT
PREVAILING WAGE RATE DETERMINATION

ELECTRICIAN- UTILITY WORK (SOUTH) **Rates Expiration Date :**

Effective Dates:

12/04/2022

Rate	Fringe	Total
23.21	28.31	51.52

CLASSIFICATIONS:

Flagman

HEAVY & GENERAL LABORERS- NEW TRANS HUDSON TUNNELS **Rates Expiration Date :**

THESE RATES APPLY TO CONSTRUCTION ON NEW TRANS HUDSON TUNNELS ONLY

{For apprentice rates refer to "Laborer - Heavy & General" apprentice rates in any county rate package}

The regular workday consists of 8 hours, starting at 7:00 AM or 8:00 AM.

SHIFT DIFFERENTIALS:
- Shifts must start at 3:00 PM, 4:00 PM, 12:00 AM, or 1:00 AM, to be considered shift work, except when the project owner mandates special hours of work in the job specifications, in which case those hours may be considered shift work.
- When such hours are mandated by the project owner, a shift that begins before midnight on Friday and ends on Saturday morning, or that begins at or after 8:00 PM on Sunday and ends on Monday morning may be paid at the shift differential rate.
- Shifts shall receive an additional $3.00 per hour.

OVERTIME:
- Hours in excess of 8 per day, Monday through Friday, or outside of the regular workday that are not shift work, and all hours on Saturdays, shall be paid at time and one-half the hourly rate. All hours on Sundays and holidays shall be paid at double the hourly rate.
- Four 10-hour days may be worked, Monday through Thursday, at straight time, with Friday used as a make-up day for a day lost to inclement weather. If Friday is not a make-up day, all hours on Friday shall be paid at time and one-half the hourly rate.

RECOGNIZED HOLIDAYS: New Year's Day, Presidents' Day, Memorial Day, July 4th, Labor Day, Presidential Election Day, Veterans' Day, Thanksgiving Day, Christmas Day. Sunday holidays observed the following Monday. Veterans Day may be substituted for the day after Thanksgiving. However, in the trading of Veterans Day for the day after Thanksgiving, if overtime is worked on Veterans Day, it shall be paid at double the hourly rate.

Hazardous Waste Work:
-where Level A, B, or C protection is required: + $3.00/hr
-other Hazardous Waste site: + $1.00/hr

Effective Dates:

03/01/2022			03/01/2023
Rate	Fringe	Total	Total
72.98	34.88	107.86	111.19

CLASSIFICATIONS:

Walking Boss & Superintendent

Effective Dates:

03/01/2022			03/01/2023
Rate	Fringe	Total	Total
72.53	34.88	107.41	110.74

CLASSIFICATIONS:

Heading Foreman, Shaft Foreman, Rod Foreman, Electrical Foreman, Rigging Foreman

HEAVY & GENERAL LABORERS- NEW TRANS HUDSON TUNNELS **Rates Expiration Date :**

Effective Dates:

03/01/2022			03/01/2023
Rate	Fringe	Total	Total
71.78	34.88	106.66	109.99

CLASSIFICATIONS:

Iron Foreman, Caulking Foreman, Form Foreman, Cement Finishing Foreman, Concrete Foreman, Track Foreman, Clean-up Foreman, Grout Foreman

Effective Dates:

03/01/2022			03/01/2023
Rate	Fringe	Total	Total
75.53	34.88	110.41	113.74

CLASSIFICATIONS:

Blaster

Effective Dates:

03/01/2022			03/01/2023
Rate	Fringe	Total	Total
70.95	34.88	105.83	109.16

CLASSIFICATIONS:

Top Labor Foreman

Effective Dates:

03/01/2022			03/01/2023
Rate	Fringe	Total	Total
70.43	34.88	105.31	108.64

CLASSIFICATIONS:

Skilled Men (including Caulker, Powder Carrier, all other skilled men)
Skilled Men (including Miner, Drill Runner, Iron Man, Conveyor Man, Maintenance Man, Safety Miner, Rigger, Block Layer, Cement Finisher, Rod Man)

Effective Dates:

03/01/2022			03/01/2023
Rate	Fringe	Total	Total
70.20	34.88	105.08	108.41

CLASSIFICATIONS:

Semi-Skilled Men (including Bell or Signal Man top or bottom, Form Worker & Mover, Concrete Worker, Shaft Man, Tunnel Laborer, Caulker's Helper, all other semi-skilled)
Semi-Skilled Men (including Miner's Helper, Chuck Tender, Track Man, Nipper, Brake Man, Derail Man, Cable Man, Hose Man, Gravel Man, Form Man)

NEW JERSEY DEPARTMENT OF LABOR AND WORKFORCE DEVELOPMENT
PREVAILING WAGE RATE DETERMINATION

HEAVY & GENERAL LABORERS- NEW TRANS HUDSON TUNNELS **Rates Expiration Date :**

Effective Dates:

03/01/2022			03/01/2023
Rate	Fringe	Total	Total
69.60	34.88	104.48	107.81

CLASSIFICATIONS:

All others (including Powder Watchman, Change House Attendant, Top Laborer, Job Steward)

AIA® Document A101® – 2017

Standard Form of Agreement Between Owner and Contractor *where the basis of payment is a Stipulated Sum*

NEW JERSEY LOCAL PUBLIC CONTRACTS LAW
(Rev 12-01-2021)

AGREEMENT made as of the day of in the year
(In words, indicate day, month and year.)

BETWEEN the Owner:
(Name, legal status, address and other information)

and the Contractor:
(Name, legal status, address and other information)

for the following Project:
(Name, location and detailed description)

The Architect:
(Name, legal status, address and other information)

The Owner and Contractor agree as follows.

ADDITIONS AND DELETIONS:
The author of this document has added information needed for its completion. The author may also have revised the text of the original AIA standard form. An *Additions and Deletions Report* that notes added information as well as revisions to the standard form text is available from the author and should be reviewed. A vertical line in the left margin of this document indicates where the author has added necessary information and where the author has added to or deleted from the original AIA text.

This document has important legal consequences. Consultation with an attorney is encouraged with respect to its completion or modification.

The parties should complete A101®–2017, Exhibit A, Insurance and Bonds, contemporaneously with this Agreement. AIA Document A201®–2017, General Conditions of the Contract for Construction, is adopted in this document by reference. Do not use with other general conditions unless this document is modified.

AIA Document A101® – 2017. Copyright © 1915, 1918, 1925, 1937, 1951, 1958, 1961, 1963, 1967, 1974, 1977, 1987, 1991, 1997, 2007 and 2017 by The American Institute of Architects. All rights reserved. The "American Institute of Architects," "AIA," the AIA Logo, "A101," and "AIA Contract Documents" are registered trademarks and may not be used without permission. This document was produced by AIA software at 13:19:33 ET on 03/18/2022 under Order No.2114262975 which expires on 12/03/2022, is not for resale, is licensed for one-time use only, and may only be used in accordance with the AIA Contract Documents® Terms of Service. To report copyright violations, e-mail copyright@aia.org.
User Notes: (1299735627)

TABLE OF ARTICLES

1 THE CONTRACT DOCUMENTS

2 THE WORK OF THIS CONTRACT

3 DATE OF COMMENCEMENT AND SUBSTANTIAL COMPLETION

4 CONTRACT SUM

5 PAYMENTS

6 DISPUTE RESOLUTION

7 TERMINATION OR SUSPENSION

8 MISCELLANEOUS PROVISIONS

9 ENUMERATION OF CONTRACT DOCUMENTS

EXHIBIT A INSURANCE AND BONDS

ARTICLE 1 THE CONTRACT DOCUMENTS

The Contract Documents consist of this Agreement, Conditions of the Contract (General, Supplementary, and other Conditions), Drawings, Specifications, and Addenda issued prior to the receipt of public bids pursuant to the Local Public Contracts Law. All of the foregoing shall form the Contract, and are as fully a part of the Contract as if attached to this Agreement or repeated herein. The Contract represents the entire and integrated agreement between the parties hereto and supersedes prior negotiations, representations, or agreements, either written or oral.

ARTICLE 2 THE WORK OF THIS CONTRACT

The Contractor shall fully execute the Work described in the Contract Documents, except as specifically indicated in the Contract Documents to be the responsibility of others.

ARTICLE 3 DATE OF COMMENCEMENT AND SUBSTANTIAL COMPLETION

§ 3.1 The date of commencement of the Work shall

(Paragraphs deleted)

be a date set forth in a notice to proceed issued by the Owner.

(Paragraphs deleted)

§ 3.2 The Contract Time shall be measured from the date of commencement of the Work.

§ 3.3 Substantial Completion

§ 3.3.1 Subject to adjustments of the Contract Time as provided in the Contract Documents, the Contractor shall achieve Substantial Completion of the entire Work:

(Check one of the following boxes and complete the necessary information.)

[ ] Not later than ( ) calendar days from the date of commencement of the Work.

[ ] By the following date:

§ 3.3.2 Subject to adjustments of the Contract Time as provided in the Contract Documents, if portions of the Work are to be completed prior to Substantial Completion of the entire Work, the Contractor shall achieve Substantial Completion of such portions by the following dates:

Portion of Work	Substantial Completion Date

AIA Document A101® – 2017. Copyright © 1915, 1918, 1925, 1937, 1951, 1958, 1961, 1963, 1967, 1974, 1977, 1987, 1991, 1997, 2007 and 2017 by The American Institute of Architects. All rights reserved. The "American Institute of Architects," "AIA," the AIA Logo, "A101," and "AIA Contract Documents" are registered trademarks and may not be used without permission. This document was produced by AIA software at 13:19:33 ET on 03/18/2022 under Order No.2114262975 which expires on 12/03/2022, is not for resale, is licensed for one-time use only, and may only be used in accordance with the AIA Contract Documents® Terms of Service. To report copyright violations, e-mail copyright@aia.org.
User Notes: (1299735627)

§ 3.3.3 If the Contractor fails to achieve Substantial Completion as provided in this Section 3.3, liquidated damages, if any, shall be assessed as set forth in Section 4.5.

ARTICLE 4 CONTRACT SUM

§ 4.1 The Owner shall pay the Contractor the Contract Sum in current funds for the Contractor's performance of the Contract. The Contract Sum shall be ($), subject to additions and deductions as provided in the Contract Documents.

§ 4.2 Alternates

§ 4.2.1 Alternates, if any, included in the Contract Sum:

Item	Price

§ 4.2.2 Subject to the conditions noted below, the following alternates may be accepted by the Owner following execution of this Agreement. Upon acceptance, the Owner shall issue a Modification to this Agreement.
(Insert below each alternate and the conditions that must be met for the Owner to accept the alternate.)

Item	Price	Conditions for Acceptance

§ 4.3 Allowances, if any, included in the Contract Sum:
(Identify each allowance.)

Item	Price

§ 4.4 Unit prices, if any:
(Identify the item and state the unit price and quantity limitations, if any, to which the unit price will be applicable.)

Item	Units and Limitations	Price per Unit ($0.00)

§ 4.5 Liquidated damages, if any:
(Insert terms and conditions for liquidated damages, if any.)

(Paragraphs deleted)

ARTICLE 5 PAYMENTS

§ 5.1 Progress Payments

§ 5.1.1 Based upon Applications for Payment submitted to the Architect by the Contractor and Certificates for Payment issued by the Architect, the Owner shall make progress payments on account of the Contract Sum to the Contractor as provided below and elsewhere in the Contract Documents.

§ 5.1.2 The period covered by each Application for Payment shall be one calendar month ending on the last day of the month.

§ 5.1.3 Contractor shall submit an Application for Payment no later than the 25th day of the month. Each Application for Payment shall be based on the most recent schedule of values submitted by the Contractor in accordance with the Contract Documents. The schedule of values shall allocate the entire Contract Sum among the various portions of the Work. The schedule of values shall be prepared in such form, and supported by such data to substantiate its accuracy, as the Architect may require. This schedule of values shall be used as a basis for reviewing the Contractor's Applications for Payment. Payment to Contractor shall be pursuant to the New Jersey Prompt Payment Law as set forth in Section 5.1.6 hereinbelow.

AIA Document A101® – 2017. Copyright © 1915, 1918, 1925, 1937, 1951, 1958, 1961, 1963, 1967, 1974, 1977, 1987, 1991, 1997, 2007 and 2017 by The American Institute of Architects. All rights reserved. The "American Institute of Architects," "AIA," the AIA Logo, "A101," and "AIA Contract Documents" are registered trademarks and may not be used without permission. This document was produced by AIA software at 13:19:33 ET on 03/18/2022 under Order No.2114262975 which expires on 12/03/2022, is not for resale, is licensed for one-time use only, and may only be used in accordance with the AIA Contract Documents® Terms of Service. To report copyright violations, e-mail copyright@aia.org.
User Notes: (1299735627)

§ 5.1.4 Applications for Payment shall show the percentage of completion of each portion of the Work as of the end of the period covered by the Application for Payment. General Conditions shall be included in the Schedule of Value and paid on a percentage of Work complete and not based on equal monthly payments.

§ 5.1.5 In accordance with AIA Document A201™–2017, General Conditions of the Contract for Construction, and subject to other provisions of the Contract Documents, the amount of each progress payment shall be computed as follows:

§ 5.1.5.1 The amount of each progress payment shall first include:

- **.1** That portion of the Contract Sum properly allocable to completed Work;
- **.2** That portion of the Contract Sum properly allocable to materials and equipment delivered and suitably stored at the site for subsequent incorporation in the completed construction, or, if approved in advance by the Owner, suitably stored off the site at a location agreed upon in writing; and
- **.3** That portion of Construction Change Directives that the Architect determines, in the Architect's professional judgment, to be reasonably justified.

§ 5.1.5.2 The amount of each progress payment shall then be reduced by:

- **.1** The aggregate of any amounts previously paid by the Owner;
- **.2** The amount, if any, for Work that remains uncorrected and for which the Architect has previously withheld a Certificate for Payment as provided in Article 9 of AIA Document A201–2017;
- **.3** Any amount for which the Contractor does not intend to pay a Subcontractor or material supplier, unless the Work has been performed by others the Contractor intends to pay;
- **.4** For Work performed or defects discovered since the last payment application, any amount for which the Architect may withhold payment, or nullify a Certificate of Payment in whole or in part, as provided in Article 9 of AIA Document A201–2017; and
- **.5** Retainage withheld pursuant to Section 5.1.7.

§ 5.1.6 Payment to Contractor shall be pursuant to the Prompt Payment Act, **N.J.S.A.** 2A:30A-2 *et seq.* In-part; .

.1. If a Contractor has performed in accordance with the provisions of the Contract Documents and the Contractor's Application for Payment has been approved and certified by the Owner and the Owner's authorized approving agent, the Owner shall pay the amount due to the Contractor for each periodic payment, final payment or retainage monies not more than 30 calendar days after the billing date, which for a periodic billing, shall be the periodic billing date specified in this contract. The Application for payment shall be deemed approved and certified 20 days after the Owner receives it unless the Owner provides, before the end of the 20-day period, a written statement of the amount withheld and the reason for withholding payment, except that in the event that the Owner (i.e., governing body) is required to vote on authorizations for each periodic payment, final payment or retainage monies, the amount due may be approved and certified at the next scheduled public meeting of the entity's governing body, and paid during the entity's subsequent payment cycle.

.2 Disputes regarding whether a party has failed to make payments required pursuant to this section may be submitted to a process of alternative dispute resolution. Alternative dispute resolution permitted by this section shall not apply to disputes concerning the bid solicitation or award process, or to the formation of contracts or subcontracts. In any civil action brought to collect payments pursuant to this section, the action shall be conducted within the County of the Owner State and the prevailing party shall be awarded reasonable costs and attorney fees.

(Paragraphs deleted)

§ 5.1.7 Retainage

§ 5.1.7.1 For each progress payment made prior to Substantial Completion of the Work, the Owner shall withhold the following amount, as retainage, from the payment otherwise due:

(Paragraph deleted)

- Contract Value from $0.00 to $500,000.00 – Five (5%) Percent
- Contract Value from $500,001.00 and greater – Two (2%) Percent

(Paragraphs deleted)

AIA Document A101® – 2017. Copyright © 1915, 1918, 1925, 1937, 1951, 1958, 1961, 1963, 1967, 1974, 1977, 1987, 1991, 1997, 2007 and 2017 by The American Institute of Architects. All rights reserved. The "American Institute of Architects," "AIA," the AIA Logo, "A101," and "AIA Contract Documents" are registered trademarks and may not be used without permission. This document was produced by AIA software at 13:19:33 ET on 03/18/2022 under Order No.2114262975 which expires on 12/03/2022, is not for resale, is licensed for one-time use only, and may only be used in accordance with the AIA Contract Documents® Terms of Service. To report copyright violations, e-mail copyright@aia.org.
User Notes: (1299735627)

§ 5.1.8 If final completion of the Work is materially delayed through no fault of the Contractor, the Owner shall pay the Contractor any additional amounts in accordance with Article 9 of AIA Document A201–2017. If there are any claims or disputes, the Contractor is to submit in accordance with Article 15 as a pre-requisite to such a claim. Notwithstanding the foregoing and anything construed to the contrary, the foregoing shall only be applicable in the event that: (i) the Contractor has produced an updated Schedule prior to the alleged material delay; and (ii) there are no components of the project for which the Contractor has delayed; and (iii) the alleged materially delayed component of the project affects the critical path and no other Work can continue to keep the project on schedule.

§ 5.1.9 Except with the Owner's prior approval, the Contractor shall not make advance payments to suppliers for materials or equipment which have not been delivered and stored at the site.

§ 5.2 Final Payment

§ 5.2.1 Final payment, constituting the entire unpaid balance of the Contract Sum, shall be made by the Owner to the Contractor when

.1 the Contractor has fully performed the Contract except for the Contractor's responsibility to correct Work as provided in Article 12 of AIA Document A201–2017, and to satisfy other requirements, if any, which extend beyond final payment; and

.2 a final Certificate for Payment has been issued by the Architect.

§ 5.2.2 The Owner's final payment to the Contractor shall be made no later than 30 days after the issuance of the Architect's final Certificate for Payment.

(Paragraphs deleted)

ARTICLE 6 DISPUTE RESOLUTION

§ 6.1 Initial Decision Maker

The Architect will serve as the Initial Decision Maker pursuant to Article 15 of AIA Document A201–2017, unless the parties appoint below another individual, not a party to this Agreement, to serve as the Initial Decision Maker.

(Paragraphs deleted)

Notwithstanding the foregoing designation, the Contractor acknowledges that the Architect is the Owner's designated Agent for this Project and, thus, the Architect shall not be precluded from serving in its role as the Owner's Agent. The Contractor hereby waives any alleged conflict of interest in this regard.

§ 6.2 Binding Dispute Resolution

For any Claim subject to, but not resolved by, mediation pursuant to Article 15 of AIA Document A201–2017, the method of binding dispute resolution shall be

(Paragraphs deleted)

via litigation in a court of competent jurisdiction.

ARTICLE 7 TERMINATION OR SUSPENSION

§ 7.1 The Contract may be terminated by the Owner or the Contractor as provided in Article 14 of AIA Document A201–2017.

§ 7.1.1 If the Contract is terminated for the Owner's convenience in accordance with Article 14 of AIA Document A201–2017, then the Owner shall pay the Contractor

(Paragraphs deleted)

for any Work in place as certified by the Architect.

§ 7.2 The Work may be suspended by the Owner as provided in Article 14 of AIA Document A201–2017.

ARTICLE 8 MISCELLANEOUS PROVISIONS

§ 8.1 Where reference is made in this Agreement to a provision of AIA Document A201–2017 or another Contract Document, the reference refers to that provision as amended or supplemented by other provisions of the Contract Documents.

§ 8.2 The Owner's representative:

AIA Document A101® – 2017. Copyright © 1915, 1918, 1925, 1937, 1951, 1958, 1961, 1963, 1967, 1974, 1977, 1987, 1991, 1997, 2007 and 2017 by The American Institute of Architects. All rights reserved. The "American Institute of Architects," "AIA," the AIA Logo, "A101," and "AIA Contract Documents" are registered trademarks and may not be used without permission. This document was produced by AIA software at 13:19:33 ET on 03/18/2022 under Order No.2114262975 which expires on 12/03/2022, is not for resale, is licensed for one-time use only, and may only be used in accordance with the AIA Contract Documents® Terms of Service. To report copyright violations, e-mail copyright@aia.org.

User Notes: (1299735627)

(Name, address, email address, and other information)

§ 8.3 The Contractor's representative:
(Name, address, email address, and other information)

§ 8.4 Neither the Owner's nor the Contractor's representative shall be changed without ten days' prior notice to the other party.

§ 8.5 Insurance and Bonds
§ 8.5.1 The Contractor shall purchase and maintain insurance as set forth in AIA Document A101™–2017, Standard Form of Agreement Between Owner and Contractor or as set forth in the Contract Documents or by applicable law.

§ 8.5.2 The Contractor shall provide bonds as set forth in AIA Document A101™–2017 Exhibit A, and elsewhere in the Contract Documents or as set forth by applicable law.

§ 8.6 Notice in electronic
(Paragraphs deleted)
format is acceptable.

§ 8.7 Other provisions:

ARTICLE 9 ENUMERATION OF CONTRACT DOCUMENTS
§ 9.1 This Agreement is comprised of the following documents:

.1 AIA Document A101™–2017, Standard Form of Agreement Between Owner and Contractor
.2 AIA Document A201™–2017, General Conditions of the Contract for Construction
(Paragraphs deleted)
.3 Contract Documents including General Conditions, General and Technical Specifications and Drawings.
.4 Addenda as may be issued pursuant to the Public Contracts Law.

.5 Drawings

Number	Title	Date

.6 Specifications

Section	Title	Date	Pages

.7 Addenda, if any:

Number	Date	Pages

(Paragraphs deleted)
(Table deleted)

*(Paragraphs deleted)*This Agreement entered into as of the day and year first written above.

AIA Document A101® – 2017. Copyright © 1915, 1918, 1925, 1937, 1951, 1958, 1961, 1963, 1967, 1974, 1977, 1987, 1991, 1997, 2007 and 2017 by The American Institute of Architects. All rights reserved. The "American Institute of Architects," "AIA," the AIA Logo, "A101," and "AIA Contract Documents" are registered trademarks and may not be used without permission. This document was produced by AIA software at 13:19:33 ET on 03/18/2022 under Order No.2114262975 which expires on 12/03/2022, is not for resale, is licensed for one-time use only, and may only be used in accordance with the AIA Contract Documents® Terms of Service. To report copyright violations, e-mail copyright@aia.org.
User Notes: (1299735627)

OWNER *(Signature)*	**CONTRACTOR** *(Signature)*
(Printed name and title)	*(Printed name and title)*

Revised – December 2021

AIA Document A101® – 2017. Copyright © 1915, 1918, 1925, 1937, 1951, 1958, 1961, 1963, 1967, 1974, 1977, 1987, 1991, 1997, 2007 and 2017 by The American Institute of Architects. All rights reserved. The "American Institute of Architects," "AIA," the AIA Logo, "A101," and "AIA Contract Documents" are registered trademarks and may not be used without permission. This document was produced by AIA software at 13:19:33 ET on 03/18/2022 under Order No.2114262975 which expires on 12/03/2022, is not for resale, is licensed for one-time use only, and may only be used in accordance with the AIA Contract Documents® Terms of Service. To report copyright violations, e-mail copyright@aia.org.
User Notes: (1299735627)

AIA® Document A201® – 2017

General Conditions of the Contract for Construction

for the following PUBLIC PROJECT pursuant to the New Jersey Public Contracts Law :
(REV 12-01-2021)

(Name and location or address)

THE OWNER: (Name, legal status and address)

THE ARCHITECT:

DMR Architects, PC
777 Terrace Avenue, Hasbrouck Heights, N.J. 07604

ADDITIONS AND DELETIONS:
The author of this document has added information needed for its completion. The author may also have revised the text of the original AIA standard form. An *Additions and Deletions Report* that notes added information as well as revisions to the standard form text is available from the author and should be reviewed. A vertical line in the left margin of this document indicates where the author has added necessary information and where the author has added to or deleted from the original AIA text.

This document has important legal consequences. Consultation with an attorney is encouraged with respect to its completion or modification.

For guidance in modifying this document to include supplementary conditions, see AIA Document A503™, Guide for Supplementary Conditions.

TABLE OF ARTICLES

1 GENERAL PROVISIONS

2 OWNER

3 CONTRACTOR

4 ARCHITECT

5 SUBCONTRACTORS

6 CONSTRUCTION BY OWNER OR BY SEPARATE CONTRACTORS

7 CHANGES IN THE WORK

8 TIME

9 PAYMENTS AND COMPLETION

10 PROTECTION OF PERSONS AND PROPERTY

11 INSURANCE AND BONDS

12 UNCOVERING AND CORRECTION OF WORK

13 MISCELLANEOUS PROVISIONS

14 TERMINATION OR SUSPENSION OF THE CONTRACT

15 CLAIMS AND DISPUTES

Init.

/

AIA Document A201® – 2017. Copyright © 1911, 1915, 1918, 1925, 1937, 1951, 1958, 1961, 1963, 1966, 1970, 1976, 1987, 1997, 2007 and 2017 by The American Institute of Architects. All rights reserved. The "American Institute of Architects," "AIA," the AIA Logo, "A201," and "AIA Contract Documents" are registered trademarks and may not be used without permission. This document was produced by AIA software at 11:08:54 ET on 03/18/2022 under Order No.2114262975 which expires on 12/03/2022, is not for resale, is licensed for one-time use only, and may only be used in accordance with the AIA Contract Documents® Terms of Service. To report copyright violations, e-mail copyright@aia.org.
User Notes: (944467505)

INDEX
(Topics and numbers in bold are Section headings.)

Acceptance of Nonconforming Work
9.6.6, 9.9.3, **12.3**
Acceptance of Work
9.6.6, 9.8.2, 9.9.3, 9.10.1, 9.10.3, 12.3
Access to Work
3.16, 6.2.1, 12.1
Accident Prevention
10
Acts and Omissions
3.2, 3.3.2, 3.12.8, 3.18, 4.2.3, 8.3.1, 9.5.1, 10.2.5, 10.2.8, 13.3.2, 14.1, 15.1.2, 15.2
Addenda
1.1.1
Additional Costs, Claims for
3.7.4, 3.7.5, 10.3.2, 15.1.5
Additional Inspections and Testing
9.4.2, 9.8.3, 12.2.1, **13.4**
Additional Time, Claims for
3.2.4, 3.7.4, 3.7.5, 3.10.2, 8.3.2, **15.1.6**
Administration of the Contract
3.1.3, **4.2**, 9.4, 9.5
Advertisement or Invitation to Bid
1.1.1
Aesthetic Effect
4.2.13
Allowances
3.8
Applications for Payment
4.2.5, 7.3.9, 9.2, **9.3**, 9.4, 9.5.1, 9.5.4, 9.6.3, 9.7, 9.10
Approvals
2.1.1, 2.3.1, 2.5, 3.1.3, 3.10.2, 3.12.8, 3.12.9, 3.12.10.1, 4.2.7, 9.3.2, 13.4.1
Arbitration
8.3.1, 15.3.2, **15.4**
ARCHITECT
4
Architect, Definition of
4.1.1
Architect, Extent of Authority
2.5, 3.12.7, 4.1.2, 4.2, 5.2, 6.3, 7.1.2, 7.3.4, 7.4, 9.2, 9.3.1, 9.4, 9.5, 9.6.3, 9.8, 9.10.1, 9.10.3, 12.1, 12.2.1, 13.4.1, 13.4.2, 14.2.2, 14.2.4, 15.1.4, 15.2.1
Architect, Limitations of Authority and Responsibility
2.1.1, 3.12.4, 3.12.8, 3.12.10, 4.1.2, 4.2.1, 4.2.2, 4.2.3, 4.2.6, 4.2.7, 4.2.10, 4.2.12, 4.2.13, 5.2.1, 7.4, 9.4.2, 9.5.4, 9.6.4, 15.1.4, 15.2
Architect's Additional Services and Expenses
2.5, 12.2.1, 13.4.2, 13.4.3, 14.2.4
Architect's Administration of the Contract
3.1.3, 3.7.4, 15.2, 9.4.1, 9.5
Architect's Approvals
2.5, 3.1.3, 3.5, 3.10.2, 4.2.7
Architect's Authority to Reject Work
3.5, 4.2.6, 12.1.2, 12.2.1
Architect's Copyright
1.1.7, 1.5
Architect's Decisions
3.7.4, 4.2.6, 4.2.7, 4.2.11, 4.2.12, 4.2.13, 4.2.14, 6.3, 7.3.4, 7.3.9, 8.1.3, 8.3.1, 9.2, 9.4.1, 9.5, 9.8.4, 9.9.1, 13.4.2, 15.2
Architect's Inspections
3.7.4, 4.2.2, 4.2.9, 9.4.2, 9.8.3, 9.9.2, 9.10.1, 13.4
Architect's Instructions
3.2.4, 3.3.1, 4.2.6, 4.2.7, 13.4.2
Architect's Interpretations
4.2.11, 4.2.12
Architect's Project Representative
4.2.10
Architect's Relationship with Contractor
1.1.2, 1.5, 2.3.3, 3.1.3, 3.2.2, 3.2.3, 3.2.4, 3.3.1, 3.4.2, 3.5, 3.7.4, 3.7.5, 3.9.2, 3.9.3, 3.10, 3.11, 3.12, 3.16, 3.18, 4.1.2, 4.2, 5.2, 6.2.2, 7, 8.3.1, 9.2, 9.3, 9.4, 9.5, 9.7, 9.8, 9.9, 10.2.6, 10.3, 11.3, 12, 13.3.2, 13.4, 15.2
Architect's Relationship with Subcontractors
1.1.2, 4.2.3, 4.2.4, 4.2.6, 9.6.3, 9.6.4, 11.3
Architect's Representations
9.4.2, 9.5.1, 9.10.1
Architect's Site Visits
3.7.4, 4.2.2, 4.2.9, 9.4.2, 9.5.1, 9.9.2, 9.10.1, 13.4
Asbestos
10.3.1
Attorneys' Fees
3.18.1, 9.6.8, 9.10.2, 10.3.3
Award of Separate Contracts
6.1.1, 6.1.2
Award of Subcontracts and Other Contracts for Portions of the Work
5.2
Basic Definitions
1.1
Bidding Requirements
1.1.1
Binding Dispute Resolution
8.3.1, 9.7, 11.5, 13.1, 15.1.2, 15.1.3, 15.2.1, 15.2.5, 15.2.6.1, 15.3.1, 15.3.2, 15.3.3, 15.4.1
Bonds, Lien
7.3.4.4, 9.6.8, 9.10.2, 9.10.3
Bonds, Performance, and Payment
7.3.4.4, 9.6.7, 9.10.3, **11.1.2**, 11.1.3, **11.5**
Building Information Models Use and Reliance
1.8
Building Permit
3.7.1
Capitalization
1.3
Certificate of Substantial Completion
9.8.3, 9.8.4, 9.8.5

AIA Document A201® – 2017. Copyright © 1911, 1915, 1918, 1925, 1937, 1951, 1958, 1961, 1963, 1966, 1970, 1976, 1987, 1997, 2007 and 2017 by The American Institute of Architects. All rights reserved. The "American Institute of Architects," "AIA," the AIA Logo, "A201," and "AIA Contract Documents" are registered trademarks and may not be used without permission. This document was produced by AIA software at 11:08:54 ET on 03/18/2022 under Order No.2114262975 which expires on 12/03/2022, is not for resale, is licensed for one-time use only, and may only be used in accordance with the AIA Contract Documents® Terms of Service. To report copyright violations, e-mail copyright@aia.org.
User Notes:
(944467505)

Certificates for Payment
4.2.1, 4.2.5, 4.2.9, 9.3.3, **9.4**, 9.5, 9.6.1, 9.6.6, 9.7, 9.10.1, 9.10.3, 14.1.1.3, 14.2.4, 15.1.4
Certificates of Inspection, Testing or Approval
13.4.4
Certificates of Insurance
9.10.2
Change Orders
1.1.1, 3.4.2, 3.7.4, 3.8.2.3, 3.11, 3.12.8, 4.2.8, 5.2.3, 7.1.2, 7.1.3, **7.2**, 7.3.2, 7.3.7, 7.3.9, 7.3.10, 8.3.1, 9.3.1.1, 9.10.3, 10.3.2, 11.2, 11.5, 12.1.2
Change Orders, Definition of
7.2.1
CHANGES IN THE WORK
2.2.2, 3.11, 4.2.8, **7**, 7.2.1, 7.3.1, 7.4, 8.3.1, 9.3.1.1, 11.5
Claims, Definition of
15.1.1
Claims, Notice of
1.6.2, 15.1.3
CLAIMS AND DISPUTES
3.2.4, 6.1.1, 6.3, 7.3.9, 9.3.3, 9.10.4, 10.3.3, **15**, 15.4
Claims and Timely Assertion of Claims
15.4.1
Claims for Additional Cost
3.2.4, 3.3.1, 3.7.4, 7.3.9, 9.5.2, 10.2.5, 10.3.2, **15.1.5**
Claims for Additional Time
3.2.4, 3.3.1, 3.7.4, 6.1.1, 8.3.2, 9.5.2, 10.3.2, **15.1.6**
Concealed or Unknown Conditions, Claims for
3.7.4
Claims for Damages
3.2.4, 3.18, 8.3.3, 9.5.1, 9.6.7, 10.2.5, 10.3.3, 11.3, 11.3.2, 14.2.4, 15.1.7
Claims Subject to Arbitration
15.4.1
Cleaning Up
3.15, 6.3
Commencement of the Work, Conditions Relating to
2.2.1, 3.2.2, 3.4.1, 3.7.1, 3.10.1, 3.12.6, 5.2.1, 5.2.3, 6.2.2, 8.1.2, 8.2.2, 8.3.1, 11.1, 11.2, **15.1.5**
Commencement of the Work, Definition of
8.1.2
Communications
3.9.1, **4.2.4**
Completion, Conditions Relating to
3.4.1, 3.11, 3.15, 4.2.2, 4.2.9, 8.2, 9.4.2, 9.8, 9.9.1, 9.10, 12.2, 14.1.2, 15.1.2
COMPLETION, PAYMENTS AND
9
Completion, Substantial
3.10.1, 4.2.9, 8.1.1, 8.1.3, 8.2.3, 9.4.2, 9.8, 9.9.1, 9.10.3, 12.2, 15.1.2
Compliance with Laws
2.3.2, 3.2.3, 3.6, 3.7, 3.12.10, 3.13, 9.6.4, 10.2.2, 13.1, 13.3, 13.4.1, 13.4.2, 13.5, 14.1.1, 14.2.1.3, 15.2.8, 15.4.2, 15.4.3
Concealed or Unknown Conditions
3.7.4, 4.2.8, 8.3.1, 10.3
Conditions of the Contract
1.1.1, 6.1.1, 6.1.4
Consent, Written
3.4.2, 3.14.2, 4.1.2, 9.8.5, 9.9.1, 9.10.2, 9.10.3, 13.2, 15.4.4.2
Consolidation or Joinder
15.4.4
CONSTRUCTION BY OWNER OR BY SEPARATE CONTRACTORS
1.1.4, **6**
Construction Change Directive, Definition of
7.3.1
Construction Change Directives
1.1.1, 3.4.2, 3.11, 3.12.8, 4.2.8, 7.1.1, 7.1.2, 7.1.3, **7.3**, 9.3.1.1
Construction Schedules, Contractor's
3.10, 3.11, 3.12.1, 3.12.2, 6.1.3, 15.1.6.2
Contingent Assignment of Subcontracts
5.4, 14.2.2.2
Continuing Contract Performance
15.1.4
Contract, Definition of
1.1.2
CONTRACT, TERMINATION OR SUSPENSION OF THE
5.4.1.1, 5.4.2, 11.5, **14**
Contract Administration
3.1.3, 4, 9.4, 9.5
Contract Award and Execution, Conditions Relating to
3.7.1, 3.10, 5.2, 6.1
Contract Documents, Copies Furnished and Use of
1.5.2, 2.3.6, 5.3
Contract Documents, Definition of
1.1.1
Contract Sum
2.2.2, 2.2.4, 3.7.4, 3.7.5, 3.8, 3.10.2, 5.2.3, 7.3, 7.4, **9.1**, 9.2, 9.4.2, 9.5.1.4, 9.6.7, 9.7, 10.3.2, 11.5, 12.1.2, 12.3, 14.2.4, 14.3.2, 15.1.4.2, **15.1.5, 15.2.5**
Contract Sum, Definition of
9.1
Contract Time
1.1.4, 2.2.1, 2.2.2, 3.7.4, 3.7.5, 3.10.2, 5.2.3, 6.1.5, 7.2.1.3, 7.3.1, 7.3.5, 7.3.6, 7, 7, 7.3.10, 7.4, 8.1.1, 8.2.1, 8.2.3, 8.3.1, 9.5.1, 9.7, 10.3.2, 12.1.1, 12.1.2, 14.3.2, 15.1.4.2, 15.1.6.1, 15.2.5
Contract Time, Definition of
8.1.1
CONTRACTOR
3
Contractor, Definition of
3.1, 6.1.2
Contractor's Construction and Submittal Schedules
3.10, 3.12.1, 3.12.2, 4.2.3, 6.1.3, 15.1.6.2

AIA Document A201® – 2017. Copyright © 1911, 1915, 1918, 1925, 1937, 1951, 1958, 1961, 1963, 1966, 1970, 1976, 1987, 1997, 2007 and 2017 by The American Institute of Architects. All rights reserved. The "American Institute of Architects," "AIA," the AIA Logo, "A201," and "AIA Contract Documents" are registered trademarks and may not be used without permission. This document was produced by AIA software at 11:08:54 ET on 03/18/2022 under Order No.2114262975 which expires on 12/03/2022, is not for resale, is licensed for one-time use only, and may only be used in accordance with the AIA Contract Documents® Terms of Service. To report copyright violations, e-mail copyright@aia.org.
User Notes: (944467505)

Contractor's Employees
2.2.4, 3.3.2, 3.4.3, 3.8.1, 3.9, 3.18.2, 4.2.3, 4.2.6, 10.2, 10.3, 11.3, 14.1, 14.2.1.1
Contractor's Liability Insurance
11.1
Contractor's Relationship with Separate Contractors and Owner's Forces
3.12.5, 3.14.2, 4.2.4, 6, 11.3, 12.2.4
Contractor's Relationship with Subcontractors
1.2.2, 2.2.4, 3.3.2, 3.18.1, 3.18.2, 4.2.4, 5, 9.6.2, 9.6.7, 9.10.2, 11.2, 11.3, 11.4
Contractor's Relationship with the Architect
1.1.2, 1.5, 2.3.3, 3.1.3, 3.2.2, 3.2.3, 3.2.4, 3.3.1, 3.4.2, 3.5.1, 3.7.4, 3.10, 3.11, 3.12, 3.16, 3.18, 4.2, 5.2, 6.2.2, 7, 8.3.1, 9.2, 9.3, 9.4, 9.5, 9.7, 9.8, 9.9, 10.2.6, 10.3, 11.3, 12, 13.4, 15.1.3, 15.2.1
Contractor's Representations
3.2.1, 3.2.2, 3.5, 3.12.6, 6.2.2, 8.2.1, 9.3.3, 9.8.2
Contractor's Responsibility for Those Performing the Work
3.3.2, 3.18, 5.3, 6.1.3, 6.2, 9.5.1, 10.2.8
Contractor's Review of Contract Documents
3.2
Contractor's Right to Stop the Work
2.2.2, 9.7
Contractor's Right to Terminate the Contract
14.1
Contractor's Submittals
3.10, 3.11, 3.12, 4.2.7, 5.2.1, 5.2.3, 9.2, 9.3, 9.8.2, 9.8.3, 9.9.1, 9.10.2, 9.10.3
Contractor's Superintendent
3.9, 10.2.6
Contractor's Supervision and Construction Procedures
1.2.2, 3.3, 3.4, 3.12.10, 4.2.2, 4.2.7, 6.1.3, 6.2.4, 7.1.3, 7.3.4, 7.3.6, 8.2, 10, 12, 14, 15.1.4
Coordination and Correlation
1.2, 3.2.1, 3.3.1, 3.10, 3.12.6, 6.1.3, 6.2.1
Copies Furnished of Drawings and Specifications
1.5, 2.3.6, 3.11
Copyrights
1.5, **3.17**
Correction of Work
2.5, 3.7.3, 9.4.2, 9.8.2, 9.8.3, 9.9.1, 12.1.2, **12.2**, 12.3, 15.1.3.1, 15.1.3.2, 15.2.1
Correlation and Intent of the Contract Documents
1.2
Cost, Definition of
7.3.4
Costs
2.5, 3.2.4, 3.7.3, 3.8.2, 3.15.2, 5.4.2, 6.1.1, 6.2.3, 7.3.3.3, 7.3.4, 7.3.8, 7.3.9, 9.10.2, 10.3.2, 10.3.6, 11.2, 12.1.2, 12.2.1, 12.2.4, 13.4, 14
Cutting and Patching
3.14, 6.2.5
Damage to Construction of Owner or Separate Contractors
3.14.2, 6.2.4, 10.2.1.2, 10.2.5, 10.4, 12.2.4
Damage to the Work
3.14.2, 9.9.1, 10.2.1.2, 10.2.5, 10.4, 12.2.4
Damages, Claims for
3.2.4, 3.18, 6.1.1, 8.3.3, 9.5.1, 9.6.7, 10.3.3, 11.3.2, 11.3, 14.2.4, 15.1.7
Damages for Delay
6.2.3, 8.3.3, 9.5.1.6, 9.7, 10.3.2, 14.3.2
Date of Commencement of the Work, Definition of
8.1.2
Date of Substantial Completion, Definition of
8.1.3
Day, Definition of
8.1.4
Decisions of the Architect
3.7.4, 4.2.6, 4.2.7, 4.2.11, 4.2.12, 4.2.13, 6.3, 7.3.4, 7.3.9, 8.1.3, 8.3.1, 9.2, 9.4, 9.5.1, 9.8.4, 9.9.1, 13.4.2, 14.2.2, 14.2.4, 15.1, 15.2
Decisions to Withhold Certification
9.4.1, **9.5**, 9.7, 14.1.1.3
Defective or Nonconforming Work, Acceptance, Rejection and Correction of
2.5, 3.5, 4.2.6, 6.2.3, 9.5.1, 9.5.3, 9.6.6, 9.8.2, 9.9.3, 9.10.4, 12.2.1
Definitions
1.1, 2.1.1, 3.1.1, 3.5, 3.12.1, 3.12.2, 3.12.3, 4.1.1, 5.1, 6.1.2, 7.2.1, 7.3.1, 8.1, 9.1, 9.8.1, 15.1.1
Delays and Extensions of Time
3.2, **3.7.4**, 5.2.3, 7.2.1, 7.3.1, **7.4**, **8.3**, 9.5.1, **9.7**, 10.3.2, **10.4**, 14.3.2, **15.1.6**, 15.2.5
Digital Data Use and Transmission
1.7
Disputes
6.3, 7.3.9, 15.1, 15.2
Documents and Samples at the Site
3.11
Drawings, Definition of
1.1.5
Drawings and Specifications, Use and Ownership of
3.11
Effective Date of Insurance
8.2.2
Emergencies
10.4, 14.1.1.2, **15.1.5**
Employees, Contractor's
3.3.2, 3.4.3, 3.8.1, 3.9, 3.18.2, 4.2.3, 4.2.6, 10.2, 10.3.3, 11.3, 14.1, 14.2.1.1
Equipment, Labor, or Materials
1.1.3, 1.1.6, 3.4, 3.5, 3.8.2, 3.8.3, 3.12, 3.13, 3.15.1, 4.2.6, 4.2.7, 5.2.1, 6.2.1, 7.3.4, 9.3.2, 9.3.3, 9.5.1.3, 9.10.2, 10.2.1, 10.2.4, 14.2.1.1, 14.2.1.2
Execution and Progress of the Work
1.1.3, 1.2.1, 1.2.2, 2.3.4, 2.3.6, 3.1, 3.3.1, 3.4.1, 3.7.1, 3.10.1, 3.12, 3.14, 4.2, 6.2.2, 7.1.3, 7.3.6, 8.2, 9.5.1, 9.9.1, 10.2, 10.3, 12.1, 12.2, 14.2, 14.3.1, 15.1.4

AIA Document A201® – 2017. Copyright © 1911, 1915, 1918, 1925, 1937, 1951, 1958, 1961, 1963, 1966, 1970, 1976, 1987, 1997, 2007 and 2017 by The American Institute of Architects. All rights reserved. The "American Institute of Architects," "AIA," the AIA Logo, "A201," and "AIA Contract Documents" are registered trademarks and may not be used without permission. This document was produced by AIA software at 11:08:54 ET on 03/18/2022 under Order No.2114262975 which expires on 12/03/2022, is not for resale, is licensed for one-time use only, and may only be used in accordance with the AIA Contract Documents® Terms of Service. To report copyright violations, e-mail copyright@aia.org.
User Notes: (944467505)

Extensions of Time
3.2.4, 3.7.4, 5.2.3, 7.2.1, 7.3, 7.4, 9.5.1, 9.7, 10.3.2, 10.4, 14.3, 15.1.6, **15.2.5**
Failure of Payment
9.5.1.3, **9.7**, 9.10.2, 13.5, 14.1.1.3, 14.2.1.2
Faulty Work
(See Defective or Nonconforming Work)
Final Completion and Final Payment
4.2.1, 4.2.9, 9.8.2, **9.10**, 12.3, 14.2.4, 14.4.3
Financial Arrangements, Owner's
2.2.1, 13.2.2, 14.1.1.4
GENERAL PROVISIONS
1
Governing Law
13.1
Guarantees (See Warranty)
Hazardous Materials and Substances
10.2.4, **10.3**
Identification of Subcontractors and Suppliers
5.2.1
Indemnification
3.17, **3.18**, 9.6.8, 9.10.2, 10.3.3, 11.3
Information and Services Required of the Owner
2.1.2, **2.2**, 2.3, 3.2.2, 3.12.10.1, 6.1.3, 6.1.4, 6.2.5, 9.6.1, 9.9.2, 9.10.3, 10.3.3, 11.2, 13.4.1, 13.4.2, 14.1.1.4, 14.1.4, 15.1.4
Initial Decision
15.2
Initial Decision Maker, Definition of
1.1.8
Initial Decision Maker, Decisions
14.2.4, 15.1.4.2, 15.2.1, 15.2.2, 15.2.3, 15.2.4, 15.2.5
Initial Decision Maker, Extent of Authority
14.2.4, 15.1.4.2, 15.2.1, 15.2.2, 15.2.3, 15.2.4, 15.2.5
Injury or Damage to Person or Property
10.2.8, 10.4
Inspections
3.1.3, 3.3.3, 3.7.1, 4.2.2, 4.2.6, 4.2.9, 9.4.2, 9.8.3, 9.9.2, 9.10.1, 12.2.1, 13.4
Instructions to Bidders
1.1.1
Instructions to the Contractor
3.2.4, 3.3.1, 3.8.1, 5.2.1, 7, 8.2.2, 12, 13.4.2
Instruments of Service, Definition of
1.1.7
Insurance
6.1.1, 7.3.4, 8.2.2, 9.3.2, 9.8.4, 9.9.1, 9.10.2, 10.2.5, **11**
Insurance, Notice of Cancellation or Expiration
11.1.4, 11.2.3
Insurance, Contractor's Liability
11.1
Insurance, Effective Date of
8.2.2, 14.4.2
Insurance, Owner's Liability
11.2
Insurance, Property
10.2.5, 11.2, 11.4, 11.5
Insurance, Stored Materials
9.3.2
INSURANCE AND BONDS
11
Insurance Companies, Consent to Partial Occupancy
9.9.1
Insured loss, Adjustment and Settlement of
11.5
Intent of the Contract Documents
1.2.1, 4.2.7, 4.2.12, 4.2.13
Interest
13.5
Interpretation
1.1.8, 1.2.3, **1.4**, 4.1.1, 5.1, 6.1.2, 15.1.1
Interpretations, Written
4.2.11, 4.2.12
Judgment on Final Award
15.4.2
Labor and Materials, Equipment
1.1.3, 1.1.6, **3.4**, 3.5, 3.8.2, 3.8.3, 3.12, 3.13, 3.15.1, 5.2.1, 6.2.1, 7.3.4, 9.3.2, 9.3.3, 9.5.1.3, 9.10.2, 10.2.1, 10.2.4, 14.2.1.1, 14.2.1.2
Labor Disputes
8.3.1
Laws and Regulations
1.5, 2.3.2, 3.2.3, 3.2.4, 3.6, 3.7, 3.12.10, 3.13, 9.6.4, 9.9.1, 10.2.2, 13.1, 13.3.1, 13.4.2, 13.5, 14, 15.2.8, 15.4
Liens
2.1.2, 9.3.1, 9.3.3, 9.6.8, 9.10.2, 9.10.4, 15.2.8
Limitations, Statutes of
12.2.5, 15.1.2, 15.4.1.1
Limitations of Liability
3.2.2, 3.5, 3.12.10, 3.12.10.1, 3.17, 3.18.1, 4.2.6, 4.2.7, 6.2.2, 9.4.2, 9.6.4, 9.6.7, 9.6.8, 10.2.5, 10.3.3, 11.3, 12.2.5, 13.3.1
Limitations of Time
2.1.2, 2.2, 2.5, 3.2.2, 3.10, 3.11, 3.12.5, 3.15.1, 4.2.7, 5.2, 5.3, 5.4.1, 6.2.4, 7.3, 7.4, 8.2, 9.2, 9.3.1, 9.3.3, 9.4.1, 9.5, 9.6, 9.7, 9.8, 9.9, 9.10, 12.2, 13.4, 14, 15, 15.1.2, 15.1.3, 15.1.5
Materials, Hazardous
10.2.4, **10.3**
Materials, Labor, Equipment and
1.1.3, 1.1.6, 3.4.1, 3.5, 3.8.2, 3.8.3, 3.12, 3.13, 3.15.1, 5.2.1, 6.2.1, 7.3.4, 9.3.2, 9.3.3, 9.5.1.3, 9.10.2, 10.2.1.2, 10.2.4, 14.2.1.1, 14.2.1.2
Means, Methods, Techniques, Sequences and Procedures of Construction
3.3.1, 3.12.10, 4.2.2, 4.2.7, 9.4.2
Mechanic's Lien
2.1.2, 9.3.1, 9.3.3, 9.6.8, 9.10.2, 9.10.4, 15.2.8
Mediation
8.3.1, 15.1.3.2, 15.2.1, 15.2.5, 15.2.6, **15.3**, 15.4.1, 15.4.1.1
Minor Changes in the Work
1.1.1, 3.4.2, 3.12.8, 4.2.8, 7.1, **7.4**

AIA Document A201® – 2017. Copyright © 1911, 1915, 1918, 1925, 1937, 1951, 1958, 1961, 1963, 1966, 1970, 1976, 1987, 1997, 2007 and 2017 by The American Institute of Architects. All rights reserved. The "American Institute of Architects," "AIA," the AIA Logo, "A201," and "AIA Contract Documents" are registered trademarks and may not be used without permission. This document was produced by AIA software at 11:08:54 ET on 03/18/2022 under Order No.2114262975 which expires on 12/03/2022, is not for resale, is licensed for one-time use only, and may only be used in accordance with the AIA Contract Documents® Terms of Service. To report copyright violations, e-mail copyright@aia.org.
User Notes: (944467505)

MISCELLANEOUS PROVISIONS
13
Modifications, Definition of
1.1.1
Modifications to the Contract
1.1.1, 1.1.2, 2.5, 3.11, 4.1.2, 4.2.1, 5.2.3, 7, 8.3.1, 9.7, 10.3.2
Mutual Responsibility
6.2
Nonconforming Work, Acceptance of
9.6.6, 9.9.3, **12.3**
Nonconforming Work, Rejection and Correction of
2.4, 2.5, 3.5, 4.2.6, 6.2.4, 9.5.1, 9.8.2, 9.9.3, 9.10.4, 12.2
Notice
1.6, 1.6.1, 1.6.2, 2.1.2, 2.2.2., 2.2.3, 2.2.4, 2.5, 3.2.4, 3.3.1, 3.7.4, 3.7.5, 3.9.2, 3.12.9, 3.12.10, 5.2.1, 7.4, 8.2.2 9.6.8, 9.7, 9.10.1, 10.2.8, 10.3.2, 11.5, 12.2.2.1, 13.4.1, 13.4.2, 14.1, 14.2.2, 14.4.2, 15.1.3, 15.1.5, 15.1.6, 15.4.1
Notice of Cancellation or Expiration of Insurance
11.1.4, 11.2.3
Notice of Claims
1.6.2, 2.1.2, 3.7.4, 9.6.8, 10.2.8, **15.1.3**, 15.1.5, 15.1.6, 15.2.8, 15.3.2, 15.4.1
Notice of Testing and Inspections
13.4.1, 13.4.2
Observations, Contractor's
3.2, 3.7.4
Occupancy
2.3.1, 9.6.6, 9.8
Orders, Written
1.1.1, 2.4, 3.9.2, 7, 8.2.2, 11.5, 12.1, 12.2.2.1, 13.4.2, 14.3.1
OWNER
2
Owner, Definition of
2.1.1
Owner, Evidence of Financial Arrangements
2.2, 13.2.2, 14.1.1.4
Owner, Information and Services Required of the
2.1.2, **2.2**, 2.3, 3.2.2, 3.12.10, 6.1.3, 6.1.4, 6.2.5, 9.3.2, 9.6.1, 9.6.4, 9.9.2, 9.10.3, 10.3.3, 11.2, 13.4.1, 13.4.2, 14.1.1.4, 14.1.4, 15.1.4
Owner's Authority
1.5, 2.1.1, 2.3.32.4, 2.5, 3.4.2, 3.8.1, 3.12.10, 3.14.2, 4.1.2, 4.2.4, 4.2.9, 5.2.1, 5.2.4, 5.4.1, 6.1, 6.3, 7.2.1, 7.3.1, 8.2.2, 8.3.1, 9.3.2, 9.5.1, 9.6.4, 9.9.1, 9.10.2, 10.3.2, 11.4, 11.5, 12.2.2, 12.3, 13.2.2, 14.3, 14.4, 15.2.7
Owner's Insurance
11.2
Owner's Relationship with Subcontractors
1.1.2, 5.2, 5.3, 5.4, 9.6.4, 9.10.2, 14.2.2
Owner's Right to Carry Out the Work
2.5, 14.2.2
Owner's Right to Clean Up
6.3
Owner's Right to Perform Construction and to Award Separate Contracts
6.1
Owner's Right to Stop the Work
2.4
Owner's Right to Suspend the Work
14.3
Owner's Right to Terminate the Contract
14.2, 14.4
Ownership and Use of Drawings, Specifications and Other Instruments of Service
1.1.1, 1.1.6, 1.1.7, **1.5**, 2.3.6, 3.2.2, 3.11, 3.17, 4.2.12, 5.3
Partial Occupancy or Use
9.6.6, **9.9**
Patching, Cutting and
3.14, 6.2.5
Patents
3.17
Payment, Applications for
4.2.5, 7.3.9, 9.2, **9.3**, 9.4, 9.5, 9.6.3, 9.7, 9.8.5, 9.10.1, 14.2.3, 14.2.4, 14.4.3
Payment, Certificates for
4.2.5, 4.2.9, 9.3.3, **9.4**, 9.5, 9.6.1, 9.6.6, 9.7, 9.10.1, 9.10.3, 14.1.1.3, 14.2.4
Payment, Failure of
9.5.1.3, **9.7**, 9.10.2, 13.5, 14.1.1.3, 14.2.1.2
Payment, Final
4.2.1, 4.2.9, **9.10**, 12.3, 14.2.4, 14.4.3
Payment Bond, Performance Bond and
7.3.4.4, 9.6.7, 9.10.3, **11.1.2**
Payments, Progress
9.3, **9.6**, 9.8.5, 9.10.3, 14.2.3, 15.1.4
PAYMENTS AND COMPLETION
9
Payments to Subcontractors
5.4.2, 9.5.1.3, 9.6.2, 9.6.3, 9.6.4, 9.6.7, 14.2.1.2
PCB
10.3.1
Performance Bond and Payment Bond
7.3.4.4, 9.6.7, 9.10.3, **11.1.2**
Permits, Fees, Notices and Compliance with Laws
2.3.1, **3.7**, 3.13, 7.3.4.4, 10.2.2
PERSONS AND PROPERTY, PROTECTION OF
10
Polychlorinated Biphenyl
10.3.1
Product Data, Definition of
3.12.2
Product Data and Samples, Shop Drawings
3.11, **3.12**, 4.2.7
Progress and Completion
4.2.2, **8.2**, 9.8, 9.9.1, 14.1.4, 15.1.4
Progress Payments
9.3, **9.6**, 9.8.5, 9.10.3, 14.2.3, 15.1.4

AIA Document A201® – 2017. Copyright © 1911, 1915, 1918, 1925, 1937, 1951, 1958, 1961, 1963, 1966, 1970, 1976, 1987, 1997, 2007 and 2017 by The American Institute of Architects. All rights reserved. The "American Institute of Architects," "AIA," the AIA Logo, "A201," and "AIA Contract Documents" are registered trademarks and may not be used without permission. This document was produced by AIA software at 11:08:54 ET on 03/18/2022 under Order No.2114262975 which expires on 12/03/2022, is not for resale, is licensed for one-time use only, and may only be used in accordance with the AIA Contract Documents® Terms of Service. To report copyright violations, e-mail copyright@aia.org.
User Notes: (944467505)

Project, Definition of
1.1.4
Project Representatives
4.2.10
Property Insurance
10.2.5, **11.2**
Proposal Requirements
1.1.1
PROTECTION OF PERSONS AND PROPERTY
10
Regulations and Laws
1.5, 2.3.2, 3.2.3, 3.6, 3.7, 3.12.10, 3.13, 9.6.4, 9.9.1, 10.2.2, 13.1, 13.3, 13.4.1, 13.4.2, 13.5, 14, 15.2.8, 15.4
Rejection of Work
4.2.6, 12.2.1
Releases and Waivers of Liens
9.3.1, 9.10.2
Representations
3.2.1, 3.5, 3.12.6, 8.2.1, 9.3.3, 9.4.2, 9.5.1, 9.10.1
Representatives
2.1.1, 3.1.1, 3.9, 4.1.1, 4.2.10, 13.2.1
Responsibility for Those Performing the Work
3.3.2, 3.18, 4.2.2, 4.2.3, 5.3, 6.1.3, 6.2, 6.3, 9.5.1, 10
Retainage
9.3.1, 9.6.2, 9.8.5, 9.9.1, 9.10.2, 9.10.3
Review of Contract Documents and Field Conditions by Contractor
3.2, 3.12.7, 6.1.3
Review of Contractor's Submittals by Owner and Architect
3.10.1, 3.10.2, 3.11, 3.12, 4.2, 5.2, 6.1.3, 9.2, 9.8.2
Review of Shop Drawings, Product Data and Samples by Contractor
3.12
Rights and Remedies
1.1.2, 2.4, 2.5, 3.5, 3.7.4, 3.15.2, 4.2.6, 5.3, 5.4, 6.1, 6.3, 7.3.1, 8.3, 9.5.1, 9.7, 10.2.5, 10.3, 12.2.1, 12.2.2, 12.2.4, **13.3**, 14, 15.4
Royalties, Patents and Copyrights
3.17
Rules and Notices for Arbitration
15.4.1
Safety of Persons and Property
10.2, 10.4
Safety Precautions and Programs
3.3.1, 4.2.2, 4.2.7, 5.3, **10.1**, 10.2, 10.4
Samples, Definition of
3.12.3
Samples, Shop Drawings, Product Data and
3.11, **3.12**, 4.2.7
Samples at the Site, Documents and
3.11
Schedule of Values
9.2, 9.3.1
Schedules, Construction
3.10, 3.12.1, 3.12.2, 6.1.3, 15.1.6.2
Separate Contracts and Contractors
1.1.4, 3.12.5, 3.14.2, 4.2.4, 4.2.7, 6, 8.3.1, 12.1.2
Separate Contractors, Definition of
6.1.1
Shop Drawings, Definition of
3.12.1
Shop Drawings, Product Data and Samples
3.11, **3.12**, 4.2.7
Site, Use of
3.13, 6.1.1, 6.2.1
Site Inspections
3.2.2, 3.3.3, 3.7.1, 3.7.4, 4.2, 9.9.2, 9.4.2, 9.10.1, 13.4
Site Visits, Architect's
3.7.4, 4.2.2, 4.2.9, 9.4.2, 9.5.1, 9.9.2, 9.10.1, 13.4
Special Inspections and Testing
4.2.6, 12.2.1, 13.4
Specifications, Definition of
1.1.6
Specifications
1.1.1, **1.1.6**, 1.2.2, 1.5, 3.12.10, 3.17, 4.2.14
Statute of Limitations
15.1.2, 15.4.1.1
Stopping the Work
2.2.2, 2.4, 9.7, 10.3, 14.1
Stored Materials
6.2.1, 9.3.2, 10.2.1.2, 10.2.4
Subcontractor, Definition of
5.1.1
SUBCONTRACTORS
5
Subcontractors, Work by
1.2.2, 3.3.2, 3.12.1, 3.18, 4.2.3, 5.2.3, 5.3, 5.4, 9.3.1.2, 9.6.7
Subcontractual Relations
5.3, 5.4, 9.3.1.2, 9.6, 9.10, 10.2.1, 14.1, 14.2.1
Submittals
3.10, 3.11, 3.12, 4.2.7, 5.2.1, 5.2.3, 7.3.4, 9.2, 9.3, 9.8, 9.9.1, 9.10.2, 9.10.3
Submittal Schedule
3.10.2, 3.12.5, 4.2.7
Subrogation, Waivers of
6.1.1, **11.3**
Substances, Hazardous
10.3
Substantial Completion
4.2.9, 8.1.1, 8.1.3, 8.2.3, 9.4.2, **9.8**, 9.9.1, 9.10.3, 12.2, 15.1.2
Substantial Completion, Definition of
9.8.1
Substitution of Subcontractors
5.2.3, 5.2.4
Substitution of Architect
2.3.3
Substitutions of Materials
3.4.2, 3.5, 7.3.8
Sub-subcontractor, Definition of
5.1.2

AIA Document A201® – 2017. Copyright © 1911, 1915, 1918, 1925, 1937, 1951, 1958, 1961, 1963, 1966, 1970, 1976, 1987, 1997, 2007 and 2017 by The American Institute of Architects. All rights reserved. The "American Institute of Architects," "AIA," the AIA Logo, "A201," and "AIA Contract Documents" are registered trademarks and may not be used without permission. This document was produced by AIA software at 11:08:54 ET on 03/18/2022 under Order No.2114262975 which expires on 12/03/2022, is not for resale, is licensed for one-time use only, and may only be used in accordance with the AIA Contract Documents® Terms of Service. To report copyright violations, e-mail copyright@aia.org.
User Notes: (944467505)

Subsurface Conditions
3.7.4
Successors and Assigns
13.2
Superintendent
3.9, 10.2.6
Supervision and Construction Procedures
1.2.2, **3.3**, 3.4, 3.12.10, 4.2.2, 4.2.7, 6.1.3, 6.2.4, 7.1.3, 7.3.4, 8.2, 8.3.1, 9.4.2, 10, 12, 14, 15.1.4
Suppliers
1.5, 3.12.1, 4.2.4, 4.2.6, 5.2.1, 9.3, 9.4.2, 9.5.4, 9.6, 9.10.5, 14.2.1
Surety
5.4.1.2, 9.6.8, 9.8.5, 9.10.2, 9.10.3, 11.1.2, 14.2.2, 15.2.7
Surety, Consent of
9.8.5, 9.10.2, 9.10.3
Surveys
1.1.7, 2.3.4
Suspension by the Owner for Convenience
14.3
Suspension of the Work
3.7.5, 5.4.2, 14.3
Suspension or Termination of the Contract
5.4.1.1, 14
Taxes
3.6, 3.8.2.1, 7.3.4.4
Termination by the Contractor
14.1, 15.1.7
Termination by the Owner for Cause
5.4.1.1, **14.2,** 15.1.7
Termination by the Owner for Convenience
14.4
Termination of the Architect
2.3.3
Termination of the Contractor Employment
14.2.2

TERMINATION OR SUSPENSION OF THE CONTRACT
14
Tests and Inspections
3.1.3, 3.3.3, 3.7.1, 4.2.2, 4.2.6, 4.2.9, 9.4.2, 9.8.3, 9.9.2, 9.10.1, 10.3.2, 12.2.1, **13.4**
TIME
8
Time, Delays and Extensions of
3.2.4, 3.7.4, 5.2.3, 7.2.1, 7.3.1, 7.4, **8.3**, 9.5.1, 9.7, 10.3.2, 10.4, 14.3.2, 15.1.6, 15.2.5
Time Limits
2.1.2, 2.2, 2.5, 3.2.2, 3.10, 3.11, 3.12.5, 3.15.1, 4.2, 5.2, 5.3, 5.4, 6.2.4, 7.3, 7.4, 8.2, 9.2, 9.3.1, 9.3.3, 9.4.1, 9.5, 9.6, 9.7, 9.8, 9.9, 9.10, 12.2, 13.4, 14, 15.1.2, 15.1.3, 15.4
Time Limits on Claims
3.7.4, 10.2.8, 15.1.2, 15.1.3
Title to Work
9.3.2, 9.3.3
UNCOVERING AND CORRECTION OF WORK
12
Uncovering of Work
12.1
Unforeseen Conditions, Concealed or Unknown
3.7.4, 8.3.1, 10.3
Unit Prices
7.3.3.2, 9.1.2
Use of Documents
1.1.1, 1.5, 2.3.6, 3.12.6, 5.3
Use of Site
3.13, 6.1.1, 6.2.1
Values, Schedule of
9.2, 9.3.1
Waiver of Claims by the Architect
13.3.2
Waiver of Claims by the Contractor
9.10.5, 13.3.2, **15.1.7**
Waiver of Claims by the Owner
9.9.3, 9.10.3, 9.10.4, 12.2.2.1, 13.3.2, 14.2.4, **15.1.7**
Waiver of Consequential Damages
14.2.4, 15.1.7
Waiver of Liens
9.3, 9.10.2, 9.10.4
Waivers of Subrogation
6.1.1, **11.3**
Warranty
3.5, 4.2.9, 9.3.3, 9.8.4, 9.9.1, 9.10.2, 9.10.4, 12.2.2, 15.1.2
Weather Delays
8.3, 15.1.6.2
Work, Definition of
1.1.3
Written Consent
1.5.2, 3.4.2, 3.7.4, 3.12.8, 3.14.2, 4.1.2, 9.3.2, 9.10.3, 13.2, 13.3.2, 15.4.4.2
Written Interpretations
4.2.11, 4.2.12
Written Orders
1.1.1, 2.4, 3.9, 7, 8.2.2, 12.1, 12.2, 13.4.2, 14.3.1

AIA Document A201® – 2017. Copyright © 1911, 1915, 1918, 1925, 1937, 1951, 1958, 1961, 1963, 1966, 1970, 1976, 1987, 1997, 2007 and 2017 by The American Institute of Architects. All rights reserved. The "American Institute of Architects," "AIA," the AIA Logo, "A201," and "AIA Contract Documents" are registered trademarks and may not be used without permission. This document was produced by AIA software at 11:08:54 ET on 03/18/2022 under Order No.2114262975 which expires on 12/03/2022, is not for resale, is licensed for one-time use only, and may only be used in accordance with the AIA Contract Documents® Terms of Service. To report copyright violations, e-mail copyright@aia.org.
User Notes: (944467505)

ARTICLE 1 GENERAL PROVISIONS

§ 1.1 Basic Definitions

§ 1.1.1 The Contract Documents

The Contract Documents consist of this Agreement, Conditions of the Contract (General, Supplementary, and other Conditions), Drawings, Specifications, and Addenda issued prior to the receipt of public bids pursuant to the Local Public Contracts Law. Further, the Contract Documents include advertisement or invitation to bid, Instructions to Bidders, sample forms, other information furnished by the Owner in anticipation of receiving bids or proposals, the Contractor's bid or proposal, or portions of Addenda relating to bidding or proposal requirements. All of the foregoing shall form the Contract, and are as fully a part of the Contract as if attached to this Agreement or repeated herein. The Contract represents the entire and integrated agreement between the parties hereto and supersedes prior negotiations, representations, or agreements, either written or oral. Change Orders, Construction Directives, sketches, amended drawings / specifications, and responses to RFI's issued to the Contractor after a Notice to Proceed shall also become part of the Contract Documents.

§ 1.1.2 The Contract

The Contract Documents form the Contract for Construction. The Contract represents the entire and integrated agreement between the parties hereto and supersedes prior negotiations, representations, or agreements, either written or oral. The Contract may be amended or modified only by a Modification. The Contract Documents shall not be construed to create a contractual relationship of any kind (1) between the Contractor and the Architect or the Architect's consultants, (2) between the Owner and a Subcontractor or a Sub-subcontractor, (3) between the Owner and the Architect or the Architect's consultants, or (4) between any persons or entities other than the Owner and the Contractor. The Architect shall, however, be entitled to performance and enforcement of obligations under the Contract intended to facilitate performance of the Architect's duties.

§ 1.1.3 The Work

The term "Work" means the construction and services required by the Contract Documents, whether completed or partially completed, and includes all other labor, materials, equipment, and services provided or to be provided by the Contractor to fulfill the Contractor's obligations. The Work may constitute the whole or a part of the Project.

§ 1.1.4 The Project

The Project is the total construction of which the Work performed under the Contract Documents may be the whole or a part and which may include construction by the Owner and by Separate Contractors.

§ 1.1.5 The Drawings

The Drawings are the graphic and pictorial portions of the Contract Documents showing the design, location and dimensions of the Work, generally including plans, elevations, sections, details, schedules, and diagrams.

§ 1.1.6 The Specifications

The Specifications are that portion of the Contract Documents consisting of the written requirements for materials, equipment, systems, standards and workmanship for the Work, and performance of related services.

§ 1.1.7 Instruments of Service

Instruments of Service are representations, in any medium of expression now known or later developed, of the tangible and intangible creative work performed by the Architect and the Architect's consultants under their respective professional services agreements. Instruments of Service may include, without limitation, studies, surveys, models, sketches, drawings, specifications, and other similar materials.

§ 1.1.8 Initial Decision Maker

The Initial Decision Maker shall be the Architect who shall render initial decisions on Claims in accordance with Section 15.2. The Initial Decision Maker shall not show partiality to the Owner or Contractor and shall not be liable for results of interpretations or decisions rendered in good faith.

§ 1.2 Correlation and Intent of the Contract Documents

§ 1.2.1 The intent of the Contract Documents is to include all items necessary for the proper execution and completion of the Work by the Contractor. The Contract Documents are complementary, and what is required by one shall be as binding as if required by all; performance by the Contractor shall be required only to the extent consistent with the Contract Documents and reasonably inferable from them as being necessary to produce the indicated results. It shall

AIA Document A201® – 2017. Copyright © 1911, 1915, 1918, 1925, 1937, 1951, 1958, 1961, 1963, 1966, 1970, 1976, 1987, 1997, 2007 and 2017 by The American Institute of Architects. All rights reserved. The "American Institute of Architects," "AIA," the AIA Logo, "A201," and "AIA Contract Documents" are registered trademarks and may not be used without permission. This document was produced by AIA software at 11:08:54 ET on 03/18/2022 under Order No.2114262975 which expires on 12/03/2022, is not for resale, is licensed for one-time use only, and may only be used in accordance with the AIA Contract Documents® Terms of Service. To report copyright violations, e-mail copyright@aia.org.
User Notes: (944467505)

be the Contractor's obligation to provide each of its subcontractor's with all drawings to ensure full coordination between the various drawing disciplines.

§ 1.2.1.1 The invalidity of any provision of the Contract Documents shall not invalidate the Contract or its remaining provisions. If it is determined that any provision of the Contract Documents violates any law, or is otherwise invalid or unenforceable, then that provision shall be revised to the extent necessary to make that provision legal and enforceable. In such case the Contract Documents shall be construed, to the fullest extent permitted by law, to give effect to the parties' intentions and purposes in executing the Contract.

§ 1.2.2 Organization of the Specifications into divisions, sections and articles, and arrangement of Drawings shall not control the Contractor in dividing the Work among Subcontractors or in establishing the extent of Work to be performed by any trade.

§ 1.2.3 Unless otherwise stated in the Contract Documents, words that have well-known technical or construction industry meanings are used in the Contract Documents in accordance with such recognized meanings.

§ 1.3 Capitalization

Terms capitalized in these General Conditions include those that are (1) specifically defined, (2) the titles of numbered articles, or (3) the titles of other documents published by the American Institute of Architects.

§ 1.4 Interpretation

In the interest of brevity the Contract Documents frequently omit modifying words such as "all" and "any" and articles such as "the" and "an," but the fact that a modifier or an article is absent from one statement and appears in another is not intended to affect the interpretation of either statement.

§ 1.5 Ownership and Use of Drawings, Specifications, and Other Instruments of Service

§ 1.5.1 The Architect and the Architect's consultants shall be deemed the authors and owners of their respective Instruments of Service, including the Drawings and Specifications, and retain all common law, statutory, and other reserved rights in their Instruments of Service, including copyrights. The Contractor, Subcontractors, Sub-subcontractors, and suppliers shall not own or claim a copyright in the Instruments of Service. Submittal or distribution to meet official regulatory requirements or for other purposes in connection with the Project is not to be construed as publication in derogation of the Architect's or Architect's consultants' reserved rights.

§ 1.5.2 The Contractor, Subcontractors, Sub-subcontractors, and suppliers are authorized to use and reproduce the Instruments of Service provided to them, subject to any protocols established pursuant to Sections 1.7 and 1.8, solely and exclusively for execution of the Work. All copies made under this authorization shall bear the copyright notice, if any, shown on the Instruments of Service. The Contractor, Subcontractors, Sub-subcontractors, and suppliers may not use the Instruments of Service on other projects or for additions to the Project outside the scope of the Work without the specific written consent of the Owner, Architect, and the Architect's consultants.

§ 1.6 Notice

§ 1.6.1 Except as otherwise provided in Section 1.6.2, where the Contract Documents require one party to notify or give notice to the other party, such notice shall be provided in writing to the designated representative of the party to whom the notice is addressed and shall be deemed to have been duly served if delivered in person, by mail, by courier, or by electronic transmission if a method for electronic transmission is set forth in the Agreement.

§ 1.6.2 Notice of Claims as provided in Section 15.1.3 shall be provided in writing and shall be deemed to have been duly served only if delivered to the designated representative of the party to whom the notice is addressed by certified or registered mail, or by courier providing proof of delivery.

§ 1.7 Digital Data Use and Transmission

AIA Document E203™–2013, Building Information Modeling and Digital Data Exhibit shall establish the protocols for the development, use, transmission, and exchange of digital data.

AIA Document A201® – 2017. Copyright © 1911, 1915, 1918, 1925, 1937, 1951, 1958, 1961, 1963, 1966, 1970, 1976, 1987, 1997, 2007 and 2017 by The American Institute of Architects. All rights reserved. The "American Institute of Architects," "AIA," the AIA Logo, "A201," and "AIA Contract Documents" are registered trademarks and may not be used without permission. This document was produced by AIA software at 11:08:54 ET on 03/18/2022 under Order No.2114262975 which expires on 12/03/2022, is not for resale, is licensed for one-time use only, and may only be used in accordance with the AIA Contract Documents® Terms of Service. To report copyright violations, e-mail copyright@aia.org.
User Notes: (944467505)

§ 1.8 Building Information Models Use and Reliance
Any use of, or reliance on, all or a portion of a building information model shall be at the using or relying party's sole risk and without liability to the other party and its contractors or consultants, the authors of, or contributors to, the building information model, and each of their agents and employees.

ARTICLE 2 OWNER

§ 2.1 General
§ 2.1.1 The Owner is the person or entity identified as such in the Agreement and is referred to throughout the Contract Documents as if singular in number. The Owner shall designate in writing a representative who shall have express authority to bind the Owner with respect to all matters requiring the Owner's approval or authorization. The foregoing is subject to applicable statutory requirements as related to the Owner approval or authorization for matters related construction cost increases. Except as otherwise provided in Section 4.2.1, the Architect does not have such authority. The term "Owner" means the Owner or the Owner's authorized representative.

§ 2.1.2 The Owner shall furnish to the Contractor, within fifteen days after receipt of a written request, information necessary and relevant for the Contractor to evaluate, give notice of, or enforce mechanic's lien rights. Such information shall include a correct statement of the record legal title to the property on which the Project is located, usually referred to as the site, and the Owner's interest therein.

§ 2.2 Evidence of the Owner's Financial Arrangements
§ 2.2.1 Prior to commencement of the Work and upon written request by the Contractor, the Owner shall furnish to the Contractor reasonable evidence that the Owner has made financial arrangements to fulfill the Owner's obligations under the Contract. The Contractor shall have no obligation to commence the Work until the Owner provides such evidence. If commencement of the Work is delayed under this Section 2.2.1, the Contract Time shall be extended appropriately.

§ 2.2.2 Following commencement of the Work and upon written request by the Contractor, the Owner shall furnish to the Contractor reasonable evidence that the Owner has made financial arrangements to fulfill the Owner's obligations under the Contract only if (1) the Owner fails to make payments to the Contractor as the Contract Documents require; (2) the Contractor identifies in writing a reasonable concern regarding the Owner's ability to make payment when due; or (3) a change in the Work materially changes the Contract Sum. If the Owner fails to provide such evidence, as required, within fourteen days of the Contractor's request, the Contractor may immediately stop the Work and, in that event, shall notify the Owner that the Work has stopped. However, if the request is made because a change in the Work materially changes the Contract Sum under (3) above, the Contractor may immediately stop only that portion of the Work affected by the change until reasonable evidence is provided. If the Work is stopped under this Section 2.2.2, the Contract Time shall be extended appropriately and the Contract Sum shall be increased by the amount of the Contractor's reasonable costs of shutdown, delay and start-up, plus interest as provided in the Contract Documents.

§ 2.2.3 After the Owner furnishes evidence of financial arrangements under this Section 2.2, the Owner shall not materially vary such financial arrangements without prior notice to the Contractor.

§ 2.2.4 Where the Owner has designated information furnished under this Section 2.2 as "confidential," the Contractor shall keep the information confidential and shall not disclose it to any other person. However, the Contractor may disclose "confidential" information, after seven (7) days' notice to the Owner, where disclosure is required by law, including a subpoena or other form of compulsory legal process issued by a court or governmental entity, or by court or arbitrator(s) order. The Contractor may also disclose "confidential" information to its employees, consultants, sureties, Subcontractors and their employees, Sub-subcontractors, and others who need to know the content of such information solely and exclusively for the Project and who agree to maintain the confidentiality of such information.

§ 2.3 Information and Services Required of the Owner
§ 2.3.1 Owner shall secure and pay for any necessary permits or approvals, which are not the responsibility of the Contractor under the Contract Documents, including those required under Section 3.7.1.
§ 2.3.2 The Owner shall retain an architect lawfully licensed to practice architecture, or an entity lawfully practicing architecture, in the jurisdiction where the Project is located. That person or entity is identified as the Architect in the Agreement and is referred to throughout the Contract Documents as if singular in number.

AIA Document A201® – 2017. Copyright © 1911, 1915, 1918, 1925, 1937, 1951, 1958, 1961, 1963, 1966, 1970, 1976, 1987, 1997, 2007 and 2017 by The American Institute of Architects. All rights reserved. The "American Institute of Architects," "AIA," the AIA Logo, "A201," and "AIA Contract Documents" are registered trademarks and may not be used without permission. This document was produced by AIA software at 11:08:54 ET on 03/18/2022 under Order No.2114262975 which expires on 12/03/2022, is not for resale, is licensed for one-time use only, and may only be used in accordance with the AIA Contract Documents® Terms of Service. To report copyright violations, e-mail copyright@aia.org.
User Notes: (944467505)

§ 2.3.3 If the employment of the Architect terminates, the Owner shall employ an Owner's Representative and whose status under the Contract Documents shall be that of the Architect.

§ 2.3.4 The Contractor shall be entitled to rely on the accuracy of information furnished by the Owner except expressly stated to the contrary at the time of transmittal from Owner and / or Architect to Contractor. Contractor shall exercise proper precautions relating to the safe performance of the Work.

§ 2.3.5 The Owner shall furnish information or services required of the Owner by the Contract Documents with reasonable promptness. The Owner shall also furnish any other information or services under the Owner's control and relevant to the Contractor's performance of the Work with reasonable promptness after receiving the Contractor's written request for such information or services.

§ 2.3.6 Unless otherwise provided in the Contract Documents, the Owner shall furnish to the Contractor one copy of the Contract Documents for purposes of making reproductions pursuant to Section 1.5.2.

§ 2.4 Owner's Right to Stop the Work

If the Contractor fails to correct Work that is not in accordance with the requirements of the Contract Documents as required by Section 12.2 or repeatedly fails to carry out Work in accordance with the Contract Documents, the Owner may issue a written order to the Contractor to stop the Work, or any portion thereof, until the cause for such order has been eliminated; however, the right of the Owner to stop the Work shall not give rise to a duty on the part of the Owner to exercise this right for the benefit of the Contractor or any other person or entity, except to the extent required by Section 6.1.3.

§ 2.5 Owner's Right to Carry Out the Work

If the Contractor defaults or neglects to carry out the Work in accordance with the Contract Documents and fails within a ten-day period after receipt of notice from the Owner to commence and continue correction of such default or neglect with diligence and promptness, the Owner may, without prejudice to other remedies the Owner may have, correct such default or neglect. Such action by the Owner and amounts charged to the Contractor are both subject to prior approval of the Architect and the Architect may, pursuant to Section 9.5.1, withhold or nullify a Certificate for Payment in whole or in part, to the extent reasonably necessary to reimburse the Owner for the reasonable cost of correcting such deficiencies, including Owner's expenses and compensation for the Architect's additional services made necessary by such default, neglect, or failure. If current and future payments are not sufficient to cover such amounts, the Contractor shall pay the difference to the Owner. If the Contractor disagrees with the actions of the Owner or the Architect, or the amounts claimed as costs to the Owner, the Contractor may file a Claim pursuant to Article 15.

ARTICLE 3 CONTRACTOR

§ 3.1 General

§ 3.1.1 The Contractor is the person or entity identified as such in the Agreement and is referred to throughout the Contract Documents as if singular in number. The Contractor shall be lawfully licensed, if required in the jurisdiction where the Project is located. The Contractor shall designate in writing a representative who shall have express authority to bind the Contractor with respect to all matters under this Contract. The term "Contractor" means the Contractor or the Contractor's authorized representative.

§ 3.1.2 The Contractor shall perform the Work in accordance with the Contract Documents.

§ 3.1.3 The Contractor shall not be relieved of its obligations to perform the Work in accordance with the Contract Documents either by activities or duties of the Architect in the Architect's administration of the Contract, or by tests, inspections or approvals required or performed by persons or entities other than the Contractor.

§ 3.2 Review of Contract Documents and Field Conditions by Contractor

§ 3.2.1 Submission of the public bid by the Contractor is a representation that the Contractor has visited the site, become generally familiar with local conditions under which the Work is to be performed, correlated personal observations with requirements of the Contract Documents, and submitted pre-bid Request for Information for any conflicting or missing information / data.

AIA Document A201® – 2017. Copyright © 1911, 1915, 1918, 1925, 1937, 1951, 1958, 1961, 1963, 1966, 1970, 1976, 1987, 1997, 2007 and 2017 by The American Institute of Architects. All rights reserved. The "American Institute of Architects," "AIA," the AIA Logo, "A201," and "AIA Contract Documents" are registered trademarks and may not be used without permission. This document was produced by AIA software at 11:08:54 ET on 03/18/2022 under Order No.2114262975 which expires on 12/03/2022, is not for resale, is licensed for one-time use only, and may only be used in accordance with the AIA Contract Documents® Terms of Service. To report copyright violations, e-mail copyright@aia.org.
User Notes: (944467505)

§ 3.2.2 Because the Contract Documents are complementary, the Contractor shall, before starting each portion of the Work, carefully study and compare the various Contract Documents relative to that portion of the Work, as well as the information furnished by the Owner pursuant to Section 2.3.4, shall take field measurements of any existing conditions related to that portion of the Work, and shall observe any conditions at the site affecting it. These obligations are for the purpose of facilitating coordination and construction by the Contractor and are not for the purpose of discovering errors, omissions, or inconsistencies in the Contract Documents; however, the Contractor shall promptly report to the Architect any believed to be errors, inconsistencies or omissions discovered by or made known to the Contractor as a request for information in such form as the Architect may require. It is recognized that the Contractor's review is made in the Contractor's capacity as a contractor and not as a licensed design professional, unless otherwise specifically provided in the Contract Documents.

§ 3.2.3 The Contractor is not required to ascertain that the Contract Documents are in accordance with applicable laws, statutes, ordinances, codes, rules and regulations, or lawful orders of public authorities, but the Contractor shall promptly report to the Architect any nonconformity discovered by or made known to the Contractor as a request for information in such form as the Architect may require.

§ 3.2.4 If the Contractor believes that additional cost or time is involved because of clarifications or instructions the Architect issues in response to the Contractor's notices or requests for information pursuant to Sections 3.2.2 or 3.2.3, the Contractor shall submit Claims as provided in Article 15. If the Contractor fails to perform the obligations of Sections 3.2.2 or 3.2.3, the Contractor shall pay such costs and damages to the Owner, subject to Section 15.1.7, as would have been avoided if the Contractor had performed such obligations. If the Contractor demonstrates that it has performed those obligations, the Contractor shall not be liable to the Owner or Architect for damages resulting from errors, inconsistencies or omissions in the Contract Documents, for differences between field measurements or conditions and the Contract Documents, or for nonconformities of the Contract Documents to applicable laws, statutes, ordinances, codes, rules and regulations, and lawful orders of public authorities.

§ 3.3 Supervision and Construction Procedures

§ 3.3.1 The Contractor shall supervise and direct the Work, using the Contractor's best skill and attention. If at any time, the project is behind the most recent Schedule provided by the Contractor and accepted by the Owner and the Architect, then, in that event, the Architect may request that the Contractor employ a full-time supervisor, at Contractor's cost, until the completion of the Work or until such time the Project is anticipated to be completed by the substantial completion date set forth in the Contract Documents or an amended Project Schedule, which was accepted by the Owner and the Architect. The Contractor shall be solely responsible for, and have control over, construction means, methods, techniques, sequences, and procedures, and for coordinating all portions of the Work under the Contract. If the Contract Documents give specific instructions concerning construction means, methods, techniques, sequences, or procedures, the Contractor shall evaluate the jobsite safety thereof and shall be solely responsible for the jobsite safety of such means, methods, techniques, sequences, or procedures may not be safe, the Contractor shall give timely notice to the Owner and Architect, and shall propose alternative means, methods, techniques, sequences, or procedures. The Architect shall evaluate the proposed alternative solely for conformance with the design intent for the completed construction. Unless the Architect objects to the Contractor's proposed alternative, the Contractor shall perform the Work using its alternative means, methods, techniques, sequences, or procedures.

§ 3.3.2 The Contractor shall be responsible to the Owner for acts and omissions of the Contractor's employees, Subcontractors and their agents and employees, and other persons or entities performing portions of the Work for, or on behalf of, the Contractor or any of its Subcontractors.

§ 3.3.3 The Contractor shall be responsible for inspection of portions of Work already performed to determine that such portions are in proper condition to receive subsequent Work.

§ 3.4 Labor and Materials

§ 3.4.1 Unless otherwise provided in the Contract Documents, the Contractor shall provide and pay for labor, materials, equipment, tools, construction equipment and machinery, water, heat, utilities, transportation, and other facilities and services necessary for proper execution and completion of the Work, whether temporary or permanent and whether or not incorporated or to be incorporated in the Work.

AIA Document A201® – 2017. Copyright © 1911, 1915, 1918, 1925, 1937, 1951, 1958, 1961, 1963, 1966, 1970, 1976, 1987, 1997, 2007 and 2017 by The American Institute of Architects. All rights reserved. The "American Institute of Architects," "AIA," the AIA Logo, "A201," and "AIA Contract Documents" are registered trademarks and may not be used without permission. This document was produced by AIA software at 11:08:54 ET on 03/18/2022 under Order No.2114262975 which expires on 12/03/2022, is not for resale, is licensed for one-time use only, and may only be used in accordance with the AIA Contract Documents® Terms of Service. To report copyright violations, e-mail copyright@aia.org.
User Notes: (944467505)

§ 3.4.2 The Contractor shall enforce strict discipline and good order among the Contractor's employees and other persons carrying out the Work. The Contractor shall not permit employment of unfit persons or persons not properly skilled in tasks assigned to them.

(Paragraph deleted)

§ 3.5 Warranty

§ 3.5.1 The Contractor warrants to the Owner and Architect that materials and equipment furnished under the Contract will be of good quality and new unless the Contract Documents require or permit otherwise. The Contractor further warrants that the Work will conform to the requirements of the Contract Documents and will be free from defects, except for those inherent in the quality of the Work the Contract Documents require or permit. Work, materials, or equipment not conforming to these requirements may be considered defective. The Contractor's warranty excludes remedy for damage or defect caused by abuse, alterations to the Work not executed by the Contractor, improper or insufficient maintenance, improper operation, or normal wear and tear and normal usage. Any substitution proposed by Contractor must be approved by Architect as being an equivalent, whether functionality and / or aesthetically, as applicable. Contractor shall be solely responsible to provide any and all documentation that would permit the Architect to evaluate whether the proposed substitution should be accepted as an approved equal.

§ 3.5.2 All material, equipment, or other special warranties required by the Contract Documents shall be issued in the name of the Owner, or shall be transferable to the Owner, and shall commence in accordance with Section 9.8.4. All warranties shall run for a one year period from the date of substantial Completion. If a Project is phased, any required warranties shall begin to run from the date of substantial completion for the last phase of the Project.

§ 3.6 Taxes

As applicable, the Contractor shall pay sales, consumer, use and similar taxes for the Work provided by the Contractor that are legally enacted when bids are received or negotiations concluded, whether or not yet effective or merely scheduled to go into effect. The Contractor shall obtain from the Owner a form ST-4, Sales and Use Tax Exemption, to use in the buy-out of materials.

§ 3.7 Permits, Fees, Notices and Compliance with Laws

§ 3.7.1 Unless otherwise provided in the Contract Documents, the Contractor shall secure and pay for the building / construction permit as well as for other permits, fees, licenses, and inspections by utility companies and government agencies necessary for proper execution and completion of the Work and use and occupancy of any structures that are part of the Work that are customarily secured after execution of the Contract.

§ 3.7.2 The Contractor shall comply with and give notices required by applicable laws, statutes, ordinances, codes, rules and regulations, and lawful orders of public authorities applicable to performance of the Work.

§ 3.7.3 If the Contractor performs Work knowing it to be contrary to applicable laws, statutes, ordinances, codes, rules and regulations, or lawful orders of public authorities, the Contractor shall assume appropriate responsibility for such Work and shall bear the costs attributable to correction.

§ 3.7.4 Concealed or Unknown Conditions

Pursuant to S 3409 (217th Legislative Session) codified at **N.J.S.A.** 40A:11-1 et seq.:

(Paragraph deleted)

§ 3.7.4.1 Differing site condition provisions

(1) If the Contractor encounters differing site conditions during the progress of the work of the contract, the Contractor shall within 20 days promptly notify the contracting unit in writing of the specific differing site conditions encountered before the site is further disturbed and before any additional work is performed in the impacted area.

(2) Upon receipt of a differing site conditions notice in accordance with paragraph (1) of this subsection, or upon the contracting unit otherwise learning of differing site conditions, the notify the Architect shall promptly undertake an investigation to determine whether differing site conditions are present.

AIA Document A201® – 2017. Copyright © 1911, 1915, 1918, 1925, 1937, 1951, 1958, 1961, 1963, 1966, 1970, 1976, 1987, 1997, 2007 and 2017 by The American Institute of Architects. All rights reserved. The "American Institute of Architects," "AIA," the AIA Logo, "A201," and "AIA Contract Documents" are registered trademarks and may not be used without permission. This document was produced by AIA software at 11:08:54 ET on 03/18/2022 under Order No.2114262975 which expires on 12/03/2022, is not for resale, is licensed for one-time use only, and may only be used in accordance with the AIA Contract Documents® Terms of Service. To report copyright violations, e-mail copyright@aia.org.
User Notes: (944467505)

(3) If the contracting unit determines different site conditions that may result in additional costs or delays exist, the contracting unit shall provide prompt written notice to the contractor containing directions on how to proceed.

(4) (a) The contracting unit shall make a fair and equitable adjustment to the contract price and contract completion date for increased costs and delays resulting from the agreed upon differing site conditions encountered by the contractor.

(b) If both parties agree that the contracting unit's investigation and directions decrease the contractor's costs or time of performance, the contracting unit shall be entitled to a fair and equitable downward adjustment of the contract price or time of performance.

(c) If the contracting unit determines that there are no differing site conditions present that would result in additional costs or delays, the contracting unit shall so advise the contractor, in writing, and the contractor shall resume performance of the contract, and shall be entitled to pursue a differing site conditions claim against the contracting unit for additional compensation or time attributable to the alleged differing site conditions.

(5) Execution of the contract by the contractor shall constitute a representation that the contractor has visited the site and has become generally familiar with the local conditions under which the work is to be performed.

(6) As used in this section herein, "differing site conditions" mean physical conditions at the contract work site that are subsurface or otherwise concealed and which differ materially from those indicated in the contract documents or are of such an unusual nature that the conditions differ materially from those ordinarily encountered and generally recognized as inherent in the work of the character provided for in the contract.

§ 3.7.4.2 Suspension of work provisions

(1) The contracting unit shall provide written notice to the contractor in advance of any suspension of work lasting more than 10 calendar days of the performance of all or any portion of the work of the contract.

(2) If the performance of all or any portion of the work of the contract is suspended by the contracting unit for more than 10 calendar days due to no fault of the contractor or as a consequence of an occurrence beyond the contracting unit's control, the contractor shall be entitled to compensation for any resultant delay to the project completion or additional contractor expenses, and to an extension of time, provided that, to the extent feasible, the contractor, within 10 calendar days following the conclusion of the suspension, notifies the contracting unit, in writing, of the nature and extent of the suspension of work. The notice shall include available supporting information, which information may thereafter be supplemented by the contractor as needed and as may be reasonably requested by the contracting unit. Whenever a work suspension exceeds 60 days, upon seven days' written notice, either party shall have the option to terminate the contract for cause and to be fairly and equitably compensated therefor.

(3) Upon receipt of the contractor's suspension of work notice in accordance with paragraph (2) of this subsection, the contracting unit shall promptly evaluate the contractor's notice and promptly advise the contractor of its determination on how to proceed in writing.

(4) (a) If the contracting unit determines that the contractor is entitled to additional compensation or time, the contracting unit shall make a fair and equitable upward adjustment to the contract price and contract completion date.

(b) If the contracting unit determines that the contractor is not entitled to additional compensation or time, the contractor shall proceed with the performance of the contract work, and shall be entitled to pursue a suspension of work claim against the contracting unit for additional compensation or time attributable to the suspension.

(5) Failure of the contractor to provide timely notice of a suspension of work shall result in a waiver of a claim if the contracting unit can prove by clear and convincing evidence that the lack of notice or delayed notice by the contractor actually prejudiced the contracting unit's ability to adequately investigate and defend against the claim.

§ 3.7.4.3 Change in character of work provisions:

AIA Document A201® – 2017. Copyright © 1911, 1915, 1918, 1925, 1937, 1951, 1958, 1961, 1963, 1966, 1970, 1976, 1987, 1997, 2007 and 2017 by The American Institute of Architects. All rights reserved. The "American Institute of Architects," "AIA," the AIA Logo, "A201," and "AIA Contract Documents" are registered trademarks and may not be used without permission. This document was produced by AIA software at 11:08:54 ET on 03/18/2022 under Order No.2114262975 which expires on 12/03/2022, is not for resale, is licensed for one-time use only, and may only be used in accordance with the AIA Contract Documents® Terms of Service. To report copyright violations, e-mail copyright@aia.org.
User Notes: (944467505)

(1) If the contractor believes that a change directive by the contracting unit results in a material change to the contract work, the contractor shall so notify the contracting unit in writing. The contractor shall continue to perform all work on the project that is not the subject of the notice.

(2) Upon receipt of the contractor's change in character notice in accordance with paragraph (1) of this subsection, the contracting unit shall promptly evaluate the contractor's notice and promptly advise the contractor of its determination on how to proceed in writing.

(3) (a) If the contracting unit determines that a change to the contractor's work caused or directed by the contracting unit materially changes the character of any aspect of the contract work the contracting unit shall make a fair and equitable upward adjustment to the contract price and contract completion date. The basis for any such price adjustment shall be the difference between the cost of performance of the work as planned at the time of contracting and the actual cost of such work as a result of its change in character, or as otherwise mutually agreed upon by the contractor and the contracting unit prior to the contractor performing the subject work.

(b) If the contracting unit determines that the contractor is not entitled to additional compensation or time, the contractor shall continue the performance of all contract work, and shall be entitled to pursue a claim against the contracting unit for additional compensation or time attributable to the alleged material change.

(4) As used in this subsection, "material change" means a character change which increases or decreases the contractor's cost of performing the work, increases or decreases the amount of time by which the contractor completes the work in relation to the contractually required completion date, or both.

§ 3.7.4 If, in the course of the Work, the Contractor encounters human remains or recognizes the existence of burial markers, archaeological sites or wetlands not indicated in the Contract Documents, the Contractor shall immediately suspend any operations that would affect them and shall notify the Owner and Architect. Upon receipt of such notice, the Owner shall promptly take any action necessary to obtain governmental authorization required to resume the operations. The Contractor shall continue to suspend such operations until otherwise instructed by the Owner but shall continue with all other operations that do not affect those remains or features. Requests for adjustments in the Contract Sum and Contract Time arising from the existence of such remains or features may be made as provided in Article 15.

§ 3.8 Allowances

§ 3.8.1 The Contractor shall include in the Contract Sum all allowances stated in the Contract Documents. Items covered by allowances shall be supplied for such amounts and by such persons or entities as the Owner may direct, but the Contractor shall not be required to employ persons or entities to whom the Contractor has reasonable objection.

§ 3.8.2 Unless otherwise provided in the Contract Documents,

.1 allowances shall cover the cost to the Contractor of materials and equipment delivered at the site and all required applicable taxes ;

.2 Contractor's costs for unloading and handling at the site, labor, installation costs, overhead, profit, General Contractor's Commercial General Liability Insurance and other expenses contemplated for stated allowance amounts shall be included in the Contract Sum as well as in the allowances; and

.3 whenever costs are more than or less than allowances, the Contract Sum shall be adjusted accordingly by Change Order.

Notwithstanding anything to the contrary in this Section 3.8, when approved change orders are credits against the Contract Allowance, the markup shall be limited to profit pursuant o Section 7.2.1. Overhead costs associated with performance bonds, fees, insurance, taxes and the like shall not be included.

§ 3.8.3 Materials and equipment under an allowance shall be selected by the Owner with reasonable promptness.

§ 3.9 Superintendent

§ 3.9.1 The Contractor shall employ a competent superintendent and necessary assistants who shall be in attendance at the Project site during performance of the Work. The superintendent shall represent the Contractor, and communications given to the superintendent shall be as binding as if given to the Contractor.

AIA Document A201® – 2017. Copyright © 1911, 1915, 1918, 1925, 1937, 1951, 1958, 1961, 1963, 1966, 1970, 1976, 1987, 1997, 2007 and 2017 by The American Institute of Architects. All rights reserved. The "American Institute of Architects," "AIA," the AIA Logo, "A201," and "AIA Contract Documents" are registered trademarks and may not be used without permission. This document was produced by AIA software at 11:08:54 ET on 03/18/2022 under Order No.2114262975 which expires on 12/03/2022, is not for resale, is licensed for one-time use only, and may only be used in accordance with the AIA Contract Documents® Terms of Service. To report copyright violations, e-mail copyright@aia.org.
User Notes: (944467505)

§ 3.9.2 The Contractor, as soon as practicable after award of the Contract, shall notify the Owner and Architect of the name and qualifications of a proposed superintendent. Within 14 days of receipt of the information, the Architect may notify the Contractor, stating whether the Owner or the Architect (1) has reasonable objection to the proposed superintendent or (2) requires additional time for review. Failure of the Architect to provide notice within the 14-day period shall constitute notice of no reasonable objection.

§ 3.9.3 The Contractor shall not employ a proposed superintendent to whom the Owner or Architect has made reasonable and timely objection. The Contractor shall not change the superintendent without the Owner's consent, which shall not unreasonably be withheld or delayed.

§ 3.10 Contractor's Construction and Submittal Schedules

§ 3.10.1 The Contractor, promptly (but not greater than 10 days) after being awarded the Contract, shall submit for the Owner's and Architect's information a Contractor's construction schedule for the Work. The schedule shall contain detail appropriate for the Project, including (1) the date of commencement of the Work, interim schedule milestone dates, and the date of Substantial Completion; (2) an apportionment of the Work by construction activity; and (3) the time required for completion of each portion of the Work. The schedule shall provide for the orderly progression of the Work to completion and shall not exceed time limits current under the Contract Documents. An updated, realistic schedule shall be provided with every payment requisition. In the event that the Contractor fails to provide an updated, realistic schedule with a certain payment requisition(s), the Architect shall have the right to withhold review of the payment requisition and the Owner shall not be obligated to pay under the said payment requisition until such time the Contractor submits the requisite, updated, realistic schedule. In such an instance, the reduction of manpower or the suspension of Work by the Contractor shall be considered to be a breach of this Agreement. Neither the Owner nor the Architect shall be liable for any direct or consequential delays or costs and expenses incurred by the Contractor in connection with the foregoing provisions. The Contractor hereby acknowledges that the receipt of updated, realistic schedules on a monthly basis by the Contractor is material element in the Contractor's Work and is necessary in the overall interest of the public.

§ 3.10.1.1 The schedule shall not exceed time limits current under the Contract Documents for substantial completion of any phases, if set forth and that of the entire Project. The Contractor's Construction Schedule shall be updated by the Contractor to reflect the status of its work in relation of the Contractor's Construction Schedule, and any recommended changes in the sequencing and scheduling. The Contractor's Construction Schedule shall be updated pursuant to Section 3.10.1 hereinabove or updated as often as deemed necessary by the Architect. Upon four (4) working days of such request by the Architect, the Contractor shall submit a revised draft Construction Schedule update to the Architect. The updated Contractor's Schedule will be reviewed at each Job Meeting. Failure by the Contractor to correct the scheduled update in the time required shall result in a reduction in the Contractor's Contract Amount of FIVE HUNDRED ($500.00) per each occurrence a penalty. In addition, payment to the Contractor may result in the withholding of payments to the Contractor, and in the liability of the Contractor for liquidated damages for the failure of the Project to be completed within the designated time. Any acceleration of the Contractor's Construction Schedule shall be agreed upon and approved by the Architect and Owner's designee.

§ 3.10.2 The Contractor, promptly (but not greater than 10 days) after being awarded the Contract and thereafter as necessary to maintain a current submittal schedule, shall submit a submittal schedule for the Architect's approval. The Architect's approval shall not be unreasonably delayed or withheld. The submittal schedule shall (1) be coordinated with the Contractor's construction schedule, and (2) allow the Architect reasonable time to review submittals. If the Contractor fails to submit a submittal schedule, or fails to provide submittals in accordance with the approved submittal schedule, the Contractor shall not be entitled to any increase in Contract Sum or extension of Contract Time based on the time required for review of submittals.

§ 3.10.3 The Contractor shall perform the Work in general accordance with the most recent schedules submitted to the Owner and Architect. All work that may be disruptive to the on-going use and occupancy of the building / property by the Owner shall be scheduled by the Contractor after normal business / operating hours or during the weekends at no additional cost. If a Contractor is unsure of whether its Work may impact or be disruptive to the Owner, it shall be incumbent upon the Contractor to submit a Request-for-Information (RFI) in this regard, prior to submitting its bid.

§ 3.11 Documents and Samples at the Site

The Contractor shall make available, at the Project site, the Contract Documents, including Change Orders, Construction Change Directives, and other Modifications, in good order and marked currently to indicate field

AIA Document A201® – 2017. Copyright © 1911, 1915, 1918, 1925, 1937, 1951, 1958, 1961, 1963, 1966, 1970, 1976, 1987, 1997, 2007 and 2017 by The American Institute of Architects. All rights reserved. The "American Institute of Architects," "AIA," the AIA Logo, "A201," and "AIA Contract Documents" are registered trademarks and may not be used without permission. This document was produced by AIA software at 11:08:54 ET on 03/18/2022 under Order No.2114262975 which expires on 12/03/2022, is not for resale, is licensed for one-time use only, and may only be used in accordance with the AIA Contract Documents® Terms of Service. To report copyright violations, e-mail copyright@aia.org.
User Notes: (944467505)

changes and selections made during construction, and the approved Shop Drawings, Product Data, Samples, and similar required submittals. These shall be in electronic form or paper copy, available to the Architect and Owner, and delivered to the Architect for submittal to the Owner upon completion of the Work as a record of the Work as constructed.

§ 3.12 Shop Drawings, Product Data and Samples

§ 3.12.1 Shop Drawings are drawings, diagrams, schedules, and other data specially prepared for the Work by the Contractor or a Subcontractor, Sub-subcontractor, manufacturer, supplier, or distributor to illustrate some portion of the Work.

§ 3.12.2 Product Data are illustrations, standard schedules, performance charts, instructions, brochures, diagrams, and other information furnished by the Contractor to illustrate materials or equipment for some portion of the Work.

§ 3.12.3 Samples are physical examples that illustrate materials, equipment, or workmanship, and establish standards by which the Work will be judged.

§ 3.12.4 Shop Drawings, Product Data, Samples, and similar submittals are not Contract Documents. Their purpose is to demonstrate how the Contractor proposes to conform to the information given and the design concept expressed in the Contract Documents for those portions of the Work for which the Contract Documents require submittals. Review by the Architect is subject to the limitations of Section 4.2.7. Informational submittals upon which the Architect is not expected to take responsive action may be so identified in the Contract Documents. Submittals that are not required by the Contract Documents may be returned by the Architect without action.

§ 3.12.5 The Contractor shall review for compliance with the Contract Documents, approve, and submit to the Architect, Shop Drawings, Product Data, Samples, and similar submittals required by the Contract Documents, in accordance with the submittal schedule approved by the Architect or, in the absence of an approved submittal schedule, with reasonable promptness and in such sequence as to cause no delay in the Work or in the activities of the Owner or of Separate Contractors.

§ 3.12.6 By submitting Shop Drawings, Product Data, Samples, and similar submittals, the Contractor represents to the Owner and Architect that the Contractor has (1) reviewed and approved them, (2) determined and verified materials, field measurements and field construction criteria related thereto, or will do so, and (3) checked and coordinated the information contained within such submittals with the requirements of the Work and of the Contract Documents.

§ 3.12.7 The Contractor shall perform no portion of the Work for which the Contract Documents require submittal and review of Shop Drawings, Product Data, Samples, or similar submittals, until the respective submittal has been approved by the Architect.

§ 3.12.8 The Work shall be in accordance with approved submittals except that the Contractor shall not be relieved of responsibility for deviations from the requirements of the Contract Documents by the Architect's approval of Shop Drawings, Product Data, Samples, or similar submittals, unless the Contractor has specifically notified the Architect of such deviation at the time of submittal and (1) the Architect has given written approval to the specific deviation as a minor change in the Work, or (2) a Change Order or Construction Change Directive has been issued authorizing the deviation. The Contractor shall not be relieved of responsibility for errors or omissions in Shop Drawings, Product Data, Samples, or similar submittals, by the Architect's approval thereof.

§ 3.12.9 The Contractor shall direct specific attention, in writing or on resubmitted Shop Drawings, Product Data, Samples, or similar submittals, to revisions other than those requested by the Architect on previous submittals. In the absence of such notice, the Architect's approval of a resubmission shall not apply to such revisions.

§ 3.12.10 The Contractor shall not be required to provide professional services that constitute the practice of architecture or engineering unless such services are specifically required by the Contract Documents for a portion of the Work or unless the Contractor needs to provide such services in order to carry out the Contractor's responsibilities for construction means, methods, techniques, sequences, and procedures. The Contractor shall not be required to provide professional services in violation of applicable law.

AIA Document A201® – 2017. Copyright © 1911, 1915, 1918, 1925, 1937, 1951, 1958, 1961, 1963, 1966, 1970, 1976, 1987, 1997, 2007 and 2017 by The American Institute of Architects. All rights reserved. The "American Institute of Architects," "AIA," the AIA Logo, "A201," and "AIA Contract Documents" are registered trademarks and may not be used without permission. This document was produced by AIA software at 11:08:54 ET on 03/18/2022 under Order No.2114262975 which expires on 12/03/2022, is not for resale, is licensed for one-time use only, and may only be used in accordance with the AIA Contract Documents® Terms of Service. To report copyright violations, e-mail copyright@aia.org.
User Notes: (944467505)

§ 3.12.10.1 If professional design services or certifications by a design professional related to systems, materials, or equipment are specifically required of the Contractor by the Contract Documents, the Owner and the Architect will specify all performance and design criteria that such services must satisfy. The Contractor shall be entitled to rely upon the adequacy and accuracy of the performance and design criteria provided in the Contract Documents. The Contractor shall cause such services or certifications to be provided by an appropriately licensed design professional, whose signature and seal shall appear on all drawings, calculations, specifications, certifications, Shop Drawings, and other submittals prepared by such professional. Shop Drawings, and other submittals related to the Work, designed or certified by such professional, if prepared by others, shall bear such professional's written approval when submitted to the Architect. The Owner and the Architect shall be entitled to rely upon the adequacy and accuracy of the services, certifications, and approvals performed or provided by such design professionals, provided the Owner and Architect have specified to the Contractor the performance and design criteria that such services must satisfy. Pursuant to this Section 3.12.10, the Architect will review and approve or take other appropriate action on submittals only for the limited purpose of checking for conformance with information given and the design concept expressed in the Contract Documents.

§ 3.12.10.2 If the Contract Documents require the Contractor's design professional to certify that the Work has been performed in accordance with the design criteria, the Contractor shall furnish such certifications to the Architect at the time and in the form specified by the Architect.

§ 3.12.11 Contractor shall stamp shop drawings accompanied by Contractor's signature and date of approval.

§ 3.12.12 When a Contractor makes a substitution submission and does not identify associated modifications, all consequential additional costs associated with implementing the substitution shall be borne by the Contractor.

§ 3.12.13 The Architect's review of shop drawings shall be limited to the original submission and one revision. If further revisions are required, the sum certain amount of One Thousand Dollars ($1,000.00) per additional review, shall be deducted from the Contractor's Application for payment. The Owner shall be permitted to make payment to the Architect for this deducted amount.

§ 3.13 Use of Site

The Contractor shall confine operations at the site to areas permitted by applicable laws, statutes, ordinances, codes, rules and regulations, lawful orders of public authorities, and the Contract Documents and shall not unreasonably encumber the site with materials or equipment.

§ 3.14 Cutting and Patching

§ 3.14.1 The Contractor shall be responsible for cutting, fitting, or patching required to complete the Work or to make its parts fit together properly. All areas requiring cutting, fitting, or patching shall be restored to the condition existing prior to the cutting, fitting, or patching, unless otherwise required by the Contract Documents.

§ 3.14.2 The Contractor shall not damage or endanger a portion of the Work or fully or partially completed construction of the Owner or Separate Contractors by cutting, patching, or otherwise altering such construction, or by excavation. The Contractor shall not cut or otherwise alter construction by the Owner or a Separate Contractor except with written consent of the Owner and of the Separate Contractor. Consent shall not be unreasonably withheld. The Contractor shall not unreasonably withhold, from the Owner or a Separate Contractor, its consent to cutting or otherwise altering the Work.

§ 3.15 Cleaning Up

§ 3.15.1 The Contractor shall keep the premises and surrounding area free from accumulation of waste materials and rubbish caused by operations under the Contract. At completion of the Work, the Contractor shall remove waste materials, rubbish, the Contractor's tools, construction equipment, machinery, and surplus materials from and about the Project.

§ 3.15.2 If the Contractor fails to clean up as provided in the Contract Documents, the Owner may do so and the Owner shall be entitled to reimbursement from the Contractor.

AIA Document A201® – 2017. Copyright © 1911, 1915, 1918, 1925, 1937, 1951, 1958, 1961, 1963, 1966, 1970, 1976, 1987, 1997, 2007 and 2017 by The American Institute of Architects. All rights reserved. The "American Institute of Architects," "AIA," the AIA Logo, "A201," and "AIA Contract Documents" are registered trademarks and may not be used without permission. This document was produced by AIA software at 11:08:54 ET on 03/18/2022 under Order No.2114262975 which expires on 12/03/2022, is not for resale, is licensed for one-time use only, and may only be used in accordance with the AIA Contract Documents® Terms of Service. To report copyright violations, e-mail copyright@aia.org.
User Notes: (944467505)

§ 3.16 Access to Work
The Contractor shall provide the Owner and Architect with access to the Work in preparation and progress wherever located.

§ 3.17 Royalties, Patents and Copyrights
The Contractor shall pay all royalties and license fees. The Contractor shall defend suits or claims for infringement of copyrights and patent rights and shall hold the Owner and Architect harmless from loss on account thereof, but shall not be responsible for defense or loss when a particular design, process, or product of a particular manufacturer or manufacturers is required by the Contract Documents, or where the copyright violations are contained in Drawings, Specifications, or other documents prepared by the Owner or Architect. However, if an infringement of a copyright or patent is discovered by, or made known to, the Contractor, the Contractor shall be responsible for the loss unless the information is promptly furnished to the Architect.

§ 3.18 Indemnification
§ 3.18.1 To the fullest extent permitted by law, the Contractor shall indemnify and hold harmless the Owner, Architect, Architect's consultants, and agents and employees of any of them from and against claims, damages, losses, and expenses, including but not limited to attorneys' fees, arising out of or resulting from performance of the Work, provided that such claim, damage, loss, or expense is attributable to bodily injury, sickness, disease or death, or to injury to or destruction of tangible property (other than the Work itself), but only to the extent caused by the negligent acts or omissions of the Contractor, a Subcontractor, anyone directly or indirectly employed by them, or anyone for whose acts they may be liable, regardless of whether or not such claim, damage, loss, or expense is caused in part by a party indemnified hereunder. Such obligation shall not be construed to negate, abridge, or reduce other rights or obligations of indemnity that would otherwise exist as to a party or person described in this Section 3.18.

§ 3.18.2 In claims against any person or entity indemnified under this Section 3.18 by an employee of the Contractor, a Subcontractor, anyone directly or indirectly employed by them, or anyone for whose acts they may be liable, the indemnification obligation under Section 3.18.1 shall not be limited by a limitation on amount or type of damages, compensation, or benefits payable by or for the Contractor or a Subcontractor under workers' compensation acts, disability benefit acts, or other employee benefit acts.

ARTICLE 4 ARCHITECT
§ 4.1 General
§ 4.1.1 The Architect is the person or entity retained by the Owner pursuant to Section 2.3.2 and identified as such in the Agreement.

§ 4.1.2 Duties, responsibilities, and limitations of authority of the Architect as set forth in the Contract Documents shall not be restricted, modified, or extended without written consent of the Owner and Architect. Contractor shall be notified in writing of any change in the authority of the Architect.

§ 4.2 Administration of the Contract
§ 4.2.1 The Architect will provide administration of the Contract as described in the Contract Documents and will be an Owner's representative during construction until the date the Architect issues the final Certificate for Payment. The Architect will have authority to act on behalf of the Owner only to the extent provided in the Contract Documents.

§ 4.2.2 The Architect will visit the site at intervals appropriate to the stage of construction, or as otherwise agreed with the Owner, to become generally familiar with the progress and quality of the portion of the Work completed, and to determine in general if the Work observed is being performed in a manner indicating that the Work, when fully completed, will be in accordance with the Contract Documents. However, the Architect will not be required to make exhaustive or continuous on-site inspections or observations to check the quality or quantity of the Work. The Architect will not have control over, charge of, or responsibility for the construction means, methods, techniques, sequences or procedures, or for the safety precautions and programs in connection with the Work, since these are solely the Contractor's rights and responsibilities under the Contract Documents.

§ 4.2.3 On the basis of the site visits, the Architect will keep the Owner reasonably informed about the progress and quality of the portion of the Work completed, and promptly report to the Owner (1) known deviations from the Contract Documents, (2) known deviations from the most recent construction schedule submitted by the Contractor, and (3) defects and deficiencies observed in the Work. The Architect will not be responsible for the Contractor's

AIA Document A201® – 2017. Copyright © 1911, 1915, 1918, 1925, 1937, 1951, 1958, 1961, 1963, 1966, 1970, 1976, 1987, 1997, 2007 and 2017 by The American Institute of Architects. All rights reserved. The "American Institute of Architects," "AIA," the AIA Logo, "A201," and "AIA Contract Documents" are registered trademarks and may not be used without permission. This document was produced by AIA software at 11:08:54 ET on 03/18/2022 under Order No.2114262975 which expires on 12/03/2022, is not for resale, is licensed for one-time use only, and may only be used in accordance with the AIA Contract Documents® Terms of Service. To report copyright violations, e-mail copyright@aia.org.
User Notes: (944467505)

failure to perform the Work in accordance with the requirements of the Contract Documents. The Architect will not have control over or charge of, and will not be responsible for acts or omissions of, the Contractor, Subcontractors, or their agents or employees, or any other persons or entities performing portions of the Work.

§ 4.2.4 Communications
The Owner and Contractor shall include the Architect in all communications that relate to or affect the Architect's services or professional responsibilities. The Owner shall promptly notify the Architect of the substance of any direct communications between the Owner and the Contractor otherwise relating to the Project. Communications by and with the Architect's consultants shall be through the Architect. Communications by and with Subcontractors and suppliers shall be through the Contractor. Communications by and with Separate Contractors shall be through the Owner. The Contract Documents may specify other communication protocols.

§ 4.2.5 Based on the Architect's evaluations of the Contractor's Applications for Payment, the Architect will review and certify the amounts due the Contractor and will issue Certificates for Payment in such amounts, subject to the conditions set forth in Section 9.4.2 and 9.6.6 hereinbelow

§ 4.2.6 The Architect has authority to reject Work that does not conform to the Contract Documents. Whenever the Architect considers it necessary or advisable, the Architect will have authority to require inspection or testing of the Work in accordance with Sections 13.4.2 and 13.4.3, whether or not the Work is fabricated, installed or completed. However, neither this authority of the Architect nor a decision made in good faith either to exercise or not to exercise such authority shall give rise to a duty or responsibility of the Architect to the Contractor, Subcontractors, suppliers, their agents or employees, or other persons or entities performing portions of the Work.

§ 4.2.7 The Architect will review and approve, or take other appropriate action upon, the Contractor's submittals such as Shop Drawings, Product Data, and Samples, but only for the limited purpose of checking for conformance with information given and the design concept expressed in the Contract Documents. The Architect's action will be taken in accordance with the submittal schedule approved by the Architect or, in the absence of an approved submittal schedule, with reasonable promptness while allowing sufficient time in the Architect's professional judgment to permit adequate review. Review of such submittals is not conducted for the purpose of determining the accuracy and completeness of other details such as dimensions and quantities, or for coordination with other portions of the Work or for substantiating instructions for installation or performance of equipment or systems, all of which remain the responsibility of the Contractor as required by the Contract Documents. The Architect's review of the Contractor's submittals shall not relieve the Contractor of the obligations under Sections 3.3, 3.5, and 3.12. The Architect's review shall not constitute approval of safety precautions or of any construction means, methods, techniques, sequences, or procedures. The Architect's approval of a specific item shall not indicate approval of an assembly of which the item is a component.

§ 4.2.8 The Architect will prepare Change Orders and Construction Change Directives, and may order minor changes in the Work as provided in Section 7.4. The Architect will investigate and make determinations and recommendations regarding concealed and unknown conditions as provided in Section 3.7.4.

§ 4.2.9 The Architect will conduct site observation to determine the date or dates of Substantial Completion and the date of final completion; issue Certificates of Substantial Completion pursuant to Section 9.8; receive and forward to the Owner, for the Owner's review and records, written warranties and related documents required by the Contract and assembled by the Contractor pursuant to Section 9.10; and issue a final Certificate for Payment pursuant to Section 9.10.

§ 4.2.10 If the Owner and Architect agree, the Architect will provide one or more Project representatives to assist in carrying out the Architect's responsibilities at the site. The Owner shall notify the Contractor of any change in the duties, responsibilities and limitations of authority of the Project representatives.

§ 4.2.11 The Architect will interpret and decide matters concerning performance under, and requirements of, the Contract Documents on written request of either the Owner or Contractor. The Architect's response to such requests will be made in writing within any time limits agreed upon or otherwise with reasonable promptness.

§ 4.2.12 Interpretations and decisions of the Architect will be consistent with the intent of, and reasonably inferable from, the Contract Documents and will be in writing or in the form of drawings. When making such interpretations

AIA Document A201® – 2017. Copyright © 1911, 1915, 1918, 1925, 1937, 1951, 1958, 1961, 1963, 1966, 1970, 1976, 1987, 1997, 2007 and 2017 by The American Institute of Architects. All rights reserved. The "American Institute of Architects," "AIA," the AIA Logo, "A201," and "AIA Contract Documents" are registered trademarks and may not be used without permission. This document was produced by AIA software at 11:08:54 ET on 03/18/2022 under Order No.2114262975 which expires on 12/03/2022, is not for resale, is licensed for one-time use only, and may only be used in accordance with the AIA Contract Documents® Terms of Service. To report copyright violations, e-mail copyright@aia.org.
User Notes: (944467505)

and decisions, the Architect will endeavor to secure faithful performance by both Owner and Contractor, will not show partiality to either, and will not be liable for results of interpretations or decisions rendered in good faith.

§ 4.2.13 The Architect's decisions on matters relating to aesthetic effect will be final if consistent with the intent expressed in the Contract Documents.

§ 4.2.14 The Architect will review and respond to requests for information about the Contract Documents. The Architect's response to such requests will be made in writing within any time limits agreed upon or otherwise with reasonable promptness. If appropriate, the Architect will prepare and issue supplemental Drawings and Specifications in response to the requests for information.

ARTICLE 5 SUBCONTRACTORS

§ 5.1 Definitions

§ 5.1.1 A Subcontractor is a person or entity who has a direct contract with the Contractor to perform a portion of the Work at the site. The term "Subcontractor" is referred to throughout the Contract Documents as if singular in number and means a Subcontractor or an authorized representative of the Subcontractor. The term "Subcontractor" does not include a Separate Contractor or the subcontractors of a Separate Contractor.

§ 5.1.2 A Sub-subcontractor is a person or entity who has a direct or indirect contract with a Subcontractor to perform a portion of the Work at the site. The term "Sub-subcontractor" is referred to throughout the Contract Documents as if singular in number and means a Sub-subcontractor or an authorized representative of the Sub-subcontractor.

§ 5.2 Award of Subcontracts and Other Contracts for Portions of the Work

§ 5.2.1 Unless otherwise required pursuant to the public bid laws, the Contractor shall submit the notification of persons or entities for all portions of the Work within thirty (30) days of the Notice to Proceed. The Contractor shall submit evidence of subcontracts in the form of letters of intent, purchase orders, subcontract agreements, or other means of confirmation. Unless otherwise stated in the Contract Documents, the Contractor, as soon as practicable after award of the Contract, shall notify the Owner and Architect of the persons or entities proposed for each principal portion of the Work, including those who are to furnish materials or equipment fabricated to a special design. Within 14 days of receipt of the information, the Architect may notify the Contractor whether the Owner or the Architect (1) has reasonable objection to any such proposed person or entity or (2) requires additional time for review. Failure of the Architect to provide notice within the 14-day period shall constitute notice of no reasonable objection.

§ 5.2.2 The Contractor shall not contract with a proposed person or entity to whom the Owner or Architect has made reasonable and timely objection. The Contractor shall not be required to contract with anyone to whom the Contractor has made reasonable objection.

§ 5.2.3 If the Owner or Architect has reasonable objection to a person or entity proposed by the Contractor, the Contractor shall propose another to whom the Owner or Architect has no reasonable objection. If the proposed but rejected Subcontractor was reasonably capable of performing the Work, the Contract Sum and Contract Time shall be increased or decreased by the difference, if any, occasioned by such change, and an appropriate Change Order shall be issued before commencement of the substitute Subcontractor's Work. However, no increase in the Contract Sum or Contract Time shall be allowed for such change unless the Contractor has acted promptly and responsively in submitting names as required.

§ 5.2.4 The Contractor shall not substitute a Subcontractor, person, or entity for one previously selected if the Owner or Architect makes reasonable objection to such substitution.

§ 5.3 Subcontractual Relations

By appropriate written agreement, the Contractor shall require each Subcontractor, to the extent of the Work to be performed by the Subcontractor, to be bound to the Contractor by terms of the Contract Documents, and to assume toward the Contractor all the obligations and responsibilities, including the responsibility for safety of the Subcontractor's Work that the Contractor, by these Contract Documents, assumes toward the Owner and Architect. Each subcontract agreement shall preserve and protect the rights of the Owner and Architect under the Contract Documents with respect to the Work to be performed by the Subcontractor so that subcontracting thereof will not prejudice such rights, and shall allow to the Subcontractor, unless specifically provided otherwise in the subcontract agreement, the benefit of all rights, remedies, and redress against the Contractor that the Contractor, by the Contract

AIA Document A201® – 2017. Copyright © 1911, 1915, 1918, 1925, 1937, 1951, 1958, 1961, 1963, 1966, 1970, 1976, 1987, 1997, 2007 and 2017 by The American Institute of Architects. All rights reserved. The "American Institute of Architects," "AIA," the AIA Logo, "A201," and "AIA Contract Documents" are registered trademarks and may not be used without permission. This document was produced by AIA software at 11:08:54 ET on 03/18/2022 under Order No.2114262975 which expires on 12/03/2022, is not for resale, is licensed for one-time use only, and may only be used in accordance with the AIA Contract Documents® Terms of Service. To report copyright violations, e-mail copyright@aia.org.
User Notes: (944467505)

Documents, has against the Owner. Where appropriate, the Contractor shall require each Subcontractor to enter into similar agreements with Sub-subcontractors. The Contractor shall make available to each proposed Subcontractor, prior to the execution of the subcontract agreement, copies of the Contract Documents to which the Subcontractor will be bound, and, upon written request of the Subcontractor, identify to the Subcontractor terms and conditions of the proposed subcontract agreement that may be at variance with the Contract Documents. Subcontractors will similarly make copies of applicable portions of such documents available to their respective proposed Sub-subcontractors.

§ 5.4 Contingent Assignment of Subcontracts

§ 5.4.1 Each subcontract agreement for a portion of the Work is assigned by the Contractor to the Owner, provided that

- **.1** assignment is effective only after termination of the Contract by the Owner for cause pursuant to Section 14.2 and only for those subcontract agreements that the Owner accepts by notifying the Subcontractor and Contractor; and
- **.2** assignment is subject to the prior rights of the surety, if any, obligated under bond relating to the Contract.

When the Owner accepts the assignment of a subcontract agreement, the Owner assumes the Contractor's rights and obligations under the subcontract.

§ 5.4.2 Upon such assignment, if the Work has been suspended for more than 120 days, the Subcontractor's compensation shall be equitably adjusted for increases in cost resulting from the suspension.

§ 5.4.3 Upon assignment to the Owner under this Section 5.4, the Owner may further assign the subcontract to a successor contractor or other entity. If the Owner assigns the subcontract to a successor contractor or other entity, the Owner shall nevertheless remain legally responsible for all of the successor contractor's obligations under the subcontract.

ARTICLE 6 CONSTRUCTION BY OWNER OR BY SEPARATE CONTRACTORS

§ 6.1 Owner's Right to Perform Construction and to Award Separate Contracts

§ 6.1.1 The term "Separate Contractor(s)" shall mean other contractors retained by the Owner under separate agreements. The Owner reserves the right to perform construction or operations related to the Project with the Owner's own forces, and with Separate Contractors retained under Conditions of the Contract substantially similar to those of this Contract, including those provisions of the Conditions of the Contract related to insurance and waiver of subrogation.

§ 6.1.2 When separate contracts are awarded for different portions of the Project or other construction or operations on the site, the term "Contractor" in the Contract Documents in each case shall mean the Contractor who executes each separate Owner-Contractor Agreement.

§ 6.1.3 The Owner shall provide for coordination of the activities of the Owner's own forces and of each Separate Contractor with the Work of the Contractor, who shall cooperate with them. The Contractor shall participate with any Separate Contractors and the Owner in reviewing their construction schedules. The Contractor shall make any revisions to its construction schedule deemed necessary after a joint review and mutual agreement. The construction schedules shall then constitute the schedules to be used by the Contractor, Separate Contractors, and the Owner until subsequently revised.

§ 6.1.4 Unless otherwise provided in the Contract Documents, when the Owner performs construction or operations related to the Project with the Owner's own forces or with Separate Contractors, the Owner or its Separate Contractors shall have the same obligations and rights that the Contractor has under the Conditions of the Contract, including, without excluding others, those stated in Article 3, this Article 6, and Articles 10, 11, and 12.

§ 6.2 Mutual Responsibility

§ 6.2.1 The Contractor shall afford the Owner and Separate Contractors reasonable opportunity for introduction and storage of their materials and equipment and performance of their activities, and shall connect and coordinate the Contractor's construction and operations with theirs as required by the Contract Documents.

§ 6.2.2 If part of the Contractor's Work depends for proper execution or results upon construction or operations by the Owner or a Separate Contractor, the Contractor shall, prior to proceeding with that portion of the Work, promptly

AIA Document A201® – 2017. Copyright © 1911, 1915, 1918, 1925, 1937, 1951, 1958, 1961, 1963, 1966, 1970, 1976, 1987, 1997, 2007 and 2017 by The American Institute of Architects. All rights reserved. The "American Institute of Architects," "AIA," the AIA Logo, "A201," and "AIA Contract Documents" are registered trademarks and may not be used without permission. This document was produced by AIA software at 11:08:54 ET on 03/18/2022 under Order No.2114262975 which expires on 12/03/2022, is not for resale, is licensed for one-time use only, and may only be used in accordance with the AIA Contract Documents® Terms of Service. To report copyright violations, e-mail copyright@aia.org.
User Notes: (944467505)

notify the Architect of apparent discrepancies or defects in the construction or operations by the Owner or Separate Contractor that would render it unsuitable for proper execution and results of the Contractor's Work. Failure of the Contractor to notify the Architect of apparent discrepancies or defects prior to proceeding with the Work shall constitute an acknowledgment that the Owner's or Separate Contractor's completed or partially completed construction is fit and proper to receive the Contractor's Work. The Contractor shall not be responsible for discrepancies or defects in the construction or operations by the Owner or Separate Contractor that are not apparent.

§ 6.2.3 The Contractor shall reimburse the Owner for costs the Owner incurs that are payable to a Separate Contractor because of the Contractor's delays, improperly timed activities or defective construction. The Owner shall be responsible to the Contractor for costs the Contractor incurs because of a Separate Contractor's delays, improperly timed activities, damage to the Work or defective construction.

§ 6.2.4 The Contractor shall promptly remedy damage that the Contractor wrongfully causes to completed or partially completed construction or to property of the Owner or Separate Contractor as provided in Section 10.2.5.

§ 6.2.5 The Owner and each Separate Contractor shall have the same responsibilities for cutting and patching as are described for the Contractor in Section 3.14.

§ 6.3 Owner's Right to Clean Up

If a dispute arises among the Contractor, Separate Contractors, and the Owner as to the responsibility under their respective contracts for maintaining the premises and surrounding area free from waste materials and rubbish, the Owner may clean up and the Architect will allocate the cost among those responsible.

ARTICLE 7 CHANGES IN THE WORK

§ 7.1 General

§ 7.1.1 Changes in the Work may be accomplished after execution of the Contract, and without invalidating the Contract, by Change Order, Construction Change Directive or order for a minor change in the Work, subject to the limitations stated in this Article 7 and elsewhere in the Contract Documents.

§ 7.1.2 A Change Order shall be based upon agreement among the Owner, Contractor, and Architect. A Construction Change Directive requires agreement by the Owner and Architect and may or may not be agreed to by the Contractor. An order for a minor change in the Work may be issued by the Architect alone.

§ 7.1.3 Changes in the Work shall be performed under applicable provisions of the Contract Documents. The Contractor shall proceed promptly with changes in the Work, unless otherwise provided in the Change Order, Construction Change Directive, or order for a minor change in the Work.

§ 7.2 Change Orders

§ 7.2.1 A Change Order is a written instrument prepared by the Contractor, which may be signed by the Owner, Contractor, and Architect stating their agreement upon all of the following:

.1 The change in the Work;
.2 The amount of the adjustment, if any, in the Contract Sum and General Conditions, if applicable; and
.3 The extent of the adjustment, if any, in the Contract Time.

If the Contractor is performing the Work through a sub-contractor, the maximum mark-up permitted by the sub-contractor shall be ten (10) percent and the maximum markup permitted by the General Contractor shall be five (5) percent. In the event that the Contractor is performing the Work with its own workforce, the maximum markup permitted by the General Contractor shall be ten (10) percent.

§ 7.3 Construction Change Directives

§ 7.3.1 A Construction Change Directive is a written order prepared by the Architect and signed by the Owner and Architect, directing a change in the Work prior to agreement on adjustment, if any, in the Contract Sum or Contract Time, or both. A Construction Change Directive shall be used in the absence of total agreement on the terms of a Change Order, which may include scope of Work and / or change order sum / price. The Owner may by Construction Change Directive, without invalidating the Contract, order changes in the Work within the general scope of the Contract consisting of additions, deletions, or other revisions, the Contract Sum and Contract Time being adjusted

AIA Document A201® – 2017. Copyright © 1911, 1915, 1918, 1925, 1937, 1951, 1958, 1961, 1963, 1966, 1970, 1976, 1987, 1997, 2007 and 2017 by The American Institute of Architects. All rights reserved. The "American Institute of Architects," "AIA," the AIA Logo, "A201," and "AIA Contract Documents" are registered trademarks and may not be used without permission. This document was produced by AIA software at 11:08:54 ET on 03/18/2022 under Order No.2114262975 which expires on 12/03/2022, is not for resale, is licensed for one-time use only, and may only be used in accordance with the AIA Contract Documents® Terms of Service. To report copyright violations, e-mail copyright@aia.org.
User Notes: (944467505)

accordingly. In the event that a Construction Change Directive is issued, the Contractor shall be required to perform as directed. Failure to perform as directed shall be considered a breach of contract by the Contractor.

§ 7.3.2 The Architect shall affix the scope and / or change order sum in the Construction Change Directive, which shall be signed by the Owner The Architect shall determine the adjustment on the basis of reasonable expenditures and savings of those performing the Work attributable to the change, including, in case of an increase in the Contract Sum. If the Contractor is performing the Work through a sub-contractor, the maximum mark-up permitted by the sub-contractor shall be ten (10) percent and the maximum markup permitted by the General Contractor shall be five (5) percent. In the event that the Contractor is performing the Work with its own workforce, the maximum markup permitted by the General Contractor shall be ten (10) percent.
In such case, the Contractor shall keep and present, in such form as the Architect may prescribe, an itemized accounting together with appropriate supporting data. Unless otherwise provided in the Contract Documents, costs for the purposes of this Section 7.3.2 shall be limited to the following:

.1 Costs of labor, including applicable payroll taxes, fringe benefits required by agreement or custom, workers' compensation insurance, and other employee costs approved by the Architect;

.2 Costs of materials, supplies, and equipment, including cost of transportation, whether incorporated or consumed;

.3 Rental costs of machinery and equipment, exclusive of hand tools, whether rented from the Contractor or others;

.4 Costs of premiums for all bonds and insurance only if over the contract base amount, permit fees, and sales, use, or similar taxes, directly related to the change; and

.5 Costs of supervision and field office personnel directly attributable to the change.

§ 7.3.3
(Paragraphs deleted)
Pending final determination of the total cost of a Construction Change Directive to the Owner, the Contractor may request payment for Work completed under the Construction Change Directive in Applications for Payment. The Architect will make an interim determination for purposes of monthly certification for payment for those costs and certify for payment the amount that the Architect determines, in the Architect's professional judgment, to be reasonably justified. The Architect's interim determination of cost shall adjust the Contract Sum on the same basis as a Change Order, subject to the right of either party to disagree and assert a Claim in accordance with Article 7.3.4 hereinafter or Article 15.

§ 7.3.4
(Paragraphs deleted)
Subsequent to the issuance of a Construction Change Directive, the Owner and Contractor shall negotiate in good faith to resolve the subject of the Construction Change Directive. If such good faith negotiations resolves the dispute, the agreed upon disputed scope of Work or Change Order Sum shall be set forth in a Change Order and signed by the Contractor, Architect and Owner. The signed Change Order shall then invalidate the Construction Change Directive. If such good faith negotiation shall not be successful, to resolve the scope of Work and / or change order sum, either party may seek resolution pursuant to Article 15 or initiate mediation or binding arbitration at any time for the specific issue at hand. The mediator or arbitrator shall be mutually agreed upon and said individual shall be a retired judge or have a background construction, engineering or architecture.

(Paragraphs deleted)
§ 7.4 Minor Changes in the Work
The Architect may order minor changes in the Work that are consistent with the intent of the Contract Documents and do not involve an adjustment in the Contract Sum or an extension of the Contract Time. The Architect's order for minor changes shall be in writing. If the Contractor believes that the proposed minor change in the Work will affect the Contract Sum or Contract Time, the Contractor shall notify the Architect and shall not proceed to implement the change in the Work. If the Contractor performs the Work set forth in the Architect's order for a minor change without prior notice to the Architect that such change will affect the Contract Sum or Contract Time, the Contractor waives any adjustment to the Contract Sum or extension of the Contract Time.

AIA Document A201® – 2017. Copyright © 1911, 1915, 1918, 1925, 1937, 1951, 1958, 1961, 1963, 1966, 1970, 1976, 1987, 1997, 2007 and 2017 by The American Institute of Architects. All rights reserved. The "American Institute of Architects," "AIA," the AIA Logo, "A201," and "AIA Contract Documents" are registered trademarks and may not be used without permission. This document was produced by AIA software at 11:08:54 ET on 03/18/2022 under Order No.2114262975 which expires on 12/03/2022, is not for resale, is licensed for one-time use only, and may only be used in accordance with the AIA Contract Documents® Terms of Service. To report copyright violations, e-mail copyright@aia.org.
User Notes: (944467505)

ARTICLE 8 TIME

§ 8.1 Definitions

§ 8.1.1 Unless otherwise provided, Contract Time is the period of time, including authorized adjustments, allotted in the Contract Documents for Substantial Completion of the Work.

§ 8.1.2 The date of commencement of the Work is the date established in the Agreement.

§ 8.1.3 The date of Substantial Completion is the date certified by the Architect in accordance with Section 9.8.

§ 8.1.4 The term "day" as used in the Contract Documents shall mean calendar day unless otherwise specifically defined.

§ 8.2 Progress and Completion

§ 8.2.1 Time limits stated in the Contract Documents are of the essence of the Contract. By the submission of a bid in response to a public advertisement, the Contractor confirms and accepts that the Contract Time is a reasonable period for performing the Work taking into consideration current conditions in the industry.

§ 8.2.2 The Contractor shall not knowingly, except by agreement or instruction of the Owner in writing, commence the Work prior to the effective date of insurance required to be furnished by the Contractor and Owner.

§ 8.2.3 The Contractor shall proceed expeditiously with adequate forces and shall achieve Substantial Completion within the Contract Time.

§ 8.3 Delays and Extensions of Time

§ 8.3.1 If the Contractor is delayed at any time in the commencement or progress of the Work by (1) an act or neglect of the Owner or Architect, of an employee of either, or of a Separate Contractor; (2) by changes ordered in the Work; (3) by labor disputes, fire, unusual delay in deliveries, unavoidable casualties, adverse weather conditions documented in accordance with Section 15.1.6.2, or other causes beyond the Contractor's control; (4) by delay authorized by the Owner pending mediation and binding dispute resolution; or (5) by other causes that the Contractor asserts, and the Architect determines, justify delay, then the Contract Time shall be extended for such reasonable time as the Architect may determine, but shall not include or allow for additional compensation related to such a time extension.

§ 8.3.2 Claims relating to time shall be made in accordance with applicable provisions of Article 15.

§ 8.3.3 This Section 8.3 does not preclude recovery of damages for delay by either party under other provisions of the Contract Documents.

§8.4 TIME OF COMPLETION - DELAY - LIQUIDATED DAMAGES

§8.4.1 In the event of the failure of the Contractor to substantially complete the said work, or any phase that has a substantial completion date, within the time stated in its Bid proposal, the Contractor shall be liable to the Owner in the sum of FIVE HUNDRED ($500.00) per day for each and every calendar day that the work remains incomplete in accordance with designated phased completions if applicable and/or final substantial completion. This sum shall be treated as liquidated damages (and not a penalty), provided, however, that the said liquidated damages shall be in addition to other consequential losses or damages that the Owner may incur by reason of such delay, such as, but not limited to, reasonable attorney's fees, all additional consequential Architectural and Engineering fees incurred including, but not necessarily limited to, additional design work, submittal reviews, correspondence, inspections, job meetings, reviewing applications for payment, punchlists, and similar services, etc. by the Owner after the scheduled date of substantial completion, other added costs of the project and the cost of furnishing temporary services, if any. Any such sums for which the Contractor is liable may be deducted by the Owner from any monies due or to become due to the Contractor.

ARTICLE 9 PAYMENTS AND COMPLETION

§ 9.1 Contract Sum

§ 9.1.1 The Contract Sum is stated in the Agreement and, including authorized adjustments, is the total amount payable by the Owner to the Contractor for performance of the Work under the Contract Documents. Provided that the

AIA Document A201® – 2017. Copyright © 1911, 1915, 1918, 1925, 1937, 1951, 1958, 1961, 1963, 1966, 1970, 1976, 1987, 1997, 2007 and 2017 by The American Institute of Architects. All rights reserved. The "American Institute of Architects," "AIA," the AIA Logo, "A201," and "AIA Contract Documents" are registered trademarks and may not be used without permission. This document was produced by AIA software at 11:08:54 ET on 03/18/2022 under Order No.2114262975 which expires on 12/03/2022, is not for resale, is licensed for one-time use only, and may only be used in accordance with the AIA Contract Documents® Terms of Service. To report copyright violations, e-mail copyright@aia.org.
User Notes: (944467505)

Contract is awarded within the time period set forth in the New Jersey Public Contracts Law, the Contractor shall be prohibited from submitting a change order or claim for price increases due to labor or material price escalation.

§ 9.1.2 If unit prices are stated in the Contract Documents or subsequently agreed upon, and if quantities originally contemplated are materially changed so that application of such unit prices to the actual quantities causes substantial inequity to the Owner or Contractor, the applicable unit prices shall be equitably adjusted.

§ 9.2 Schedule of Values

Where the Contract is based on a stipulated sum or Guaranteed Maximum Price, the Contractor shall submit a schedule of values to the Architect before the first Application for Payment, allocating the entire Contract Sum to the various portions of the Work. The schedule of values shall be prepared in the form, and supported by the data to substantiate its accuracy, required by the Architect. This schedule, unless objected to by the Architect, shall be used as a basis for reviewing the Contractor's Applications for Payment. Any changes to the schedule of values shall be submitted to the Architect and supported by such data to substantiate its accuracy as the Architect may require, and unless objected to by the Architect, shall be used as a basis for reviewing the Contractor's subsequent Applications for Payment. The Contractor is responsible for all Contract requirements as related to Plans and/or Specifications whether or not its dollar value is included on the approved Schedule of Values. The Contractor will proceed with the work as dictated by the Contract Documents. General Conditions shall be paid on the basis of percent project completion and not in equal monthly payments. General Conditions including, Field Supervision, Project Management, Project Office Administration, Field Office, temporary facilities, and any other indirect costs to the project shall be billed on the basis of percentage of project completion. Refer to paragraph 9.6.9.

§ 9.3 Applications for Payment

§ 9.3.1 At least ten days before the date established for each progress payment, the Contractor shall submit to the Architect an itemized Application for Payment prepared in accordance with the schedule of values, if required under Section 9.2, for completed portions of the Work. The application shall be notarized, if required, and supported by all data substantiating the Contractor's right to payment that the Owner or Architect require, such as copies of requisitions, and releases and waivers of liens from Subcontractors and suppliers, and shall reflect retainage if provided for in the Contract Documents.

§ 9.3.1.1 As provided in Section 7.3.9, such applications may include requests for payment on account of changes in the Work that have been properly authorized by Construction Change Directives, or by interim determinations of the Architect, but not yet included in Change Orders.

§ 9.3.1.2 Applications for Payment shall not include requests for payment for portions of the Work for which the Contractor does not intend to pay a Subcontractor or supplier, unless such Work has been performed by others whom the Contractor intends to pay.

§ 9.3.2 Unless otherwise provided in the Contract Documents, payments shall be made on account of materials and equipment delivered and suitably stored at the site for subsequent incorporation in the Work. The Contractor shall not be permitted to submit an Application for payment, which includes cost of material ordered and stored off-site.

§ 9.3.3 The Contractor warrants that title to all Work covered by an Application for Payment will pass to the Owner no later than the time of payment. The Contractor further warrants that upon submittal of an Application for Payment all Work for which Certificates for Payment have been previously issued and payments received from the Owner shall, to the best of the Contractor's knowledge, information, and belief, be free and clear of liens, claims, security interests, or encumbrances, in favor of the Contractor, Subcontractors, suppliers, or other persons or entities that provided labor, materials, and equipment relating to the Work.

§ 9.4 Certificates for Payment

§ 9.4.1 The Architect will, within seven days after receipt of the Contractor's Application for Payment, either (1) issue to the Owner a Certificate for Payment in the full amount of the Application for Payment, with a copy to the Contractor; or (2) issue to the Owner a Certificate for Payment for such amount as the Architect determines is properly due, and notify the Contractor and Owner of the Architect's reasons for withholding certification in part as provided in Section 9.5.1; or (3) withhold certification of the entire Application for Payment, and notify the Contractor and Owner of the Architect's reason for withholding certification in whole as provided in Section 9.5.1.

AIA Document A201® – 2017. Copyright © 1911, 1915, 1918, 1925, 1937, 1951, 1958, 1961, 1963, 1966, 1970, 1976, 1987, 1997, 2007 and 2017 by The American Institute of Architects. All rights reserved. The "American Institute of Architects," "AIA," the AIA Logo, "A201," and "AIA Contract Documents" are registered trademarks and may not be used without permission. This document was produced by AIA software at 11:08:54 ET on 03/18/2022 under Order No.2114262975 which expires on 12/03/2022, is not for resale, is licensed for one-time use only, and may only be used in accordance with the AIA Contract Documents® Terms of Service. To report copyright violations, e-mail copyright@aia.org.
User Notes: (944467505)

§ 9.4.2 The issuance of a Certificate for Payment will constitute a representation by the Architect to the Owner, based on the Architect's evaluation of the Work and the data in the Application for Payment, that, to the best of the Architect's knowledge, information, and belief, the Work has progressed to the point indicated, the quality of the Work is in accordance with the Contract Documents, and that the Contractor is entitled to payment in the amount certified. The foregoing representations are subject to an evaluation of the Work for conformance with the Contract Documents upon Substantial Completion, to results of subsequent tests and inspections, to correction of minor deviations from the Contract Documents prior to completion, and to specific qualifications expressed by the Architect. However, the issuance of a Certificate for Payment will not be a representation that the Architect has (1) made exhaustive or continuous on-site inspections to check the quality or quantity of the Work; (2) reviewed construction means, methods, techniques, sequences, or procedures; (3) reviewed copies of requisitions received from Subcontractors and suppliers and other data requested by the Owner to substantiate the Contractor's right to payment; or (4) made examination to ascertain how or for what purpose the Contractor has used money previously paid on account of the Contract Sum.

§ 9.5 Decisions to Withhold Certification

§ 9.5.1 The Architect may withhold a Certificate for Payment in whole or in part, to the extent reasonably necessary to protect the Owner, if in the Architect's opinion the representations to the Owner required by Section 9.4.2 cannot be made. If the Architect is unable to certify payment in the amount of the Application, the Architect will notify the Contractor and Owner as provided in Section 9.4.1. If the Contractor and Architect cannot agree on a revised amount, the Architect will promptly issue a Certificate for Payment for the amount for which the Architect is able to make such representations to the Owner. The Architect may also withhold a Certificate for Payment or, because of subsequently discovered evidence, may nullify the whole or a part of a Certificate for Payment previously issued, to such extent as may be necessary in the Architect's opinion to protect the Owner from loss for which the Contractor is responsible, including loss resulting from acts and omissions described in Section 3.3.2, because of

- **.1** defective Work not remedied;
- **.2** third party claims filed or reasonable evidence indicating probable filing of such claims, unless security acceptable to the Owner is provided by the Contractor;
- **.3** failure of the Contractor to make payments properly to Subcontractors or suppliers for labor, materials or equipment;
- **.4** reasonable evidence that the Work cannot be completed for the unpaid balance of the Contract Sum;
- **.5** damage to the Owner or a Separate Contractor;
- **.6** reasonable evidence that the Work will not be completed within the Contract Time, and that the unpaid balance would not be adequate to cover actual or liquidated damages for the anticipated delay; or
- **.7** repeated failure to carry out the Work in accordance with the Contract Documents.
- **.8** failure to provide schedule update with every payment applications.

§ 9.5.2 When either party disputes the Architect's decision regarding a Certificate for Payment under Section 9.5.1, in whole or in part, that party may submit a Claim in accordance with Article 15.

§ 9.5.3 When the reasons for withholding certification are removed, certification will be made for amounts previously withheld.

§ 9.5.4 If the Architect withholds certification for payment under Section 9.5.1.3, the Owner may, at its sole option, issue joint checks to the Contractor and to any Subcontractor or supplier to whom the Contractor failed to make payment for Work properly performed or material or equipment suitably delivered. If the Owner makes payments by joint check, the Owner shall notify the Architect and the Contractor shall reflect such payment on its next Application for Payment.

§ 9.6 Progress Payments

§ 9.6.1 After the Architect has issued a Certificate for Payment, the Owner shall make payment in the manner and within the time provided in the Contract Documents, and shall so notify the Architect.

§ 9.6.2 The Contractor shall pay each Subcontractor, no later than seven days after receipt of payment from the Owner, the amount to which the Subcontractor is entitled, reflecting percentages actually retained from payments to the Contractor on account of the Subcontractor's portion of the Work. The Contractor shall, by appropriate agreement with each Subcontractor, require each Subcontractor to make payments to Sub-subcontractors in a similar manner.

AIA Document A201® – 2017. Copyright © 1911, 1915, 1918, 1925, 1937, 1951, 1958, 1961, 1963, 1966, 1970, 1976, 1987, 1997, 2007 and 2017 by The American Institute of Architects. All rights reserved. The "American Institute of Architects," "AIA," the AIA Logo, "A201," and "AIA Contract Documents" are registered trademarks and may not be used without permission. This document was produced by AIA software at 11:08:54 ET on 03/18/2022 under Order No.2114262975 which expires on 12/03/2022, is not for resale, is licensed for one-time use only, and may only be used in accordance with the AIA Contract Documents® Terms of Service. To report copyright violations, e-mail copyright@aia.org.
User Notes: (944467505)

§ 9.6.3 The Architect will, on request, furnish to a Subcontractor, if practicable, information regarding percentages of completion or amounts applied for by the Contractor and action taken thereon by the Architect and Owner on account of portions of the Work done by such Subcontractor.

§ 9.6.4 The Owner has the right to request written evidence from the Contractor that the Contractor has properly paid Subcontractors and suppliers amounts paid by the Owner to the Contractor for subcontracted Work. If the Contractor fails to furnish such evidence within seven days, the Owner shall have the right to contact Subcontractors and suppliers to ascertain whether they have been properly paid. Neither the Owner nor Architect shall have an obligation to pay, or to see to the payment of money to, a Subcontractor or supplier, except as may otherwise be required by law.

§ 9.6.5 The Contractor's payments to suppliers shall be treated in a manner similar to that provided in Sections 9.6.2, 9.6.3 and 9.6.4.

§ 9.6.6 A Certificate for Payment, a progress payment, or partial or entire use or occupancy of the Project by the Owner shall not constitute acceptance of Work not in accordance with the Contract Documents.

§ 9.6.7 Unless the Contractor provides the Owner with a payment bond in the full penal sum of the Contract Sum, payments received by the Contractor for Work properly performed by Subcontractors or provided by suppliers shall be held by the Contractor for those Subcontractors or suppliers who performed Work or furnished materials, or both, under contract with the Contractor for which payment was made by the Owner. Nothing contained herein shall require money to be placed in a separate account and not commingled with money of the Contractor, create any fiduciary liability or tort liability on the part of the Contractor for breach of trust, or entitle any person or entity to an award of punitive damages against the Contractor for breach of the requirements of this provision.

§ 9.6.8 Provided the Owner has fulfilled its payment obligations under the Contract Documents, the Contractor shall defend and indemnify the Owner from all loss, liability, damage or expense, including reasonable attorney's fees and litigation expenses, arising out of any lien claim or other claim for payment by any Subcontractor or supplier of any tier. Upon receipt of notice of a lien claim or other claim for payment, the Owner shall notify the Contractor. If approved by the applicable court, when required, the Contractor may substitute a surety bond for the property against which the lien or other claim for payment has been asserted. This provision shall survive the termination of the Agreement or the conclusion of the Agreement as may be applicable.

§ 9.6.9 All progress payments allocated to General Conditions, Supervision, Project Management, Administrative Fees, shall be based on a percentage of completion and tied to the initially submitted baseline schedule, as may be adjusted by Contractor for which the Owner has accepted. Monies for the foregoing shall not be prorated on a monthly basis.

§ 9.7 Failure of Payment

If the Architect does not issue a Certificate for Payment, through no fault of the Contractor, within seven days after receipt of the Contractor's Application for Payment, or if the Owner does not pay the Contractor within seven days after the date established in the Contract Documents, the amount certified by the Architect or awarded by binding dispute resolution, then the Contractor may, upon seven additional days' notice to the Owner and Architect, stop the Work until payment of the amount owing has been received. The Contract Time shall be extended appropriately and the Contract Sum shall be increased by the amount of the Contractor's reasonable costs of shutdown, delay and start-up, plus interest as provided for in the Contract Documents.

§ 9.8 Substantial Completion

§ 9.8.1 Substantial Completion is the stage in the progress of the Work when the Work or designated portion thereof is sufficiently complete in accordance with the Contract Documents so that the Owner can occupy or utilize the Work for its intended use. Substantial completion would be the date that a municipal authority issues a temporary certificate of occupancy.

§ 9.8.2 When the Contractor considers that the Work, or a portion thereof which the Owner agrees to accept separately, is substantially complete, the Contractor shall prepare and submit to the Architect a comprehensive list of items to be completed or corrected prior to final payment. Failure to include an item on such list does not alter the responsibility of the Contractor to complete all Work in accordance with the Contract Documents.

AIA Document A201® – 2017. Copyright © 1911, 1915, 1918, 1925, 1937, 1951, 1958, 1961, 1963, 1966, 1970, 1976, 1987, 1997, 2007 and 2017 by The American Institute of Architects. All rights reserved. The "American Institute of Architects," "AIA," the AIA Logo, "A201," and "AIA Contract Documents" are registered trademarks and may not be used without permission. This document was produced by AIA software at 11:08:54 ET on 03/18/2022 under Order No.2114262975 which expires on 12/03/2022, is not for resale, is licensed for one-time use only, and may only be used in accordance with the AIA Contract Documents® Terms of Service. To report copyright violations, e-mail copyright@aia.org.
User Notes: (944467505)

§ 9.8.3 Upon receipt of the Contractor's list, the Architect will make an inspection to determine whether the Work or designated portion thereof is substantially complete. If the Architect's inspection discloses any item, whether or not included on the Contractor's list, which is not sufficiently complete in accordance with the Contract Documents so that the Owner can occupy or utilize the Work or designated portion thereof for its intended use, the Contractor shall, before issuance of the Certificate of Substantial Completion, complete or correct such item upon notification by the Architect. In such case, the Contractor shall then submit a request for another inspection by the Architect to determine Substantial Completion.

§ 9.8.4 When the Work or designated portion thereof is substantially complete, the Architect will prepare a Certificate of Substantial Completion that shall establish the date of Substantial Completion; establish responsibilities of the Owner and Contractor for security, maintenance, heat, utilities, damage to the Work and insurance; and fix the time within which the Contractor shall finish all items on the list accompanying the Certificate. Warranties required by the Contract Documents shall commence on the date of Substantial Completion of the Work or designated portion thereof unless otherwise provided in the Certificate of Substantial Completion.

§ 9.8.5 The Certificate of Substantial Completion shall be submitted to the Owner and Contractor for their written acceptance of responsibilities assigned to them in the Certificate. Upon such acceptance, and consent of surety if any, the Owner shall make payment of retainage applying to the Work or designated portion thereof. Such payment shall be adjusted for Work that is incomplete or not in accordance with the requirements of the Contract Documents.

§ 9.9 Partial Occupancy or Use

§ 9.9.1 The Owner may occupy or use any completed or partially completed portion of the Work at any stage when such portion is designated by separate agreement with the Contractor, provided such occupancy or use is consented to by the insurer and authorized by public authorities having jurisdiction over the Project. Such partial occupancy or use may commence whether or not the portion is substantially complete, provided the Owner and Contractor have accepted in writing the responsibilities assigned to each of them for payments, retainage, if any, security, maintenance, heat, utilities, damage to the Work and insurance, and have agreed in writing concerning the period for correction of the Work and commencement of warranties required by the Contract Documents. When the Contractor considers a portion substantially complete, the Contractor shall prepare and submit a list to the Architect as provided under Section 9.8.2. Consent of the Contractor to partial occupancy or use shall not be unreasonably withheld. The stage of the progress of the Work shall be determined by written agreement between the Owner and Contractor or, if no agreement is reached, by decision of the Architect.

§ 9.9.2 Immediately prior to such partial occupancy or use, the Owner, Contractor, and Architect shall jointly inspect the area to be occupied or portion of the Work to be used in order to determine and record the condition of the Work.

§ 9.9.3 Unless otherwise agreed upon, partial occupancy or use of a portion or portions of the Work shall not constitute acceptance of Work not complying with the requirements of the Contract Documents.

§ 9.10 Final Completion and Final Payment

§ 9.10.1 Upon receipt of the Contractor's notice that the Work is ready for final inspection and acceptance and upon receipt of a final Application for Payment, the Architect will promptly make such inspection. When the Architect finds the Work acceptable under the Contract Documents and the Contract fully performed, the Architect will promptly issue a final Certificate for Payment stating that to the best of the Architect's knowledge, information and belief, and on the basis of the Architect's on-site visits and inspections, the Work has been completed in accordance with the Contract Documents and that the entire balance found to be due the Contractor and noted in the final Certificate is due and payable. The Architect's final Certificate for Payment will constitute a further representation that conditions listed in Section 9.10.2 as precedent to the Contractor's being entitled to final payment have been fulfilled.

§ 9.10.2 Neither final payment nor any remaining retained percentage shall become due until the Contractor submits to the Architect (1) an affidavit that payrolls, bills for materials and equipment, and other indebtedness connected with the Work for which the Owner or the Owner's property might be responsible or encumbered (less amounts withheld by Owner) have been paid or otherwise satisfied, (2) a certificate evidencing that insurance required by the Contract Documents to remain in force after final payment is currently in effect, (3) a written statement that the Contractor knows of no reason that the insurance will not be renewable to cover the period required by the Contract Documents, (4) consent of surety, if any, to final payment, (5) documentation of any special warranties, such as manufacturers'

AIA Document A201® – 2017. Copyright © 1911, 1915, 1918, 1925, 1937, 1951, 1958, 1961, 1963, 1966, 1970, 1976, 1987, 1997, 2007 and 2017 by The American Institute of Architects. All rights reserved. The "American Institute of Architects," "AIA," the AIA Logo, "A201," and "AIA Contract Documents" are registered trademarks and may not be used without permission. This document was produced by AIA software at 11:08:54 ET on 03/18/2022 under Order No.2114262975 which expires on 12/03/2022, is not for resale, is licensed for one-time use only, and may only be used in accordance with the AIA Contract Documents® Terms of Service. To report copyright violations, e-mail copyright@aia.org.
User Notes: (944467505)

warranties or specific Subcontractor warranties, and (6) if required by the Owner, other data establishing payment or satisfaction of obligations, such as receipts and releases and waivers of liens, claims, security interests, or encumbrances arising out of the Contract, to the extent and in such form as may be designated by the Owner. If a Subcontractor refuses to furnish a release or waiver required by the Owner, the Contractor may furnish a bond satisfactory to the Owner to indemnify the Owner against such lien, claim, security interest, or encumbrance. If a lien, claim, security interest, or encumbrance remains unsatisfied after payments are made, the Contractor shall refund to the Owner all money that the Owner may be compelled to pay in discharging the lien, claim, security interest, or encumbrance, including all costs and reasonable attorneys' fees.

§ 9.10.3 If, after Substantial Completion of the Work, final completion thereof is materially delayed through no fault of the Contractor or by issuance of Change Orders affecting final completion, and the Architect so confirms, the Owner shall, upon application by the Contractor and certification by the Architect, and without terminating the Contract, make payment of the balance due for that portion of the Work fully completed, corrected, and accepted. If the remaining balance for Work not fully completed or corrected is less than retainage stipulated in the Contract Documents, and if bonds have been furnished, the written consent of the surety to payment of the balance due for that portion of the Work fully completed and accepted shall be submitted by the Contractor to the Architect prior to certification of such payment. Such payment shall be made under terms and conditions governing final payment, except that it shall not constitute a waiver of Claims.

§ 9.10.4 The making of final payment shall constitute a waiver of Claims by the Owner except those arising from

- **.1** liens, Claims, security interests, or encumbrances arising out of the Contract and unsettled;
- **.2** failure of the Work to comply with the requirements of the Contract Documents;
- **.3** terms of special warranties required by the Contract Documents; or
- **.4** audits performed by the Owner, if permitted by the Contract Documents, after final payment.

§ 9.10.5 Acceptance of final payment by the Contractor, a Subcontractor, or a supplier, shall constitute a waiver of claims by that payee except those previously made in writing and identified by that payee as unsettled at the time of final Application for Payment.

ARTICLE 10 PROTECTION OF PERSONS AND PROPERTY

§ 10.1 Safety Precautions and Programs

The Contractor shall be responsible for initiating, maintaining, and supervising all safety precautions and programs in connection with the performance of the Contract.

§ 10.2 Safety of Persons and Property

§ 10.2.1 The Contractor shall take reasonable precautions for safety of, and shall provide reasonable protection to prevent damage, injury, or loss to

- **.1** employees on the Work and other persons who may be affected thereby;
- **.2** the Work and materials and equipment to be incorporated therein, whether in storage on or off the site, under care, custody, or control of the Contractor, a Subcontractor, or a Sub-subcontractor; and
- **.3** other property at the site or adjacent thereto, such as trees, shrubs, lawns, walks, pavements, roadways, structures, and utilities not designated for removal, relocation, or replacement in the course of construction.

§ 10.2.2 The Contractor shall comply with, and give notices required by applicable laws, statutes, ordinances, codes, rules and regulations, and lawful orders of public authorities, bearing on safety of persons or property or their protection from damage, injury, or loss.

§ 10.2.3 The Contractor shall implement, erect, and maintain, as required by existing conditions and performance of the Contract, reasonable safeguards for safety and protection, including posting danger signs and other warnings against hazards; promulgating safety regulations; and notifying the owners and users of adjacent sites and utilities of the safeguards.

§ 10.2.4 When use or storage of explosives or other hazardous materials or equipment, or unusual methods are necessary for execution of the Work, the Contractor shall exercise utmost care and carry on such activities under supervision of properly qualified personnel.

AIA Document A201® – 2017. Copyright © 1911, 1915, 1918, 1925, 1937, 1951, 1958, 1961, 1963, 1966, 1970, 1976, 1987, 1997, 2007 and 2017 by The American Institute of Architects. All rights reserved. The "American Institute of Architects," "AIA," the AIA Logo, "A201," and "AIA Contract Documents" are registered trademarks and may not be used without permission. This document was produced by AIA software at 11:08:54 ET on 03/18/2022 under Order No.2114262975 which expires on 12/03/2022, is not for resale, is licensed for one-time use only, and may only be used in accordance with the AIA Contract Documents® Terms of Service. To report copyright violations, e-mail copyright@aia.org.
User Notes: (944467505)

§ 10.2.5 The Contractor shall promptly remedy damage and loss (other than damage or loss insured under property insurance required by the Contract Documents) to property referred to in Sections 10.2.1.2 and 10.2.1.3 caused in whole or in part by the Contractor, a Subcontractor, a Sub-subcontractor, or anyone directly or indirectly employed by any of them, or by anyone for whose acts they may be liable and for which the Contractor is responsible under Sections 10.2.1.2 and 10.2.1.3. The Contractor may make a Claim for the cost to remedy the damage or loss to the extent such damage or loss is attributable to acts or omissions of the Owner or Architect or anyone directly or indirectly employed by either of them, or by anyone for whose acts either of them may be liable, and not attributable to the fault or negligence of the Contractor. The foregoing obligations of the Contractor are in addition to the Contractor's obligations under Section 3.18.

§ 10.2.6 The Contractor shall designate a responsible member of the Contractor's organization at the site whose duty shall be the prevention of accidents. This person shall be the Contractor's superintendent unless otherwise designated by the Contractor in writing to the Owner and Architect.

§ 10.2.7 The Contractor shall not permit any part of the construction or site to be loaded so as to cause damage or create an unsafe condition.

§ 10.2.8 Injury or Damage to Person or Property
If either party suffers injury or damage to person or property because of an act or omission of the other party, or of others for whose acts such party is legally responsible, notice of the injury or damage, whether or not insured, shall be given to the other party within a reasonable time not exceeding 21 days after discovery. The notice shall provide sufficient detail to enable the other party to investigate the matter.

§ 10.3 Hazardous Materials and Substances
§ 10.3.1 The Contractor is responsible for compliance with any requirements included in the Contract Documents regarding hazardous materials or substances. If the Contractor encounters a hazardous material or substance not addressed in the Contract Documents and if reasonable precautions will be inadequate to prevent foreseeable bodily injury or death to persons resulting from a material or substance, including but not limited to asbestos or polychlorinated biphenyl (PCB), encountered on the site by the Contractor, the Contractor shall, upon recognizing the condition, immediately stop Work in the affected area and notify the Owner and Architect of the condition.

§ 10.3.2 Upon receipt of the Contractor's notice, the Owner shall obtain the services of a licensed laboratory to verify the presence or absence of the material or substance reported by the Contractor and, in the event such material or substance is found to be present, to cause it to be rendered harmless. Unless otherwise required by the Contract Documents, the Owner shall furnish in writing to the Contractor and Architect the names and qualifications of persons or entities who are to perform tests verifying the presence or absence of the material or substance or who are to perform the task of removal or safe containment of the material or substance. The Contractor and the Architect will promptly reply to the Owner in writing stating whether or not either has reasonable objection to the persons or entities proposed by the Owner. If either the Contractor or Architect has an objection to a person or entity proposed by the Owner, the Owner shall propose another to whom the Contractor and the Architect have no reasonable objection. When the material or substance has been rendered harmless, Work in the affected area shall resume upon written agreement of the Owner and Contractor. By Change Order, the Contract Time shall be extended appropriately and the Contract Sum shall be increased by the amount of the Contractor's reasonable additional costs of shutdown, delay, and start-up.

§ 10.3.3 To the fullest extent permitted by law, the Owner shall indemnify and hold harmless the Contractor, Subcontractors, Architect, Architect's consultants, and agents and employees of any of them from and against claims, damages, losses, and expenses, including but not limited to attorneys' fees, arising out of or resulting from performance of the Work in the affected area if in fact the material or substance presents the risk of bodily injury or death as described in Section 10.3.1 and has not been rendered harmless, provided that such claim, damage, loss, or expense is attributable to bodily injury, sickness, disease or death, or to injury to or destruction of tangible property (other than the Work itself), except to the extent that such damage, loss, or expense is due to the fault or negligence of the party seeking indemnity.

§ 10.3.4 The Owner shall not be responsible under this Section 10.3 for hazardous materials or substances the Contractor brings to the site unless such materials or substances are required by the Contract Documents. The Owner

AIA Document A201® – 2017. Copyright © 1911, 1915, 1918, 1925, 1937, 1951, 1958, 1961, 1963, 1966, 1970, 1976, 1987, 1997, 2007 and 2017 by The American Institute of Architects. All rights reserved. The "American Institute of Architects," "AIA," the AIA Logo, "A201," and "AIA Contract Documents" are registered trademarks and may not be used without permission. This document was produced by AIA software at 11:08:54 ET on 03/18/2022 under Order No.2114262975 which expires on 12/03/2022, is not for resale, is licensed for one-time use only, and may only be used in accordance with the AIA Contract Documents® Terms of Service. To report copyright violations, e-mail copyright@aia.org.
User Notes: (944467505)

shall be responsible for hazardous materials or substances required by the Contract Documents, except to the extent of the Contractor's fault or negligence in the use and handling of such materials or substances.

§ 10.3.5 The Contractor shall reimburse the Owner for the cost and expense the Owner incurs (1) for remediation of hazardous materials or substances the Contractor brings to the site and negligently handles, or (2) where the Contractor fails to perform its obligations under Section 10.3.1, except to the extent that the cost and expense are due to the Owner's fault or negligence.

§ 10.3.6 If, without negligence on the part of the Contractor, the Contractor is held liable by a government agency for the cost of remediation of a hazardous material or substance solely by reason of performing Work as required by the Contract Documents, the Owner shall reimburse the Contractor for all cost and expense thereby incurred.

§ 10.4 Emergencies
In an emergency affecting safety of persons or property, the Contractor shall act, at the Contractor's discretion, to prevent threatened damage, injury, or loss. Additional compensation or extension of time claimed by the Contractor on account of an emergency shall be determined as provided in Article 15 and Article 7.

ARTICLE 11 INSURANCE AND BONDS
§ 11.1 Contractor's Insurance and Bonds

(Paragraphs deleted)
§ 11.1 GENERAL REQUIREMENTS
All insurance coverage procured by the Contract6or shall be provided by insurance companies having policyholder ratings no lower than "A-" and financial ratings now lower than "X11" in the Best's Insurance Guide, latest edition in effect at of the date of the Contract and subsequently in effect at the time of renewal of any policies required by the Contract Documents.

If the Owner is damaged by the failure of the Contractor to purchase or maintain the insurance required of the Contractor under Article 11, the Contractor shall in addition to all other remedies provided to the Owner in the Contract Documents by the reason of default by the Contractor, be responsible to the Owner for all costs, damages, fees, and expenses (also including to have been purchased or maintained by the Contractor.

§ 11.1 The Contractor shall purchase from and maintain in a company or companies lawfully authorized to do business in the jurisdiction in which the Project is located such insurance as will protect the Contractor from claims set forth below which may arise out of or result from the Contractor's operations and completed operations under the Contract and for which the Contractor may be legally liable, whether such operations be by the Contractor or by a Subcontractor or by anyone directly or indirectly employed by any of them, or by anyone for whose acts any of them may be liable:

1. Claims under workers compensation, disability benefit and other similar employee benefit acts which are applicable to the Work to be performed, including private entities performing Work at the site and exempt from the coverage on account of number of employees or occupation, which entities shall maintain voluntary compensation coverage at the same limits specified for mandatory coverage for the duration of the Project;
2. Claims for damages because of bodily injury, sickness or disease, or death of the Contractor's employees;
3. Claims for damages because of bodily injury, sickness or disease, or death of any person other than the Contractor's employees or persons or entities excluded by statute from the requirements of Clause 11.1.1.1 but required by the Contract Documents to provide the insurance required by that Clause;
4. Claims for damages insured by usual personal injury liability coverage which are sustained (1) by a person as a result of an offence directly or indirectly related to employment of such person by the Contractor, or (2) by another person;
5. Claims for damages, other than to the Work itself, because of injury to or destruction of tangible property, including loss of use resulting therefrom;
6. Claims for damages because of bodily injury, death of a person or property damage arising out of ownership, maintenance or use of motor vehicle;
7. Claims for bodily injury or property damage arising out of the completed operations; and

AIA Document A201® – 2017. Copyright © 1911, 1915, 1918, 1925, 1937, 1951, 1958, 1961, 1963, 1966, 1970, 1976, 1987, 1997, 2007 and 2017 by The American Institute of Architects. All rights reserved. The "American Institute of Architects," "AIA," the AIA Logo, "A201," and "AIA Contract Documents" are registered trademarks and may not be used without permission. This document was produced by AIA software at 11:08:54 ET on 03/18/2022 under Order No.2114262975 which expires on 12/03/2022, is not for resale, is licensed for one-time use only, and may only be used in accordance with the AIA Contract Documents® Terms of Service. To report copyright violations, e-mail copyright@aia.org.
User Notes: (944467505)

8. Claims involving contractual liability insurance applicable to the Contractor's obligations under Section 3.18.

All Certificates of Insurance satisfactory to the Owner, shall be filed with the Owner within seven (7) days of the issuance of the contract. Each Prime Contractor's insurance coverage shall contain a clause indemnifying and saving harmless the Owner, the Architect, and their agents from any and all liability of whatever nature arising from the Work to be performed under the Contract, including Attorneys' fees and costs, in connection with the defense of such claims. The Certificate of Insurance furnished by the Contractor shall specify that the above indemnification is guaranteed by the policy.

§ 11.2 The insurance required by Section 11.1.1 shall be written for not less than limits of liability specified in the Contract Documents or required by law, whichever coverage is greater. Coverages, whether written on an occurrence or claims-made basis, shall be maintained without interruption from the date of commencement of the Work until the date of final payment and termination of any coverage required to be maintained after final payment, and, with respect to the Contractor's completed operations coverage, until the expiration of the period for correction of Work or for such other period for maintenance of completed operations coverage as specified in the Contract Documents.

§ 11.3 The Contractor shall, for the protection and benefit of the Indemnities and the Contractor and as part of the Contractor's efforts to satisfy the obligations set forth in Paragraph 11.1.1, procure, pay for and maintain in full force and effect at all times during the performance of the Work until Final Acceptance of the Work or for such duration as required, policies of insurance issued by the responsible carrier or carriers acceptable to the Owner, and in form and substance reasonably satisfactory to the Owner, which afford the coverages set forth in the Contract Agreement.

1. Workers Compensation Insurance: The Owner and all the Contracted parties are required to maintain Worker's Compensation Insurance in accordance with the laws of the State of New Jersey.

Worker's Compensation:	Statutory
Employer's Liability, each accident	$500,000.00

2. Commercial General Liability Insurance: The Owner and the all Contracted parties are required to comprehensive general liability insurance, covering any and all bodily and property damage arising out of or in connection with the work performed hereunder. The policy shall include coverage for contractual liability, products / completed operations, explosion and collapse and underground operations. The policy shall name the Owner and Architect as additional insured.

   The Contractor shall either (i) require each of its subcontractor's to procure and maintain during the life of its subcontracts, Subcontractor Liability Insurance of the type and same amounts herein; or (ii) insure the activities of their Subcontractors under their respective policies.

General Aggregate:	$2,000,000.00
Aggregate per project	$2,000,000.00
Aggregate per Location	$2,000,000.00
Products and Completion Operations	$2,000,000.00
Personal Injury	$1,000,000.00
Each Occurrence	$1,000,000.00

3. Comprehensive Automobile Liability Insurance: All Contracted parties are required to maintain Comprehensive Automobile Liability Insurance for coverage of any and all owed, non-owned, hired or borrowed vehicles, covering bodily injury and property damage.
   The policy shall name the Owner and Architects as additional insured.

Combined Single Limit:	$1,000,000.00

4. Excess Liability including aggregate per project and aggregate per location extensions.

Each Occurrence	$5,000,000.00

AIA Document A201® – 2017. Copyright © 1911, 1915, 1918, 1925, 1937, 1951, 1958, 1961, 1963, 1966, 1970, 1976, 1987, 1997, 2007 and 2017 by The American Institute of Architects. All rights reserved. The "American Institute of Architects," "AIA," the AIA Logo, "A201," and "AIA Contract Documents" are registered trademarks and may not be used without permission. This document was produced by AIA software at 11:08:54 ET on 03/18/2022 under Order No.2114262975 which expires on 12/03/2022, is not for resale, is licensed for one-time use only, and may only be used in accordance with the AIA Contract Documents® Terms of Service. To report copyright violations, e-mail copyright@aia.org.
User Notes: (944467505)

Aggregate	$5,000,000.00
Aggregate per Project / Location	$5,000,000.00

§ 11.1.4 The Contractor hereby agrees to deliver to the Owner, within seven (7) days of the date of the issuance of the Contract and prior to any equipment of personnel being brought onto the site of the Work or the Project site, certified copies of all insurance policies procured by the Contractor under or pursuant this Paragraph 11.1 or, with consent of the Owner, Certificates of Insurance in form and substance satisfactory to the Architect, and Owner evidencing the required coverages with limits not less than those specified in this Section, Paragraph 11.1.2. The coverage afforded under any insurance policy obtained under or pursuant this Paragraph 11.1 shall be primary to any valid and collectible insurance carried separately by any of the Indemnities. The Contractor's indemnification obligations contained in Section 3.18 shall apply irrespective of any applicable insurance coverage. Further, all policies and Certificates of Insurance shall expressly provide that not less than thirty (3) days' prior written notice of certified mail shall be given the Owner in the event of material alteration, cancellation, non-renewal, or expiration of the coverage contained in such policy of evidenced such certified copy of Certificate of Insurance.

§ 11.1.5 If the Contractor fails to purchase and maintain, or require to be purchased and maintained, any insurance required under this paragraph 11.1, Owner may, but shall not be obligated to, upon five (5) day's written notice to the Contractor, purchase such insurance on behalf of the Contractor and shall be entitled to be reimbursed by the Contractor upon demand, which amount at the Owner's election may be deducted from the initial payment application as a deduction from and a credit against the total contract sum.

§ 11.1.6 Any aggregate limit under the Contractor's liability insurance shall, by endorsement, apply to this Project separately. The Contractor shall indemnify and hold the Owner and the Architects and all of their agents and employees harmless from and against any and all claims, damages, losses and expenses, including attorneys feed, arising out of, resulting from or in connection with the project, which are caused by any error, omission, negligent or willful act of the Contractor, his agents and employees and any subcontractor that the Contractor may employ.

§ 11.1.7 The Owner and Architect may defend themselves, at the Contractor's expense, from any claim of lawsuit which may arise out of the Contractor's or Subcontractor's performance or lack of performance under the terms of this contract or they may elect to have the Contractor provide them with legal representation at the Contractor's own expense.

§ 11.1.8 Certificates of insurance acceptable to the Owner shall be filed with the Owner prior to commencement of the Work and thereafter upon renewal or replacement of each required policy of insurance. These certificates and the insurance policies required by this Section 11.1 shall contain a provision that coverages afforded under the policies will be canceled or allowed to expire until at least 30 days' prior written notice has been given to the Owner. An additional certificate evidencing continuation of liability coverage, including coverage for completed operations, shall be submitted with the final Application for Payment as required by Section 9.10.2 and thereafter upon renewal or replacement of such coverage until the expiration of the time required by Section 11.1.2. Information concerning reduction of coverage on account of revised limits or claims paid under the General Aggregate, or both, shall be furnished by the Contractor with reasonable promptness.

§ 11.1.9 The Contractor shall cause the commercial liability coverage required by the Contract Documents to include (1) the Owner, the Architect and Architect's consultants as additional insureds for claims caused in whole or in part by the Contractor's negligent acts or omissions during the Contractor's operations; and (2) the Owner as an additional insured for claims caused in whole or in part by the Contractor's negligent acts or omissions during the Contractor's completed operations.

§ 11.1.10 The Contractor shall provide surety bonds of the types, for such penal sums, and subject to such terms and conditions as required by the Contract Documents or pursuant to the Local Public Contracts Law. The Contractor shall purchase and maintain the required bonds from a company or companies lawfully authorized to issue surety bonds in the jurisdiction where the Project is located.

§ 11.1.11 Upon the request of any person or entity appearing to be a potential beneficiary of bonds covering payment of obligations arising under the Contract, the Contractor shall promptly furnish a copy of the bonds or shall authorize a copy to be furnished.

AIA Document A201® – 2017. Copyright © 1911, 1915, 1918, 1925, 1937, 1951, 1958, 1961, 1963, 1966, 1970, 1976, 1987, 1997, 2007 and 2017 by The American Institute of Architects. All rights reserved. The "American Institute of Architects," "AIA," the AIA Logo, "A201," and "AIA Contract Documents" are registered trademarks and may not be used without permission. This document was produced by AIA software at 11:08:54 ET on 03/18/2022 under Order No.2114262975 which expires on 12/03/2022, is not for resale, is licensed for one-time use only, and may only be used in accordance with the AIA Contract Documents® Terms of Service. To report copyright violations, e-mail copyright@aia.org.
User Notes: (944467505)

§ 11.1.12 Notice of Cancellation or Expiration of Contractor's Required Insurance. Within three (3) business days of the date the Contractor becomes aware of an impending or actual cancellation or expiration of any insurance required by the Contract Documents, the Contractor shall provide notice to the Owner of such impending or actual cancellation or expiration. Upon receipt of notice from the Contractor, the Owner shall, unless the lapse in coverage arises from an act or omission of the Owner, have the right to stop the Work until the lapse in coverage has been cured by the procurement of replacement coverage by the Contractor. The furnishing of notice by the Contractor shall not relieve the Contractor of any contractual obligation to provide any required coverage.

§ 11.2 Owner's Insurance

§ 11.2.1 The Owner shall maintain insurance of the types and limits of liability it deems appropriate on the Property. The Owner shall purchase and maintain the required insurance from an insurance company or insurance companies lawfully authorized to issue insurance in the jurisdiction where the Project is located.

§ 11.2.2 Failure to Purchase Required Property Insurance. If the Owner fails to purchase and maintain the property insurance the Owner shall inform the Contractor in writing prior to commencement of the Work. Upon receipt of notice from the Owner, the Contractor may delay commencement of the Work and may obtain insurance that will protect the interests of the Contractor, Subcontractors, and Sub-Subcontractors in the Work. When the failure to provide coverage has been cured or resolved, the Contract Sum and Contract Time shall be equitably adjusted. In the event the Owner fails to procure coverage, the Owner waives all rights against the Contractor, Subcontractors, and Sub-subcontractors to the extent the loss to the Owner would have been covered by the insurance to have been procured by the Owner. The cost of the insurance shall be charged to the Owner by a Change Order.

§ 11.2.3 Notice of Cancellation or Expiration of Owner's Required Property Insurance. Within three (3) business days of the date the Owner becomes aware of an impending or actual cancellation or expiration of any property insurance required by the Contract Documents, the Owner shall provide notice to the Contractor of such impending or actual cancellation or expiration. Unless the lapse in coverage arises from an act or omission of the Contractor: (1) the Contractor, upon receipt of notice from the Owner, shall have the right to stop the Work until the lapse in coverage has been cured by the procurement of replacement coverage by either the Owner or the Contractor; (2) the Contract Time and Contract Sum shall be equitably adjusted; and (3) the Owner waives all rights against the Contractor, Subcontractors, and Sub-subcontractors to the extent any loss to the Owner would have been covered by the insurance had it not expired or been cancelled. If the Contractor purchases replacement coverage, the cost of the insurance shall be charged to the Owner by an appropriate Change Order..

§ 11.3 Waivers of Subrogation

§ 11.3.1 The Owner and Contractor waive all rights against (1) each other and any of their subcontractors, sub-subcontractors, agents, and employees, each of the other; (2) the Architect and Architect's consultants; and (3) Separate Contractors, if any, and any of their subcontractors, sub-subcontractors, agents, and employees, for damages caused by fire, or other causes of loss, to the extent those losses are covered by property insurance required by the Agreement or other property insurance applicable to the Project, except such rights as they have to proceeds of such insurance. The Owner or Contractor, as appropriate, shall require similar written waivers in favor of the individuals and entities identified above from the Architect, Architect's consultants, Separate Contractors, subcontractors, and sub-subcontractors. The policies of insurance purchased and maintained by each person or entity agreeing to waive claims pursuant to this section 11.3.1 shall not prohibit this waiver of subrogation. This waiver of subrogation shall be effective as to a person or entity (1) even though that person or entity would otherwise have a duty of indemnification, contractual or otherwise, (2) even though that person or entity did not pay the insurance premium directly or indirectly, or (3) whether or not the person or entity had an insurable interest in the damaged property.

(Paragraph deleted)

§ 11.4 Loss of Use, Business Interruption, and Delay in Completion Insurance

The Owner, at the Owner's option, may purchase and maintain insurance that will protect the Owner against loss of use of the Owner's property, or the inability to conduct normal operations, due to fire or other causes of loss. The Owner waives all rights of action against the Contractor and Architect for loss of use of the Owner's property, due to fire or other hazards however caused.

AIA Document A201® – 2017. Copyright © 1911, 1915, 1918, 1925, 1937, 1951, 1958, 1961, 1963, 1966, 1970, 1976, 1987, 1997, 2007 and 2017 by The American Institute of Architects. All rights reserved. The "American Institute of Architects," "AIA," the AIA Logo, "A201," and "AIA Contract Documents" are registered trademarks and may not be used without permission. This document was produced by AIA software at 11:08:54 ET on 03/18/2022 under Order No.2114262975 which expires on 12/03/2022, is not for resale, is licensed for one-time use only, and may only be used in accordance with the AIA Contract Documents® Terms of Service. To report copyright violations, e-mail copyright@aia.org.
User Notes: (944467505)

§11.5 Adjustment and Settlement of Insured Loss

§ 11.5.1 A loss insured under the property insurance required by the Agreement shall be adjusted by the Owner as fiduciary and made payable to the Owner as fiduciary for the insureds, as their interests may appear, subject to requirements of any applicable mortgagee clause and of Section 11.5.2. The Owner shall pay the Architect and Contractor their just shares of insurance proceeds received by the Owner, and by appropriate agreements the Architect and Contractor shall make payments to their consultants and Subcontractors in similar manner.

§ 11.5.2 Prior to settlement of an insured loss, the Owner shall notify the Contractor of the terms of the proposed settlement as well as the proposed allocation of the insurance proceeds. The Contractor shall have 14 days from receipt of notice to object to the proposed settlement or allocation of the proceeds. If the Contractor does not object, the Owner shall settle the loss and the Contractor shall be bound by the settlement and allocation. Upon receipt, the Owner shall deposit the insurance proceeds in a separate account and make the appropriate distributions. Thereafter, if no other agreement is made or the Owner does not terminate the Contract for convenience, the Owner and Contractor shall execute a Change Order for reconstruction of the damaged or destroyed Work in the amount allocated for that purpose. If the Contractor timely objects to either the terms of the proposed settlement or the allocation of the proceeds, the Owner may proceed to settle the insured loss, and any dispute between the Owner and Contractor arising out of the settlement or allocation of the proceeds shall be resolved pursuant to Article 15. Pending resolution of any dispute, the Owner may issue a Construction Change Directive for the reconstruction of the damaged or destroyed Work.

ARTICLE 12 UNCOVERING AND CORRECTION OF WORK

§ 12.1 Uncovering of Work

§ 12.1.1 If a portion of the Work is covered contrary to the Architect's request or to requirements specifically expressed in the Contract Documents, it must, if requested in writing by the Architect, be uncovered for the Architect's examination and be replaced at the Contractor's expense without change in the Contract Time.

§ 12.1.2 If a portion of the Work has been covered that the Architect has not specifically requested to examine prior to its being covered, the Architect may request to see such Work and it shall be uncovered by the Contractor. If such Work is in accordance with the Contract Documents, the Contractor shall be entitled to an equitable adjustment to the Contract Sum and Contract Time as may be appropriate. If such Work is not in accordance with the Contract Documents, the costs of uncovering the Work, and the cost of correction, shall be at the Contractor's expense.

§ 12.2 Correction of Work

§ 12.2.1 Before Substantial Completion

The Contractor shall promptly correct Work rejected by the Architect or failing to conform to the requirements of the Contract Documents, discovered before Substantial Completion and whether or not fabricated, installed or completed. Costs of correcting such rejected Work, including additional testing and inspections, the cost of uncovering and replacement, and compensation for the Architect's services and expenses made necessary thereby, shall be at the Contractor's expense.

§ 12.2.2 After Substantial Completion

§ 12.2.2.1 In addition to the Contractor's obligations under Section 3.5, if, within one year after the date of Substantial Completion of the Work or designated portion thereof or after the date for commencement of warranties established under Section 9.9.1, or by terms of any applicable special warranty required by the Contract Documents, any of the Work is found to be not in accordance with the requirements of the Contract Documents, the Contractor shall correct it promptly after receipt of notice from the Owner to do so, unless the Owner has previously given the Contractor a written acceptance of such condition. The Owner shall give such notice promptly after discovery of the condition. During the one-year period for correction of Work, if the Owner fails to notify the Contractor and give the Contractor an opportunity to make the correction, the Owner waives the rights to require correction by the Contractor and to make a claim for breach of warranty. If the Contractor fails to correct nonconforming Work within a reasonable time during that period after receipt of notice from the Owner or Architect, the Owner may correct it in accordance with Section 2.5.

§ 12.2.2.2 The one-year period for correction of Work shall be extended with respect to portions of Work first performed after Substantial Completion by the period of time between Substantial Completion and the actual completion of that portion of the Work.

AIA Document A201® – 2017. Copyright © 1911, 1915, 1918, 1925, 1937, 1951, 1958, 1961, 1963, 1966, 1970, 1976, 1987, 1997, 2007 and 2017 by The American Institute of Architects. All rights reserved. The "American Institute of Architects," "AIA," the AIA Logo, "A201," and "AIA Contract Documents" are registered trademarks and may not be used without permission. This document was produced by AIA software at 11:08:54 ET on 03/18/2022 under Order No.2114262975 which expires on 12/03/2022, is not for resale, is licensed for one-time use only, and may only be used in accordance with the AIA Contract Documents® Terms of Service. To report copyright violations, e-mail copyright@aia.org.
User Notes: (944467505)

§ 12.2.2.3 The one-year period for correction of Work shall not be extended by corrective Work performed by the Contractor pursuant to this Section 12.2.

§ 12.2.3 The Contractor shall remove from the site portions of the Work that are not in accordance with the requirements of the Contract Documents and are neither corrected by the Contractor nor accepted by the Owner.

§ 12.2.4 The Contractor shall bear the cost of correcting destroyed or damaged construction of the Owner or Separate Contractors, whether completed or partially completed, caused by the Contractor's correction or removal of Work that is not in accordance with the requirements of the Contract Documents.

§ 12.2.5 Nothing contained in this Section 12.2 shall be construed to establish a period of limitation with respect to other obligations the Contractor has under the Contract Documents. Establishment of the one-year period for correction of Work as described in Section 12.2.2 relates only to the specific obligation of the Contractor to correct the Work, and has no relationship to the time within which the obligation to comply with the Contract Documents may be sought to be enforced, nor to the time within which proceedings may be commenced to establish the Contractor's liability with respect to the Contractor's obligations other than specifically to correct the Work.

§ 12.3 Acceptance of Nonconforming Work

If the Owner prefers to accept Work that is not in accordance with the requirements of the Contract Documents, the Owner may do so instead of requiring its removal and correction, in which case the Contract Sum will be reduced as appropriate and equitable. Such adjustment shall be effected whether or not final payment has been made.

ARTICLE 13 MISCELLANEOUS PROVISIONS

§ 13.1 Governing Law

The Contract shall be governed by the law of the place where the Project is located, excluding that jurisdiction's choice of law rules.

§ 13.2 Successors and Assigns

§ 13.2.1 The Owner and Contractor respectively bind themselves, their partners, and representatives to covenants, agreements, and obligations contained in the Contract Documents.

(Paragraph deleted)

§ 13.3 Rights and Remedies

§ 13.3.1 Duties and obligations imposed by the Contract Documents and rights and remedies available thereunder shall be in addition to and not a limitation of duties, obligations, rights, and remedies otherwise imposed or available by law.

§ 13.3.2 No action or failure to act by the Owner, Architect, or Contractor shall constitute a waiver of a right or duty afforded them under the Contract, nor shall such action or failure to act constitute approval of or acquiescence in a breach thereunder, except as may be specifically agreed upon in writing.

§ 13.4 Tests and Inspections

§ 13.4.1 Tests, inspections, and approvals of portions of the Work shall be made as required by the Contract Documents and by applicable laws, statutes, ordinances, codes, rules, and regulations or lawful orders of public authorities. Unless otherwise provided, the Contractor shall make arrangements for such tests, inspections, and approvals with an independent testing laboratory or entity acceptable to the Owner, or with the appropriate public authority, and shall bear all related costs of tests, inspections, and approvals. The Contractor shall give the Architect timely notice of when and where tests and inspections are to be made so that the Architect may be present for such procedures. The Owner shall bear costs of tests, inspections, or approvals that do not become requirements until after bids are received or negotiations concluded. The Owner shall directly arrange and pay for tests, inspections, or approvals where building codes or applicable laws or regulations so require.

§ 13.4.2 If the Architect, Owner, or public authorities having jurisdiction determine that portions of the Work require additional testing, inspection, or approval not included under Section 13.4.1, the Architect will, upon written authorization from the Owner, instruct the Contractor to make arrangements for such additional testing, inspection, or approval, by an entity acceptable to the Owner, and the Contractor shall give timely notice to the Architect of when

AIA Document A201® – 2017. Copyright © 1911, 1915, 1918, 1925, 1937, 1951, 1958, 1961, 1963, 1966, 1970, 1976, 1987, 1997, 2007 and 2017 by The American Institute of Architects. All rights reserved. The "American Institute of Architects," "AIA," the AIA Logo, "A201," and "AIA Contract Documents" are registered trademarks and may not be used without permission. This document was produced by AIA software at 11:08:54 ET on 03/18/2022 under Order No.2114262975 which expires on 12/03/2022, is not for resale, is licensed for one-time use only, and may only be used in accordance with the AIA Contract Documents® Terms of Service. To report copyright violations, e-mail copyright@aia.org.
User Notes: (944467505)

and where tests and inspections are to be made so that the Architect may be present for such procedures. Such costs, except as provided in Section 13.4.3, shall be at the Owner's expense.

§ 13.4.3 If procedures for testing, inspection, or approval under Sections 13.4.1 and 13.4.2 reveal failure of the portions of the Work to comply with requirements established by the Contract Documents, all costs made necessary by such failure, including those of repeated procedures and compensation for the Architect's services and expenses, shall be at the Contractor's expense.

§ 13.4.4 Required certificates of testing, inspection, or approval shall, unless otherwise required by the Contract Documents, be secured by the Contractor and promptly delivered to the Architect.

§ 13.4.5 If the Architect is to observe tests, inspections, or approvals required by the Contract Documents, the Architect will do so promptly and, where practicable, at the normal place of testing.

§ 13.4.6 Tests or inspections conducted pursuant to the Contract Documents shall be made promptly to avoid unreasonable delay in the Work.

(Paragraphs deleted)

ARTICLE 14 TERMINATION OR SUSPENSION OF THE CONTRACT

§ 14.1 Termination by the Contractor

§ 14.1.1 The Contractor may terminate the Contract if the Work is stopped for a period of 30 consecutive days through no act or fault of the Contractor, a Subcontractor, a Sub-subcontractor, their agents or employees, or any other persons or entities performing portions of the Work, for any of the following reasons:

.1 Issuance of an order of a court or other public authority having jurisdiction that requires all Work to be stopped;

.2 An act of government, such as a declaration of national emergency, that requires all Work to be stopped;

.3 Because the Architect has not issued a Certificate for Payment and has not notified the Contractor of the reason for withholding certification as provided in Section 9.4.1, or because the Owner has not made payment on a Certificate for Payment within the time stated in the Contract Documents; or

.4 The Owner has failed to furnish to the Contractor reasonable evidence as required by Section 2.2.

§ 14.1.2 The Contractor may terminate the Contract if, through no act or fault of the Contractor, a Subcontractor, a Sub-subcontractor, their agents or employees, or any other persons or entities performing portions of the Work, repeated suspensions, delays, or interruptions of the entire Work by the Owner as described in Section 14.3, constitute in the aggregate more than 100 percent of the total number of days scheduled for completion, or 120 days in any 365-day period, whichever is less.

§ 14.1.3 If one of the reasons described in Section 14.1.1 or 14.1.2 exists, the Contractor may, upon seven days' notice to the Owner and Architect, terminate the Contract and recover from the Owner payment for Work executed, as well as reasonable overhead and profit on Work not executed, and costs incurred by reason of such termination.

§ 14.1.4 If the Work is stopped for a period of 60 consecutive days through no act or fault of the Contractor, a Subcontractor, a Sub-subcontractor, or their agents or employees or any other persons or entities performing portions of the Work because the Owner has repeatedly failed to fulfill the Owner's obligations under the Contract Documents with respect to matters important to the progress of the Work, the Contractor may, upon seven additional days' notice to the Owner and the Architect, terminate the Contract and recover from the Owner as provided in Section 14.1.3.

§ 14.2 Termination by the Owner for Cause

§ 14.2.1 The Owner may terminate the Contract if the Contractor

.1 repeatedly refuses or fails to supply enough properly skilled workers or proper materials;

.2 fails to make payment to Subcontractors or suppliers in accordance with the respective agreements between the Contractor and the Subcontractors or suppliers;

.3 repeatedly disregards applicable laws, statutes, ordinances, codes, rules and regulations, or lawful orders of a public authority; or

.4 otherwise is guilty of substantial breach of a provision of the Contract Documents.

AIA Document A201® – 2017. Copyright © 1911, 1915, 1918, 1925, 1937, 1951, 1958, 1961, 1963, 1966, 1970, 1976, 1987, 1997, 2007 and 2017 by The American Institute of Architects. All rights reserved. The "American Institute of Architects," "AIA," the AIA Logo, "A201," and "AIA Contract Documents" are registered trademarks and may not be used without permission. This document was produced by AIA software at 11:08:54 ET on 03/18/2022 under Order No.2114262975 which expires on 12/03/2022, is not for resale, is licensed for one-time use only, and may only be used in accordance with the AIA Contract Documents® Terms of Service. To report copyright violations, e-mail copyright@aia.org.
User Notes: (944467505)

§ 14.2.2 When any of the reasons described in Section 14.2.1 exist, and upon certification by the Architect that sufficient cause exists to justify such action, the Owner may, without prejudice to any other rights or remedies of the Owner and after giving the Contractor and the Contractor's surety, if any, seven days' notice, terminate employment of the Contractor and may, subject to any prior rights of the surety:

.1 Exclude the Contractor from the site and take possession of all materials, equipment, tools, and construction equipment and machinery thereon owned by the Contractor;

.2 Accept assignment of subcontracts pursuant to Section 5.4; and

.3 Finish the Work by whatever reasonable method the Owner may deem expedient. Upon written request of the Contractor, the Owner shall furnish to the Contractor a detailed accounting of the costs incurred by the Owner in finishing the Work.

§ 14.2.3 When the Owner terminates the Contract for one of the reasons stated in Section 14.2.1, the Contractor shall not be entitled to receive further payment until the Work is finished.

§ 14.2.4 If the unpaid balance of the Contract Sum exceeds costs of finishing the Work, including compensation for the Architect's services and expenses made necessary thereby, and other damages incurred by the Owner and not expressly waived, such excess shall be paid to the Contractor. If such costs and damages exceed the unpaid balance, the Contractor shall pay the difference to the Owner. The amount to be paid to the Contractor or Owner, as the case may be, shall be certified by the Initial Decision Maker, upon application, and this obligation for payment shall survive termination of the Contract.

§ 14.3 Suspension by the Owner for Convenience

§ 14.3.1 The Owner may, without cause, order the Contractor in writing to suspend, delay or interrupt the Work, in whole or in part for such period of time as the Owner may determine.

§ 14.3.2 The Contract Sum and Contract Time shall be adjusted for increases in the cost and time caused by suspension, delay, or interruption under Section 14.3.1. Adjustment of the Contract Sum shall include profit. No adjustment shall be made to the extent

.1 that performance is, was, or would have been, so suspended, delayed, or interrupted, by another cause for which the Contractor is responsible; or

.2 that an equitable adjustment is made or denied under another provision of the Contract.

§ 14.4 Termination by the Owner for Convenience

§ 14.4.1 The Owner may, at any time, terminate the Contract for the Owner's convenience and without cause.

§ 14.4.2 Upon receipt of notice from the Owner of such termination for the Owner's convenience, the Contractor shall

.1 cease operations as directed by the Owner in the notice;

.2 take actions necessary, or that the Owner may direct, for the protection and preservation of the Work; and

.3 except for Work directed to be performed prior to the effective date of termination stated in the notice, terminate all existing subcontracts and purchase orders and enter into no further subcontracts and purchase orders.

§ 14.4.3 In case of such termination for the Owner's convenience, the Owner shall pay the Contractor for Work properly executed; costs incurred by reason of the termination, including costs attributable to termination of Subcontracts; and the termination fee, if any, set forth in the Agreement.

ARTICLE 15 CLAIMS AND DISPUTES

§ 15.1 Claims This Article 15 shall survive the termination of the Agreement or the conclusion of the Agreement, as may be applicable.

§ 15.1.1 Definition

A Claim is a demand or assertion by one of the parties seeking, as a matter of right, payment of money, a change in the Contract Time, or other relief with respect to the terms of the Contract. The term "Claim" also includes other disputes and matters in question between the Owner and Contractor arising out of or relating to the Contract. The responsibility to substantiate Claims shall rest with the party making the Claim. This Section 15.1.1 does not require the Owner to file a Claim in order to impose liquidated damages in accordance with the Contract Documents.

AIA Document A201® – 2017. Copyright © 1911, 1915, 1918, 1925, 1937, 1951, 1958, 1961, 1963, 1966, 1970, 1976, 1987, 1997, 2007 and 2017 by The American Institute of Architects. All rights reserved. The "American Institute of Architects," "AIA," the AIA Logo, "A201," and "AIA Contract Documents" are registered trademarks and may not be used without permission. This document was produced by AIA software at 11:08:54 ET on 03/18/2022 under Order No.2114262975 which expires on 12/03/2022, is not for resale, is licensed for one-time use only, and may only be used in accordance with the AIA Contract Documents® Terms of Service. To report copyright violations, e-mail copyright@aia.org.
User Notes: (944467505)

§ 15.1.2 Time Limits on Claims
The Owner and Contractor shall commence all Claims and causes of action against the other and arising out of or related to the Contract, whether in contract, tort, breach of warranty or otherwise, in accordance with the requirements of the binding dispute resolution method selected in the Agreement and within the period specified by applicable law, but in any case not more than 10 years after the date of Substantial Completion of the Work. The Owner and Contractor waive all Claims and causes of action not commenced in accordance with this Section 15.1.2.

§ 15.1.3 Notice of Claims
§ 15.1.3.1 Claims by either the Owner or Contractor, where the condition giving rise to the Claim is first discovered prior to expiration of the period for correction of the Work set forth in Section 12.2.2, shall be initiated by notice to the other party and to the Initial Decision Maker with a copy sent to the Architect, if the Architect is not serving as the Initial Decision Maker. Claims by either party under this Section 15.1.3.1 shall be initiated within 21 days after occurrence of the event giving rise to such Claim or within 21 days after the claimant first recognizes the condition giving rise to the Claim, whichever is later.

§ 15.1.3.2 Claims by either the Owner or Contractor, where the condition giving rise to the Claim is first discovered after expiration of the period for correction of the Work set forth in Section 12.2.2, shall be initiated by notice to the other party. In such event, no decision by the Initial Decision Maker is required.

§ 15.1.4 Continuing Contract Performance
§ 15.1.4.1 Pending final resolution of a Claim, except as otherwise agreed in writing or as provided in Section 9.7 and Article 14, the Contractor shall proceed diligently with performance of the Contract and the Owner shall continue to make payments in accordance with the Contract Documents.

§ 15.1.4.2 The Contract Sum and Contract Time shall be adjusted in accordance with the Initial Decision Maker's decision, subject to the right of either party to proceed in accordance with this Article 15. The Architect will issue Certificates for Payment in accordance with the decision of the Initial Decision Maker.

§ 15.1.5 Claims for Additional Cost
If the Contractor wishes to make a Claim for an increase in the Contract Sum, notice as provided in Section 15.1.3 shall be given before proceeding to execute the portion of the Work that is the subject of the Claim. Prior notice is not required for Claims relating to an emergency endangering life or property arising under Section 10.4.

§ 15.1.6 Claims for Additional Time
§ 15.1.6.1 If the Contractor wishes to make a Claim for an increase in the Contract Time, notice as provided in Section 15.1.3 shall be given. In the case of a continuing delay, only one Claim is necessary.

§ 15.1.6.2 If adverse weather conditions are the basis for a Claim for additional time, such Claim shall be documented by data substantiating that weather conditions were abnormal for the period of time, could not have been reasonably anticipated, and had an adverse effect on the scheduled construction.

§ 15.1.7 Waiver of Claims for Consequential Damages
The Contractor and Owner waive Claims against each other for consequential damages arising out of or relating to this Contract. This mutual waiver includes

- **.1** damages incurred by the Owner for rental expenses, for losses of use, income, profit, financing, business and reputation, and for loss of management or employee productivity or of the services of such persons; and
- **.2** damages incurred by the Contractor for principal office expenses including the compensation of personnel stationed there, for losses of financing, business and reputation, and for loss of profit, except anticipated profit arising directly from the Work.

This mutual waiver is applicable, without limitation, to all consequential damages due to either party's termination in accordance with Article 14. Nothing contained in this Section 15.1.7 shall be deemed to preclude assessment of liquidated damages, when applicable, in accordance with the requirements of the Contract Documents.

AIA Document A201® – 2017. Copyright © 1911, 1915, 1918, 1925, 1937, 1951, 1958, 1961, 1963, 1966, 1970, 1976, 1987, 1997, 2007 and 2017 by The American Institute of Architects. All rights reserved. The "American Institute of Architects," "AIA," the AIA Logo, "A201," and "AIA Contract Documents" are registered trademarks and may not be used without permission. This document was produced by AIA software at 11:08:54 ET on 03/18/2022 under Order No.2114262975 which expires on 12/03/2022, is not for resale, is licensed for one-time use only, and may only be used in accordance with the AIA Contract Documents® Terms of Service. To report copyright violations, e-mail copyright@aia.org.
User Notes: (944467505)

§ 15.2 Initial Decision

§ 15.2.1 Claims, excluding those where the condition giving rise to the Claim is first discovered after expiration of the period for correction of the Work set forth in Section 12.2.2 or arising under Sections 10.3, 10.4, and 11.5, shall be referred to the Initial Decision Maker for initial decision. The Architect will serve as the Initial Decision Maker, unless otherwise indicated in the Agreement. Except for those Claims excluded by this Section 15.2.1, an initial decision shall be required as a condition precedent to mediation of any Claim. If an initial decision has not been rendered within 30 days after the Claim has been referred to the Initial Decision Maker, the party asserting the Claim may demand mediation and binding dispute resolution without a decision having been rendered. Unless the Initial Decision Maker and all affected parties agree, the Initial Decision Maker will not decide disputes between the Contractor and persons or entities other than the Owner.

§ 15.2.1.1 Claims by the Contractor shall be submitted to the initial Decision maker within 21 days after the notice of claims is initiated. Failure to submit claims within this period will be grounds for rejection of claims for additional Cost or Time.

§ 15.2.2 The Initial Decision Maker will review Claims and within ten days of the receipt of a Claim take one or more of the following actions: (1) request additional supporting data from the claimant or a response with supporting data from the other party, (2) reject the Claim in whole or in part, (3) approve the Claim, (4) suggest a compromise, or (5) advise the parties that the Initial Decision Maker is unable to resolve the Claim if the Initial Decision Maker lacks sufficient information to evaluate the merits of the Claim or if the Initial Decision Maker concludes that, in the Initial Decision Maker's sole discretion, it would be inappropriate for the Initial Decision Maker to resolve the Claim.

§ 15.2.3 In evaluating Claims, the Initial Decision Maker may, but shall not be obligated to, consult with or seek information from either party or from persons with special knowledge or expertise who may assist the Initial Decision Maker in rendering a decision. The Initial Decision Maker may request the Owner to authorize retention of such persons at the Owner's expense.

§ 15.2.4 If the Initial Decision Maker requests a party to provide a response to a Claim or to furnish additional supporting data, such party shall respond, within ten days after receipt of the request, and shall either (1) provide a response on the requested supporting data, (2) advise the Initial Decision Maker when the response or supporting data will be furnished, or (3) advise the Initial Decision Maker that no supporting data will be furnished. Upon receipt of the response or supporting data, if any, the Initial Decision Maker will either reject or approve the Claim in whole or in part.

§ 15.2.5 The Initial Decision Maker will render an initial decision approving or rejecting the Claim, or indicating that the Initial Decision Maker is unable to resolve the Claim. This initial decision shall (1) be in writing; (2) state the reasons therefor; and (3) notify the parties and the Architect, if the Architect is not serving as the Initial Decision Maker, of any change in the Contract Sum or Contract Time or both. The initial decision shall be final and binding on the parties but subject to mediation and, if the parties fail to resolve their dispute through mediation, to binding dispute resolution.

§ 15.2.6 Either party may file for mediation of an initial decision at any time, subject to the terms of Section 15.2.6.1.

§ 15.2.6.1 Either party may, within 30 days from the date of receipt of an initial decision, demand in writing that the other party file for mediation. If such a demand is made and the party receiving the demand fails to file for mediation within 30 days after receipt thereof, then both parties waive their rights to mediate or pursue binding dispute resolution proceedings with respect to the initial decision.

§ 15.2.7 In the event of a Claim against the Contractor, the Owner may, but is not obligated to, notify the surety, if any, of the nature and amount of the Claim. If the Claim relates to a possibility of a Contractor's default, the Owner may, but is not obligated to, notify the surety and request the surety's assistance in resolving the controversy.

§ 15.2.8 If a Claim relates to or is the subject of a mechanic's lien, the party asserting such Claim may proceed in accordance with applicable law to comply with the lien notice or filing deadlines.

AIA Document A201® – 2017. Copyright © 1911, 1915, 1918, 1925, 1937, 1951, 1958, 1961, 1963, 1966, 1970, 1976, 1987, 1997, 2007 and 2017 by The American Institute of Architects. All rights reserved. The "American Institute of Architects," "AIA," the AIA Logo, "A201," and "AIA Contract Documents" are registered trademarks and may not be used without permission. This document was produced by AIA software at 11:08:54 ET on 03/18/2022 under Order No.2114262975 which expires on 12/03/2022, is not for resale, is licensed for one-time use only, and may only be used in accordance with the AIA Contract Documents® Terms of Service. To report copyright violations, e-mail copyright@aia.org.
User Notes: (944467505)

§ 15.3 Mediation

§ 15.3.1 Claims, disputes, or other matters in controversy arising out of or related to the Contract, except those waived as provided for in Sections 9.10.4, 9.10.5, and 15.1.7, shall be subject to mediation as a condition precedent to binding dispute resolution.

§ 15.3.2 The parties shall endeavor to resolve their Claims by mediation which, unless the parties mutually agree otherwise, shall be administered by the American Arbitration Association in accordance with its Construction Industry Mediation Procedures in effect on the date of the Agreement. A request for mediation shall be made in writing, delivered to the other party to the Contract, and filed with the person or entity administering the mediation. The request shall be a condition precedent to the filing of litigation.

[END OF DOCUMENT – Revised December 1, 2021.]

(Paragraphs deleted)

AIA Document A201® – 2017. Copyright © 1911, 1915, 1918, 1925, 1937, 1951, 1958, 1961, 1963, 1966, 1970, 1976, 1987, 1997, 2007 and 2017 by The American Institute of Architects. All rights reserved. The "American Institute of Architects," "AIA," the AIA Logo, "A201," and "AIA Contract Documents" are registered trademarks and may not be used without permission. This document was produced by AIA software at 11:08:54 ET on 03/18/2022 under Order No.2114262975 which expires on 12/03/2022, is not for resale, is licensed for one-time use only, and may only be used in accordance with the AIA Contract Documents® Terms of Service. To report copyright violations, e-mail copyright@aia.org.
User Notes: (944467505)

SECTION 011000 – SUMMARY OF THE WORK

PART 1 - GENERAL

1.1 RELATED DOCUMENTS

A. Drawings and general provisions of the Contract, including General Conditions and other Division 01 Specification Sections, apply to this Section.

1.2 SUMMARY

A. This Section includes the following:

1. Work covered by the Contract Documents.
2. Type of the Contract.
3. Work phases.
4. Use of premises.
5. Owner's occupancy requirements.
6. Work restrictions.
7. Specification formats and conventions.

B. Related Sections include the following:

1. Division 01 Section "Temporary Facilities and Controls" for limitations and procedures governing temporary use of Owner's facilities.

1.3 WORK COVERED BY CONTRACT DOCUMENTS

A. Project Identification : Carteret Pier Pavilion

DMR Architects Project No. 5146

1. Project Location: Carteret Waterfront Park, 200 Middlesex Ave, Carteret, NJ 07008

B. Owner: Borough of Carteret
61 Cooke Ave
Carteret, NJ 07008

C. Architect: DMR Architects, 777 Terrace Avenue – 6th Floor, Hasbrouck Heights, NJ 07604

D. Contractor: (To be determined) has been engaged as Contractor for this Project.

E. The Work in general consists of but **is not limited to** the following:
a. Selective Demolition
b. Rough Carpentry
c. Structural steel
d. Finishes

e. Heating & Ventilation
f. Electrical
g. Information Technology

F. The project consists of a new 3,000 square foot covered aluminum structure is being proposed to provide indoor and outdoor seating, beverage serving area and a utility kitchen. The structure will be a 3 season, insulated building with enclosure walls composed of roll-up acrylic sides to keep out the elements. This structure will be located on the existing pier.

1.4 TYPE OF CONTRACT

A. Project will be constructed under a Single Prime Contract which includes the Work of all Divisions. The Contactor is responsible for the Work represented in the entire set of Contract Documents.

B. Before commencing Work, submit a schedule showing the sequence, commencement and completion dates, and move-out and -in dates of Owner's personnel for all phases of the Work

1.5 SCHEDULE / TIME OF COMPLETION

1. The Contract time and Work shall commence as of the date of a "Notice to Proceed" issued by the Owner upon award of the contract.

2. Contractor shall submit all required paperwork including but not limited to bond, insurance all submittals, schedule of values etc. within three weeks of Notice to Proceed.

1.6 MILESTONE SCHEDULE

<u>OUT TO BID:</u>
June 30, 2023

<u>BIDDING PERIOD:</u>
30 DAYS

<u>BID OPENING:</u>
August 11,2023

<u>NOTICE OF AWARD:</u>
On or about August 24,2023 Council Meeting

<u>SUBSTANTIAL COMPLETION:</u>
ON OR BEFORE June 1, 2024.

<u>FINAL COMPLETION / CLOSE OUT:</u>
NO LATER THAN September 1, 2024.

1.7 CONTRACTOR'S FINANCIAL RESPONSIBILITY

1. Failure to progress by the contractors in accordance with the schedule will be evidence of delay subjecting the contractors to liquidated damages and whatever additional actions and/or remedies the Owner may find necessary to take, in accordance with Owner-Contractor Agreement.

2. Liquidated damages will be assessed at the rate of **$500 per calendar day** after the date of Substantial Completion. See A201 General Conditions of the Contact for Construction, Section 8.4.1.

3. All dates set forth above are of the essence and must be met by the indicated contractor(s) or he/they may be subject to a claim by the Owner for an assessment of liquidated damages as indicated above.

4. The claim by the Owner for liquidated damages may be assessed against a single contractor, if he is the sole cause of the delay, or against one or all contractors, on a joint and several basis.

5. If the claim for delay is assessed against more than one Contractor, a determination by the Owner of the amount of the assessment to be borne by each delinquent Contractor shall take into account the extent of the delay attributable to each such Contractor.

6. The Contractor, understanding from the nature of the subject matter of this Contract, that the Owner will suffer loss and damages in the event of his failure to complete the work required under his contract within the time to which the completion date may be extended as hereinabove or hereinafter provided, and that the determination of the amount of such loss and damages of the Owner for such failure would be difficult by reference to any usual pecuniary standard, by reasons of, i.e. the uncertainty of the following:

   a. Loss of use of the Park

   b. Architects Expenses Incurred

   c. Additional Inspection Expenses Incurred

1.8 USE OF PREMISES

A. General: Contractor shall have limited use of premises for construction operations as indicated on Drawings by the Contract limits.

B. Use of Site: Limit use of premises to areas within the Contract limits indicated. Do not disturb portions of Project site beyond areas in which the Work is indicated.

   1. Limits: Confine construction operations to within Contract Limit Line and as follows:

2. Driveways and Entrances: Keep driveways and entrances serving premises clear and available to Owner, Owner's employees, and emergency vehicles at all times. Do not use these areas for parking or storage of materials.

    a. Schedule deliveries to minimize use of driveways and entrances.
    b. Schedule deliveries to minimize space and time requirements for storage of materials and equipment on-site.

1.9 OWNER'S OCCUPANCY REQUIREMENTS

A. Full Owner Occupancy: Owner will occupy the buildings & park during the entire construction period. Cooperate with Owner during construction operations to minimize conflicts and facilitate Owner usage. Perform the Work so as not to interfere with Owner's day-to-day operations. Maintain existing exits, unless otherwise indicated.

    1. Maintain access to existing walkways, corridors, and other adjacent occupied or used facilities. Do not close or obstruct walkways, corridors, or other occupied or used facilities without written permission from Owner and authorities having jurisdiction.
    2. Provide not less than 72 hours' notice to Owner of activities that will affect Owner's operations.

B. Owner Occupancy of Completed Areas of Construction: Owner reserves the right to occupy and to place and install equipment in completed areas of building, before Substantial Completion, provided such occupancy does not interfere with completion of the Work. Such placement of equipment and partial occupancy shall not constitute acceptance of the total Work.

    1 Architect will prepare a Certificate of Substantial Completion for each specific portion of the Work to be occupied before Owner occupancy.
    2. Obtain a Certificate of Occupancy from authorities having jurisdiction before Owner occupancy.
    3. Before partial Owner occupancy, mechanical and electrical systems shall be fully operational, and required tests and inspections shall be successfully completed. On occupancy, Owner will operate and maintain mechanical and electrical systems serving occupied portions of building.
    4. On occupancy, Owner will assume responsibility for maintenance and custodial service for occupied portions of building.

1.10 WORK RESTRICTIONS

A. On-Site Work Hours: Work shall be generally performed during the hours of 7:00 a.m. to 4:00 p.m., Monday through Friday, except otherwise indicated.

    1. Weekend Hours: 7:00 a.m. to 4:00 p.m.
    2. Second shift working hours of 3:00 p.m. to 11:00 p.m.
    3. Hours for Utility Shutdowns: Owner’s restriction – Contact Architect and Owner’s Representative prior to any and all utility shutdowns.

B. Existing Utility Interruptions: Do not interrupt utilities serving facilities occupied by Owner or others unless permitted under the following conditions and then only after arranging to provide temporary utility services according to requirements indicated:

1. Notify Architect not less than two days in advance of proposed utility interruptions.
2. Do not proceed with utility interruptions without Owner's written permission.

1.11 SPECIFICATION FORMATS AND CONVENTIONS

A. Specification Format: The Specifications are organized into Divisions and Sections using the 50-division format and CSI/CSC's "Master Format" numbering system.

1. Section Identification: The Specifications use Section numbers and titles to help cross-referencing in the Contract Documents. Sections in the Project Manual are in numeric sequence; however, the sequence is incomplete because all available Section numbers are not used. Consult the table of contents at the beginning of the Project Manual to determine numbers and names of Sections in the Contract Documents.
2. Division 01: Sections in Division 01 govern the execution of the Work of all Sections in the Specifications.

B. Specification Content: The Specifications use certain conventions for the style of language and the intended meaning of certain terms, words, and phrases when used in particular situations. These conventions are as follows:

1. Abbreviated Language: Language used in the Specifications and other Contract Documents is abbreviated. Words and meanings shall be interpreted as appropriate. Words implied, but not stated, shall be inferred as the sense requires. Singular words shall be interpreted as plural, and plural words shall be interpreted as singular where applicable as the context of the Contract Documents indicates.
2. Imperative mood and streamlined language are generally used in the Specifications. Requirements expressed in the imperative mood are to be performed by Contractor. Occasionally, the indicative or subjunctive mood may be used in the Section Text for clarity to describe responsibilities that must be fulfilled indirectly by Contractor or by others when so noted.

   a. The words "shall," "shall be," or "shall comply with," depending on the context, are implied where a colon (:) is used within a sentence or phrase.

END OF SECTION 011000

SECTION 012100 - ALLOWANCES

PART 1 - GENERAL

1.1 RELATED DOCUMENTS

A. Drawings and general provisions of the Contract, including General and Supplementary Conditions and other Division 01 Specification Sections, apply to this Section.

1.2 SUMMARY

A. This Section includes administrative and procedural requirements governing allowances.

1. Certain items are specified in the Contract Documents by allowances. Allowances have been established in lieu of additional requirements and to defer selection of actual materials and equipment to a later date when additional information is available for evaluation. If necessary, additional requirements will be issued by Change Order.

B. Types of allowances include the following:

1. Lump-sum allowances.

C. Related Sections include the following:

1. Division 01 Section "Contract Modification Procedures" for procedures for submitting and handling Change Orders for allowances.

1.3 SUBMITTALS

A. Submit proposals for purchase of products or systems included in allowances, in the form specified for Change Orders.

B. Submit invoices or delivery slips to show actual quantities of materials delivered to the site for use in fulfillment of each allowance.

C. Coordinate and process submittals for allowance items in same manner as for other portions of the Work.

1.4 COORDINATION

A. Coordinate allowance items with other portions of the Work. Furnish templates as required to coordinate installation.

1.5 LUMP-SUM QUANTITY ALLOWANCES

A. Allowance shall include cost to Contractor of specific products and materials under allowance and shall include labor, taxes, freight, and delivery to Project site.

1.6 ALLOWANCES

A. At Project closeout, credit unused amounts remaining in the allowance to Owner by Change Order.

B. Lump-Sum Allowances: The amount herein specified are the net amounts available, and each change order amount shall be based thereon. All other cost associated with the performance of the work under the allowance, including but not limited to, general conditions, insurance, bond, overhead, profit, etc., are not a part of the allowance, and shall be included in the Base Bid Contract amount.

PART 2 - PRODUCTS (Not Used)

PART 3 - EXECUTION

3.1 EXAMINATION

A. Examine products covered by an allowance promptly on delivery for damage or defects. Return damaged or defective products to manufacturer for replacement.

3.2 PREPARATION

A. Coordinate materials and their installation for each allowance with related materials and installations to ensure that each allowance item is completely integrated and interfaced with related work.

3.3 SCHEDULE OF ALLOWANCES

A. **Allowance No. 1**

Include the amount of One Hundred Thousand Dollars ($100,000.00) in the Base Bid to be used as directed by the Owner.

B. **Allowance No. 2**

Include the amount of Ten Thousand Dollars ($10,000.00) in the Base Bid for third party testing and inspections.

END OF SECTION 012100

SECTION 012300 - ALTERNATES

PART 1 - GENERAL

1.1 RELATED DOCUMENTS

A. Drawings and general provisions of the Contract, including General and Supplementary Conditions and other Division 01 Specification Sections, apply to this Section.

1.2 SUMMARY

A. This Section includes administrative and procedural requirements for alternates.

1.3 DEFINITIONS

A. Alternate: An amount proposed by bidders and stated on the Bid Form for certain work defined in the Bidding Requirements that may be added to or deducted from the Base Bid amount if Owner decides to accept a corresponding change either in the amount of construction to be completed or in the products, materials, equipment, systems, or installation methods described in the Contract Documents.

1. The cost or credit for each alternate is the net addition to or deduction from the Contract Sum to incorporate alternate into the Work. No other adjustments are made to the Contract Sum.

1.4 PROCEDURES

A. Coordination: Modify or adjust affected adjacent work as necessary to completely integrate work of the alternate into Project.

1. Include as part of each alternate, miscellaneous devices, accessory objects, and similar items incidental to or required for a complete installation whether or not indicated as part of alternate.

B. Notification: Immediately following award of the Contract, notify each party involved, in writing, of the status of each alternate. Indicate if alternates have been accepted, rejected, or deferred for later consideration. Include a complete description of negotiated modifications to alternates.

C. Execute accepted alternates under the same conditions as other work of the Contract.

D. Schedule: A Schedule of Alternates is included at the end of this Section. Specification Sections referenced in schedule contain requirements for materials necessary to achieve the work described under each alternate.

PART 2 - PRODUCTS (Not Used)

PART 3 - EXECUTION

3.1 SCHEDULE OF ALTERNATES

Add Alternate No. 1: State the cost difference to the Base Bid to provide & install the food service equipment specified on sheet FS1.0 (excluding items 5, 6 & 7) including the associated electrical work and plumbing as specified and shown in the drawings.

Add Alternate No. 2: State the cost difference to the Base Bid to provide & install the bromic infrared heaters including the associated electrical work and controls as specified and shown in the drawings.

Add Alternate No. 3: State the cost difference to the Base Bid to provide & install the bar millwork & countertops including the associated electrical work and plumbing as specified and shown in the drawings.

END OF SECTION 012300

SECTION 012600 - CONTRACT MODIFICATION PROCEDURES

PART 1 - GENERAL

1.1 RELATED DOCUMENTS

A. Drawings and general provisions of the Contract, including General and Supplementary Conditions and other Division 01 Specification Sections, apply to this Section.

1.2 SUMMARY

A. This Section specifies administrative and procedural requirements for handling and processing Contract modifications.

B. Related Sections include the following:

1. Division 01 Section "Allowances" for procedural requirements for handling and processing allowances.
2. Division 01 Section "Unit Prices" for administrative requirements for using unit prices.
3. Division 01 Section "Product Requirements" for administrative procedures for handling requests for substitutions made after Contract award.

1.3 MINOR CHANGES IN THE WORK

A. Architect will issue supplemental instructions authorizing Minor Changes in the Work, not involving adjustment to the Contract Sum or the Contract Time on AIA Document G710, "Architect's Supplemental Instructions."

1.4 PROPOSAL REQUESTS

A. Owner-Initiated Proposal Requests: Architect will issue a detailed description of proposed changes in the Work that may require adjustment to the Contract Sum or the Contract Time. If necessary, the description will include supplemental or revised Drawings and Specifications.

1. Proposal Requests issued by Architect are for information only. Do not consider them instructions either to stop work in progress or to execute the proposed change.
2. Within 20 days after receipt of Proposal Request, submit a quotation estimating cost adjustments to the Contract Sum and the Contract Time necessary to execute the change.

a. Include a list of quantities of products required or eliminated and unit costs, with total amount of purchases and credits to be made. If requested, furnish survey data to substantiate quantities.

b. Indicate applicable taxes, delivery charges, equipment rental, and amounts of trade discounts.
c. Include costs of labor and supervision directly attributable to the change.
d. Include an updated Contractor's Construction Schedule that indicates the effect of the change, including, but not limited to, changes in activity duration, start and finish times, and activity relationship. Use available total float before requesting an extension of the Contract Time.

B. Contractor-Initiated Proposals: If latent or unforeseen conditions require modifications to the Contract, Contractor may propose changes by submitting a request for a change to Architect.

1. Include a statement outlining reasons for the change and the effect of the change on the Work. Provide a complete description of the proposed change. Indicate the effect of the proposed change on the Contract Sum and the Contract Time.
2. Include a list of quantities of products required or eliminated and unit costs, with total amount of purchases and credits to be made. If requested, furnish survey data to substantiate quantities.
3. Indicate applicable taxes, delivery charges, equipment rental, and amounts of trade discounts.
4. Include costs of labor and supervision directly attributable to the change.
5. Include an updated Contractor's Construction Schedule that indicates the effect of the change, including, but not limited to, changes in activity duration, start and finish times, and activity relationship. Use available total float before requesting an extension of the Contract Time.
6. Comply with requirements in Division 01 Section "Product Requirements" if the proposed change requires substitution of one product or system for product or system specified.

1.5 ALLOWANCES

A. Allowance Adjustment: To adjust allowance amounts, base each Change Order proposal on the difference between purchase amount and the allowance, multiplied by final measurement of work-in-place. If applicable, include reasonable allowances for cutting losses, tolerances, mixing wastes, normal product imperfections, and similar margins.

1. Include installation costs in purchase amount only where indicated as part of the allowance.
2. If requested, prepare explanation and documentation to substantiate distribution of overhead costs and other margins claimed.
3. Submit substantiation of a change in scope of work, if any, claimed in Change Orders related to unit-cost allowances.
4. Owner reserves the right to establish the quantity of work-in-place by independent quantity survey, measure, or count.

B. Submit claims for increased costs because of a change in scope or nature of the allowance described in the Contract Documents, whether for the Purchase Order amount or Contractor's handling, labor, installation, overhead, and profit. Submit claims within 21days of receipt of the Change Order or Construction Change Directive

authorizing work to proceed. Owner will reject claims submitted later than 21 days after such authorization.

1. Do not include Contractor's or subcontractor's indirect expense in the Change Order cost amount unless it is clearly shown that the nature or extent of work has changed from what could have been foreseen from information in the Contract Documents.
2. No change to Contractor's indirect expense is permitted for selection of higher- or lower-priced materials or systems of the same scope and nature as originally indicated.

1.6 CHANGE ORDER PROCEDURES

A. On Owner's approval of a Proposal Request, Architect will issue a Change Order for signatures of Owner and Contractor on AIA Document G701.

1.7 CONSTRUCTION CHANGE DIRECTIVE

A. Construction Change Directive: Architect may issue a Construction Change Directive on AIA Document G714. Construction Change Directive instructs Contractor to proceed with a change in the Work, for subsequent inclusion in a Change Order.

1. Construction Change Directive contains a complete description of change in the Work. It also designates method to be followed to determine change in the Contract Sum or the Contract Time.

B. Documentation: Maintain detailed records on a time and material basis of work required by the Construction Change Directive.

1. After completion of change, submit an itemized account and supporting data necessary to substantiate cost and time adjustments to the Contract.

PART 2 - PRODUCTS (Not Used)

PART 3 - EXECUTION (Not Used)

END OF SECTION 012600

SECTION 012900 - PAYMENT PROCEDURES

PART 1 - GENERAL

1.1 RELATED DOCUMENTS

A. Drawings and general provisions of the Contract, including General and Supplementary Conditions and other Division 01 Specification Sections, apply to this Section.

1.2 SUMMARY

A. This Section specifies administrative and procedural requirements necessary to prepare and process Applications for Payment.

B. Related Sections include the following:

1. Division 01 Section "Allowances" for procedural requirements governing handling and processing of allowances.
2. Division 01 Section "Contract Modification Procedures" for administrative procedures for handling changes to the Contract.
3. Division 01 Section "Unit Prices" for administrative requirements governing use of unit prices.
4. Division 01 Section "Construction Progress Documentation" for administrative requirements governing preparation and submittal of Contractor's Construction Schedule and Submittals Schedule.

1.3 DEFINITIONS

A. Schedule of Values: A statement furnished by Contractor allocating portions of the Contract Sum to various portions of the Work and used as the basis for reviewing Contractor's Applications for Payment.

1.4 SCHEDULE OF VALUES

A. Coordination: Coordinate preparation of the Schedule of Values with preparation of Contractor's Construction Schedule.

1. Correlate line items in the Schedule of Values with other required administrative forms and schedules, including the following:

a. Application for Payment forms with Continuation Sheets.
b. Submittals Schedule.
c. Contractor's Construction Schedule.

2. Submit the Schedule of Values to Architect at earliest possible date but no later than seven days before the date scheduled for submittal of initial Applications for Payment.
3. Sub schedules: Where the Work is separated into phases requiring separately phased payments, provide sub schedules showing values correlated with each phase of payment.

B. Format and Content: Use the Project Manual table of contents as a guide to establish line items for the Schedule of Values. Provide at least one line item for each Specification Section.

1. Identification: Include the following Project identification on the Schedule of Values:

   a. Project name and location.
   b. Name of Architect.
   c. Architect's project number.
   d. Contractor's name and address.
   e. Date of submittal.

2. Submit draft of AIA Document G703 Continuation Sheets. Retain subparagraph above or first subparagraph and associated subparagraphs below.
3. Arrange the Schedule of Values in tabular form with separate columns to indicate the following for each item listed:

   a. Related Specification Section or Division.
   b. Description of the Work.
   c. Name of subcontractor.
   d. Name of manufacturer or fabricator.
   e. Name of supplier.
   f. Change Orders (numbers) that affect value.
   g. Dollar value.

      1) Percentage of the Contract Sum to nearest one-hundredth percent, adjusted to total 100 percent.

4. Provide a breakdown of the Contract Sum in enough detail to facilitate continued evaluation of Applications for Payment and progress reports. Coordinate with the Project Manual table of contents. Provide several line items for principal subcontract amounts, where appropriate.
5. Round amounts to nearest whole dollar; total shall equal the Contract Sum.
6. Provide a separate line item in the Schedule of Values for each part of the Work where Applications for Payment may include materials or equipment purchased or fabricated and stored, but not yet installed.

   a. Differentiate between items stored on-site and items stored off-site. If specified, include evidence of insurance or bonded warehousing.

7. Provide separate line items in the Schedule of Values for initial cost of materials, for each subsequent stage of completion, and for total installed value of that part of the Work.
8. Allowances: Provide a separate line item in the Schedule of Values for each allowance. Show line-item value of unit-cost allowances, as a product of the unit

cost, multiplied by measured quantity. Use information indicated in the Contract Documents to determine quantities.

9. Each item in the Schedule of Values and Applications for Payment shall be complete. Include total cost and proportionate share of general overhead and profit for each item.

    a. Temporary facilities and other major cost items that are not direct cost of actual work-in-place may be shown either as separate line items in the Schedule of Values or distributed as general overhead expense, at Contractor's option.

10. Schedule Updating: Update and resubmit the Schedule of Values before the next Applications for Payment when Change Orders or Construction Change Directives result in a change in the Contract Sum.

1.5 APPLICATIONS FOR PAYMENT

A. Each Application for Payment shall be consistent with previous applications and payments as certified by Architect and paid for by Owner.

    1. Initial Application for Payment, Application for Payment at time of Substantial Completion, and final Application for Payment involve additional requirements.

B. Payment Application Times: The date for each progress payment is indicated in the Agreement between Owner and Contractor. The period of construction Work covered by each Application for Payment is the period indicated in the Agreement.

C. Payment Application Forms: Use AIA Document G702 and AIA Document G703 Continuation Sheets as form for Applications for Payment.

D. Payment Application Forms: Use forms provided by Owner for Applications for Payment. Sample copies are included at end of this Section.

E. Application Preparation: Provide "Pencil Copy" to Architect for approval prior to final hardcopy. Complete every entry on form. Notarize and execute by a person authorized to sign legal documents on behalf of Contractor. Architect will return incomplete applications without action.

    1. Entries shall match data on the Schedule of Values and Contractor's Construction Schedule. Use updated schedules if revisions were made.
    2. Include amounts of executed Change Orders and Construction Change Directives issued before last day of construction period covered by application.

F. Transmittal: Submit 3 signed and notarized original copies of each Application for Payment to Architect by a method ensuring receipt within 24 hours. One copy shall include waivers of lien and similar attachments if required.

    1. Transmit each copy with a transmittal form listing attachments and recording appropriate information about application.

G. Waivers of Mechanic's Lien: With each Application for Payment, submit waivers of mechanic's liens from subcontractors, sub-subcontractors, and suppliers for construction period covered by the previous application.

1. Submit partial waivers on each item for amount requested in previous application, after deduction for retainage, on each item.
2. When an application shows completion of an item, submit final or full waivers.
3. Owner reserves the right to designate which entities involved in the Work must submit waivers.
4. Submit final Application for Payment with or preceded by final waivers from every entity involved with performance of the Work covered by the application who is lawfully entitled to a lien.
5. Waiver Forms: Submit waivers of lien on forms, executed in a manner acceptable to Owner.

H. Initial Application for Payment: Administrative actions and submittals that must precede or coincide with submittal of first Application for Payment include the following:

1. List of subcontractors.
2. Schedule of Values.
3. Contractor's Construction Schedule (preliminary if not final).
4. Products list.
5. Schedule of unit prices.
6. Submittals Schedule (preliminary if not final).
7. List of Contractor's staff assignments.
8. List of Contractor's principal consultants.
9. Copies of building permits.
10. Copies of authorizations and licenses from authorities having jurisdiction for performance of the Work.
11. Initial progress report.
12. Report of preconstruction conference.
13. Certificates of insurance and insurance policies.
14. Performance and payment bonds.
15. Data needed to acquire Owner's insurance.
16. Initial settlement survey and damage report if required.

I. Application for Payment at Substantial Completion: After issuing the Certificate of Substantial Completion, submit an Application for Payment showing 100 percent completion for portion of the Work claimed as substantially complete.

1. Include documentation supporting claim that the Work is substantially complete and a statement showing an accounting of changes to the Contract Sum.
2. This application shall reflect Certificates of Partial Substantial Completion issued previously for Owner occupancy of designated portions of the Work.

J. Final Payment Application: Submit final Application for Payment with releases and supporting documentation not previously submitted and accepted, including, but not limited, to the following:

1. Evidence of completion of Project closeout requirements.
2. Insurance certificates for products and completed operations where required and proof that taxes, fees, and similar obligations were paid.

3. Updated final statement, accounting for final changes to the Contract Sum.
4. AIA Document G706, "Contractor's Affidavit of Payment of Debts and Claims."
5. AIA Document G706A, "Contractor's Affidavit of Release of Liens."
6. AIA Document G707, "Consent of Surety to Final Payment."
7. Evidence that claims have been settled.
8. Final meter readings for utilities, a measured record of stored fuel, and similar data as of date of Substantial Completion or when Owner took possession of and assumed responsibility for corresponding elements of the Work.
9. Final, liquidated damages settlement statement.

1.6 WAIVER OF LIENS

A. The Contractor, for himself, and for all subcontractors and material men, agrees that no mechanic's lien or other claim shall be filed or maintained by the Contractor or by any Subcontractor, material men, laborer or any other person whatsoever for, or on account of any work performed or, materials furnished under this contract. This agreement shall execute and deliver a separate waiver of Liens in form and substance satisfactory the Owner contemporaneously with the execution of the Owner-Contractor Agreement and before any work is begun at the site.

B. In every subcontract entered into by the Contractor after execution of this Contract or connection herewith, the Contractor shall incorporate a provision, similar to the foregoing paragraph, to the effect that neither the subcontractor nor any party acting through or under him shall file or maintain any mechanic's lien or other claim against the Owner in connection with the work.

1.7 TAXES

A. Ocean County College is established under the authority of the State of New Jersey and is entitled to exemption from Federal, State and local taxes, including the New Jersey Sales Tax. No amount attributable to taxes shall be included in the bid prices. Sample form is available from the Owner.

PART 2 - PRODUCTS (Not Used)

PART 3 - EXECUTION (Not Used)

END OF SECTION 012900

SECTION 013100 - PROJECT MANAGEMENT AND COORDINATION

PART 1 - GENERAL

1.1 RELATED DOCUMENTS

A. Drawings and general provisions of the Contract, including General and Supplementary Conditions and other Division 01 Specification Sections, apply to this Section.

1.2 SUMMARY

A. This Section includes administrative provisions for coordinating construction operations on Project including, but not limited to, the following:

1. Coordination Drawings.
2. Administrative and supervisory personnel.
3. Project meetings.
4. Requests for Information (RFIs).

B. Each contractor shall participate in coordination requirements. Certain areas of responsibility will be assigned to a specific contractor.

C. Related Sections include the following:

1. Division 01 Section "Multiple Contract Summary" for a description of the division of Work among separate contracts and responsibility for coordination activities not in this Section.
2. Division 01 Section "Construction Progress Documentation" for preparing and submitting Contractor's Construction Schedule.
3. Division 01 Section "Execution" for procedures for coordinating general installation and field-engineering services, including establishment of benchmarks and control points.
4. Division 01 Section "Closeout Procedures" for coordinating closeout of the Contract.

1.3 DEFINITIONS

A. RFI: Request from Contractor seeking interpretation or clarification of the Contract Documents.

1.4 COORDINATION

A. Coordination: Coordinate construction operations included in different Sections of the Specifications to ensure efficient and orderly installation of each part of the Work. Coordinate construction operations, included in different Sections, that depend on each other for proper installation, connection, and operation.

B. Coordination: Each contractor shall coordinate its construction operations with those of other contractors and entities to ensure efficient and orderly installation of each part of the Work. Each contractor shall coordinate its operations with operations, included in different Sections, that depend on each other for proper installation, connection, and operation.

1. Schedule construction operations in sequence required to obtain the best results where installation of one part of the Work depends on installation of other components, before or after its own installation.
2. Coordinate installation of different components with other contractors to ensure maximum accessibility for required maintenance, service, and repair.
3. Make adequate provisions to accommodate items scheduled for later installation.
4. Where availability of space is limited, coordinate installation of different components to ensure maximum performance and accessibility for required maintenance, service, and repair of all components, including mechanical and electrical.

C. Prepare memoranda for distribution to each party involved, outlining special procedures required for coordination. Include such items as required notices, reports, and list of attendees at meetings.

1. Prepare similar memoranda for Owner and separate contractors if coordination of their Work is required.

D. Administrative Procedures: Coordinate scheduling and timing of required administrative procedures with other construction activities and activities of other contractors to avoid conflicts and to ensure orderly progress of the Work. Such administrative activities include, but are not limited to, the following:

1. Preparation of Contractor's Construction Schedule.
2. Preparation of the Schedule of Values.
3. Installation and removal of temporary facilities and controls.
4. Delivery and processing of submittals.
5. Progress meetings.
6. Preinstallation conferences.
7. Project closeout activities.
8. Startup and adjustment of systems.
9. Project closeout activities.

E. Conservation: Coordinate construction activities to ensure that operations are carried out with consideration given to conservation of energy, water, and materials.

1. Salvage materials and equipment involved in performance of, but not actually incorporated into, the Work. Refer to other Sections for disposition of salvaged materials that are designated as Owner's property.

1.5 SUBMITTALS

A. Coordination Drawings: Prepare Coordination Drawings if limited space availability necessitates maximum utilization of space for efficient installation of different

components or if coordination is required for installation of products and materials fabricated by separate entities.

1. Content: Project-specific information, drawn accurately to scale. Do not base Coordination Drawings on reproductions of the Contract Documents or standard printed data. Include the following information, as applicable:

    a. Indicate functional and spatial relationships of components of architectural, structural, civil, mechanical, and electrical systems.
    b. Indicate required installation sequences.
    c. Indicate dimensions shown on the Contract Drawings and make specific note of dimensions that appear to be in conflict with submitted equipment and minimum clearance requirements. Provide alternate sketches to Architect for resolution of such conflicts. Minor dimension changes and difficult installations will not be considered changes to the Contract.

2. Sheet Size: At least 8-1/2 by 11 inches but no larger than 30 by 40 inches.
3. Number of Copies: Submit 6 opaque copies of each submittal. Architect will return 4 copies.

    a. Submit 6 copies where Coordination Drawings are required for operation and maintenance manuals. Architect and Construction Manager will retain two copies; remainder will be returned. Mark up and retain one returned copy as a Project Record Drawing.

4. Refer to individual Sections for Coordination Drawing requirements for Work in those Sections.

B. Key Personnel Names: Within 7 days of starting construction operations, submit a list of key personnel assignments, including superintendent and other personnel in attendance at Project site. Identify individuals and their duties and responsibilities; list addresses and telephone numbers, including home and office telephone numbers. Provide names, addresses, and telephone numbers of individuals assigned as standbys in the absence of individuals assigned to Project.

    1. Post copies of list in Project meeting room, in temporary field office, and by each temporary telephone. Keep list current at all times.

1.6 ADMINISTRATIVE AND SUPERVISORY PERSONNEL

A. General: In addition to Project superintendent, provide other administrative and supervisory personnel as required for proper performance of the Work.

    1. Include special personnel required for coordination of operations with other contractors.

1.7 PROJECT MEETINGS

A. General: Schedule and conduct meetings and conferences at Project site, unless otherwise indicated.

1. Attendees: Inform participants and others involved, and individuals whose presence is required, of date and time of each meeting. Notify Owner and Architect of scheduled meeting dates and times.
2. Agenda: Prepare the meeting agenda. Distribute the agenda to all invited attendees.
3. Minutes: Record significant discussions and agreements achieved. Distribute the meeting minutes to everyone concerned, including Owner and Architect, within three days of the meeting.

B. Preconstruction Conference: Schedule a preconstruction conference before starting construction, at a time convenient to Owner and Architect, but no later than 10 days after execution of the Agreement. Hold the conference at Project site or another convenient location. Conduct the meeting to review responsibilities and personnel assignments.

1. Attendees: Authorized representatives of Owner, Architect, and their consultants; Contractor and its superintendent; major subcontractors; suppliers; and other concerned parties shall attend the conference. All participants at the conference shall be familiar with Project and authorized to conclude matters relating to the Work.
2. Agenda: Discuss items of significance that could affect progress, including the following:

    a. Tentative construction schedule.
    b. Phasing.
    c. Critical work sequencing and long-lead items.
    d. Designation of key personnel and their duties.
    e. Procedures for processing field decisions and Change Orders.
    f. Procedures for RFIs.
    g. Procedures for testing and inspecting.
    h. Procedures for processing Applications for Payment.
    i. Distribution of the Contract Documents.
    j. Submittal procedures.
    k. LEED requirements.
    l. Preparation of Record Documents.
    m. Use of the premises.
    n. Work restrictions.
    o. Owner's occupancy requirements.
    p. Responsibility for temporary facilities and controls.
    q. Construction waste management and recycling.
    r. Parking availability.
    s. Office, work, and storage areas.
    t. Equipment deliveries and priorities.
    u. First aid.
    v. Security.
    w. Progress cleaning.
    x. Working hours.

C. Preinstallation Conferences: Conduct a preinstallation conference at Project site before each construction activity that requires coordination with other construction.

1. Attendees: Installer and representatives of manufacturers and fabricators involved in or affected by the installation and its coordination or integration with other materials and installations that have preceded or will follow, shall attend the meeting. Advise Architect and Owner of scheduled meeting dates.
2. Agenda: Review progress of other construction activities and preparations for the particular activity under consideration, including requirements for the following:

    a. The Contract Documents.
    b. Options.
    c. Related RFIs.
    d. Related Change Orders.
    e. Purchases.
    f. Deliveries.
    g. Submittals.
    h. Review of mockups.
    i. Possible conflicts.
    j. Compatibility problems.
    k. Time schedules.
    l. Weather limitations.
    m. Manufacturer's written recommendations.
    n. Warranty requirements.
    o. Compatibility of materials.
    p. Acceptability of substrates.
    q. Temporary facilities and controls.
    r. Space and access limitations.
    s. Regulations of authorities having jurisdiction.
    t. Testing and inspecting requirements.
    u. Installation procedures.
    v. Coordination with other work.
    w. Required performance results.
    x. Protection of adjacent work.
    y. Protection of construction and personnel.

3. Record significant conference discussions, agreements, and disagreements, including required corrective measures and actions.
4. Reporting: Distribute minutes of the meeting to each party present and to parties who should have been present.
5. Do not proceed with installation if the conference cannot be successfully concluded. Initiate whatever actions are necessary to resolve impediments to performance of the Work and reconvene the conference at earliest feasible date.

D. Progress Meetings: Conduct progress meetings at biweekly intervals. Coordinate dates of meetings with preparation of payment requests.

1. Attendees: In addition to representatives of Owner and Architect, each contractor, subcontractor, supplier, and other entity concerned with current progress or involved in planning, coordination, or performance of future activities shall be represented at these meetings. All participants at the conference shall be familiar with Project and authorized to conclude matters relating to the Work.

2. Agenda: Review and correct or approve minutes of previous progress meeting. Review other items of significance that could affect progress. Include topics for discussion as appropriate to status of Project.

   a. Contractor's Construction Schedule: Review progress since the last meeting. Determine whether each activity is on time, ahead of schedule, or behind schedule, in relation to Contractor's Construction Schedule. Determine how construction behind schedule will be expedited; secure commitments from parties involved to do so. Discuss whether schedule revisions are required to ensure that current and subsequent activities will be completed within the Contract Time.

      1) Review schedule for next period.

   b. Review present and future needs of each entity present, including the following:

      1) Interface requirements.
      2) Sequence of operations.
      3) Status of submittals.
      4) Deliveries.
      5) Off-site fabrication.
      6) Access.
      7) Site utilization.
      8) Temporary facilities and controls.
      9) Work hours.
      10) Hazards and risks.
      11) Progress cleaning.
      12) Quality and work standards.
      13) Status of correction of deficient items.
      14) Field observations.
      15) RFIs.
      16) Status of proposal requests.
      17) Pending changes.
      18) Status of Change Orders.
      19) Pending claims and disputes.
      20) Documentation of information for payment requests.

3. Reporting: Distribute minutes of the meeting to each party present and to parties who should have been present.

   a. Schedule Updating: Revise Contractor's Construction Schedule after each progress meeting where revisions to the schedule have been made or recognized. Issue revised schedule concurrently with the report of each meeting.

E. Coordination Meetings: Conduct Project coordination meetings at weekly intervals. Project coordination meetings are in addition to specific meetings held for other purposes, such as progress meetings and preinstallation conferences.

   1. Attendees: In addition to representatives of Owner and Architect, each contractor, subcontractor, supplier, and other entity concerned with current progress or involved in planning, coordination, or performance of future activities

shall be represented at these meetings. All participants at the conference shall be familiar with Project and authorized to conclude matters relating to the Work.

2. Agenda: Review and correct or approve minutes of the previous coordination meeting. Review other items of significance that could affect progress. Include topics for discussion as appropriate to status of Project.

   a. Combined Contractor's Construction Schedule: Review progress since the last coordination meeting. Determine whether each contract is on time, ahead of schedule, or behind schedule, in relation to Combined Contractor's Construction Schedule. Determine how construction behind schedule will be expedited; secure commitments from parties involved to do so. Discuss whether schedule revisions are required to ensure that current and subsequent activities will be completed within the Contract Time.
   b. Schedule Updating: Revise Combined Contractor's Construction Schedule after each coordination meeting where revisions to the schedule have been made or recognized. Issue revised schedule concurrently with report of each meeting.
   c. Review present and future needs of each contractor present, including the following:

      1) Interface requirements.
      2) Sequence of operations.
      3) Status of submittals.
      4) Deliveries.
      5) Off-site fabrication.
      6) Access.
      7) Site utilization.
      8) Temporary facilities and controls.
      9) Work hours.
      10) Hazards and risks.
      11) Progress cleaning.
      12) Quality and work standards.
      13) Change Orders.

3. Reporting: No later than 3 days after each coordination meeting date, distribute copies of minutes of the meeting to each party present and to other parties who should have been present. Include a brief summary, in narrative form, of progress since the previous meeting and report.
   a. Schedule Updating: Revise the construction schedule after each progress meeting where revisions to the schedule have been made or recognized. Issue the revised schedule concurrently with the reporting of each meeting.

1.8 REQUESTS FOR INFORMATION (RFIs)

A. Procedure: Immediately on discovery of the need for interpretation of the Contract Documents, and if not possible to request interpretation at Project meeting, prepare and submit an RFI in the form specified.

   1. RFIs shall originate with Contractor. RFIs submitted by entities other than Contractor will be returned with no response.

2. Coordinate and submit RFIs in a prompt manner so as to avoid delays in Contractor's work or work of subcontractors.

B. Content of the RFI: Include a detailed, legible description of item needing interpretation and the following:

1. Project name.
2. Date.
3. Name of Contractor.
4. Name of Architect
5. RFI number, numbered sequentially.
6. Specification Section number and title and related paragraphs, as appropriate.
7. Drawing number and detail references, as appropriate.
8. Field dimensions and conditions, as appropriate.
9. Contractor's suggested solution(s). If Contractor's solution(s) impact the Contract Time or the Contract Sum, Contractor shall state impact in the RFI.
10. Contractor's signature.
11. Attachments: Include drawings, descriptions, measurements, photos, Product Data, Shop Drawings, and other information necessary to fully describe items needing interpretation.

    a. Supplementary drawings prepared by Contractor shall include dimensions, thicknesses, structural grid references, and details of affected materials, assemblies, and attachments.

C. Hard-Copy RFIs:

1. Identify each page of attachments with the RFI number and sequential page number.

D. Software-Generated RFIs: Software-generated form with substantially the same content as indicated above.

1. Attachments shall be electronic files in Adobe Acrobat PDF format.

E. Architect's Action: Architect will review each RFI, determine action required, and return it. Allow seven working days for Architect's response for each RFI. RFIs received after 1:00 p.m. will be considered as received the following working day.

1. The following RFIs will be returned without action:

    a. Requests for approval of submittals.
    b. Requests for approval of substitutions.
    c. Requests for coordination information already indicated in the Contract Documents.
    d. Requests for adjustments in the Contract Time or the Contract Sum.
    e. Requests for interpretation of Architect's actions on submittals.
    f. Incomplete RFIs or RFIs with numerous errors.

2. Architect's action may include a request for additional information, in which case Architect's time for response will start again.

3. Architect's action on RFIs that may result in a change to the Contract Time or the Contract Sum may be eligible for Contractor to submit Change Proposal according to Division 01 Section "Contract Modification Procedures."

F. On receipt of Architect's action, update the RFI log and immediately distribute the RFI response to affected parties. Review response and notify Architect within seven days if Contractor disagrees with response.

G. RFI Log: Prepare, maintain, and submit a tabular log of RFIs organized by the RFI number. Submit log bi-weekly (at progress meetings). Include the following:

1. Project name.
2. Name and address of Contractor.
3. Name and address of Architect
4. RFI number including RFIs that were dropped and not submitted.
5. RFI description.
6. Date the RFI was submitted.
7. Date Architect's response was received.
8. Identification of related Minor Change in the Work, Construction Change Directive, and Proposal Request, as appropriate.
9. Identification of related Field Order, Work Change Directive, and Proposal Request, as appropriate.

PART 2 - PRODUCTS (Not Used)

PART 3 - EXECUTION (Not Used)

END OF SECTION 013100

SECTION 013200 - CONSTRUCTION PROGRESS DOCUMENTATION

PART 1 - GENERAL

1.1 RELATED DOCUMENTS

A. Drawings and general provisions of the Contract, including General and Supplementary Conditions and other Division 01 Specification Sections, apply to this Section.

1.2 SUMMARY

A. This Section includes administrative and procedural requirements for documenting the progress of construction during performance of the Work, including the following:

1. Preliminary Construction Schedule.
2. Contractor's Construction Schedule.
3. Submittals Schedule.
4. Daily construction reports.
5. Material location reports.
6. Field condition reports.
7. Special reports.

B. Related Sections include the following:
1. Division 01 Section "Payment Procedures" for submitting the Schedule of Values.
2. Division 01 Section "Project Management and Coordination" for submitting and distributing meeting and conference minutes.
3. Division 01 Section "Photographic Documentation" for submitting construction photographs.
4. Division 01 Section "Submittal Procedures" for submitting schedules and reports.
5. Division 01 Section "Quality Requirements" for submitting a schedule of tests and inspections.

1.3 DEFINITIONS

A. Activity: A discrete part of a project that can be identified for planning, scheduling, monitoring, and controlling the construction project. Activities included in a construction schedule consume time and resources.

1. Critical activities are activities on the critical path. They must start and finish on the planned early start and finish times.
2. Predecessor Activity: An activity that precedes another activity in the network.
3. Successor Activity: An activity that follows another activity in the network.

B. Cost Loading: The allocation of the Schedule of Values for the completion of an activity as scheduled. The sum of costs for all activities must equal the total Contract Sum, unless otherwise approved by Architect.

C. Event: The starting or ending point of an activity.

D. Float: The measure of leeway in starting and completing an activity.

1. Float time is not for the exclusive use or benefit of either Owner or Contractor, but is a jointly owned, expiring Project resource available to both parties as needed to meet schedule milestones and Contract completion date.
2. Free float is the amount of time an activity can be delayed without adversely affecting the early start of the successor activity.
3. Total float is the measure of leeway in starting or completing an activity without adversely affecting the planned Project completion date.

E. Fragment: A partial or fragmentary network that breaks down activities into smaller activities for greater detail.

F. Major Area: A story of construction, a separate building, or a similar significant construction element.

G. Milestone: A key or critical point in time for reference or measurement.

H. Network Diagram: A graphic diagram of a network schedule, showing activities and activity relationships.

I. Resource Loading: The allocation of manpower and equipment necessary for the completion of an activity as scheduled.

1.4 SUBMITTALS

A. Qualification Data: For scheduling consultant.

B. Submittals Schedule: Submit six copies of schedule. Arrange the following information in a tabular format:

1. Scheduled date for first submittal.
2. Specification Section number and title.
3. Submittal category (action or informational).
4. Name of subcontractor.
5. Description of the Work covered.
6. Scheduled date for Architect's final release or approval.

C. Preliminary Construction Schedule: Submit 3 opaque copies.

1. Approval of cost-loaded preliminary construction schedule will not constitute approval of Schedule of Values for cost-loaded activities.

D. Preliminary Network Diagram: Submit 3 opaque copies, large enough to show entire network for entire construction period. Show logic ties for activities.

E. Contractor's Construction Schedule: Submit 3 opaque copies of initial schedule, large enough to show entire schedule for entire construction period.

1. Submit an electronic copy of schedule, using software indicated, on CD-R, and labeled to comply with requirements for submittals. Include type of schedule (Initial or Updated) and date on label.

F. Daily Construction Reports: Submit Forms provided by OCC submitted weekly.

G. Material Location Reports: Submit 3 copies at bi-weekly intervals.

H. Field Condition Reports: Submit two copies at time of discovery of differing conditions.

I. Special Reports: Submit two copies at time of unusual event.

1.5 QUALITY ASSURANCE

A. Scheduling Consultant Qualifications: An experienced specialist in CPM scheduling and reporting, with capability of producing CPM reports and diagrams within 24 hours of Architect's request.

B. Pre-scheduling Conference: Conduct conference at Project site to comply with requirements in Division 01 Section "Project Management and Coordination." Review methods and procedures related to the Preliminary Construction Schedule and Contractor's Construction Schedule, including, but not limited to, the following:

1. Review software limitations and content and format for reports.
2. Verify availability of qualified personnel needed to develop and update schedule.
3. Discuss constraints, including phasing, work stages, area separations, interim milestones and partial Owner occupancy.
4. Review delivery dates for Owner-furnished products.
5. Review schedule for work of Owner's separate contracts.
6. Review time required for review of submittals and resubmittals.
7. Review requirements for tests and inspections by independent testing and inspecting agencies.
8. Review time required for completion and startup procedures.
9. Review and finalize list of construction activities to be included in schedule.
10. Review submittal requirements and procedures.
11. Review procedures for updating schedule.

1.6 COORDINATION

A. Coordinate preparation and processing of schedules and reports with performance of construction activities and with scheduling and reporting of separate contractors.

B. Coordinate Contractor's Construction Schedule with the Schedule of Values, list of subcontracts, Submittals Schedule, progress reports, payment requests, and other required schedules and reports.

1. Secure time commitments for performing critical elements of the Work from parties involved.
2. Coordinate each construction activity in the network with other activities and schedule them in proper sequence.

PART 2 - PRODUCTS

2.1 SUBMITTALS SCHEDULE

A. Preparation: Submit a schedule of submittals, arranged in chronological order by dates required by construction schedule. Include time required for review, resubmittal, ordering, manufacturing, fabrication, and delivery when establishing dates.

1. Coordinate Submittals Schedule with list of subcontracts, the Schedule of Values, and Contractor's Construction Schedule.
2. Initial Submittal: Submit concurrently with preliminary bar-chart schedule. Include submittals required during the first 60 days of construction. List those required to maintain orderly progress of the Work and those required early because of long lead time for manufacture or fabrication.

   a. At Contractor's option, show submittals on the Preliminary Construction Schedule, instead of tabulating them separately.

3. Final Submittal: Submit concurrently with the first complete submittal of Contractor's Construction Schedule.

2.2 CONTRACTOR'S CONSTRUCTION SCHEDULE, GENERAL

A. Procedures: Comply with procedures contained in AGC's "Construction Planning & Scheduling."

B. Time Frame: Extend schedule from date established for the Notice to Proceed to date of Final Completion.

1. Contract completion date shall not be changed by submission of a schedule that shows an early completion date, unless specifically authorized by Change Order.

C. Activities: Treat each story or separate area as a separate numbered activity for each principal element of the Work. Comply with the following:

1. Activity Duration: Define activities so no activity is longer than 20 days, unless specifically allowed by Architect.
2. Procurement Activities: Include procurement process activities for the following long lead items and major items, requiring a cycle of more than 60 days, as separate activities in schedule. Procurement cycle activities include, but are not limited to, submittals, approvals, purchasing, fabrication, and delivery.
3. Submittal Review Time: Include review and resubmittal times indicated in Division 01 Section "Submittal Procedures" in schedule. Coordinate submittal review times in Contractor's Construction Schedule with Submittals Schedule.
4. Startup and Testing Time: Include a sufficient number of days for startup and testing.
5. Substantial Completion: Indicate completion in advance of date established for Substantial Completion, and allow time for Architect's administrative procedures necessary for certification of Substantial Completion.

D. Constraints: Include constraints and work restrictions indicated in the Contract Documents and as follows in schedule, and show how the sequence of the Work is affected.

1. Phasing: Arrange list of activities on schedule by phase.
2. Work under More Than One Contract: Include a separate activity for each contract.
3. Work by Owner: Include a separate activity for each portion of the Work performed by Owner.
4. Products Ordered in Advance: Include a separate activity for each product. Include delivery date indicated in Division 01 Section "Summary." Delivery dates indicated stipulate the earliest possible delivery date.
5. Owner-Furnished Products: Include a separate activity for each product. Include delivery date indicated in Division 01 Section "Summary." Delivery dates indicated stipulate the earliest possible delivery date.
6. Work Restrictions: Show the effect of the following items on the schedule:

    a. Coordination with existing construction.
    b. Limitations of continued occupancies.
    c. Uninterruptible services.
    d. Partial occupancy before Substantial Completion.
    e. Use of premises restrictions.
    f. Provisions for future construction.
    g. Seasonal variations.
    h. Environmental control.

7. Work Stages: Indicate important stages of construction for each major portion of the Work, including, but not limited to, the following:

    a. Subcontract awards.
    b. Submittals.
    c. Purchases.
    d. Mockups.
    e. Fabrication.
    f. Sample testing.
    g. Deliveries.
    h. Installation.
    i. Tests and inspections.
    j. Adjusting.
    k. Curing.
    l. Startup and placement into final use and operation.

8. Area Separations: Identify each major area of construction for each major portion of the Work. Indicate where each construction activity within a major area must be sequenced or integrated with other construction activities to provide for the following:

    a. Structural completion.
    b. Permanent space enclosure.
    c. Completion of mechanical installation.
    d. Completion of electrical installation.
    e. Substantial Completion.

E. Milestones: Include milestones indicated in the Contract Documents in schedule, including, but not limited to, the Notice to Proceed, Substantial Completion, and Final Completion.

F. Contract Modifications: For each proposed contract modification and concurrent with its submission, prepare a time-impact analysis using fragnets to demonstrate the effect of the proposed change on the overall project schedule.

G. Computer Software: Prepare schedules using a program that has been developed specifically to manage construction schedules.

2.3 PRELIMINARY CONSTRUCTION SCHEDULE

A. Bar-Chart Schedule: Submit preliminary horizontal bar-chart-type construction schedule within seven days of date established for Notice to Proceed.

B. Preparation: Indicate each significant construction activity separately. Identify first workday of each week with a continuous vertical line. Outline significant construction activities for first 60 days of construction. Include skeleton diagram for the remainder of the Work and a cash requirement prediction based on indicated activities.

2.4 CONTRACTOR'S CONSTRUCTION SCHEDULE (GANTT CHART)

A. Gantt-Chart Schedule: Submit a comprehensive, fully developed, horizontal Gantt-chart-type, Contractor's Construction Schedule within 30 days of date established for the Notice to Proceed. Base schedule on the Preliminary Construction Schedule and whatever updating and feedback was received since the start of Project.

B. Preparation: Indicate each significant construction activity separately. Identify first workday of each week with a continuous vertical line.

1. For construction activities that require 3 months or longer to complete, indicate an estimated completion percentage in 10 percent increments within time bar.

C. Initial Issue of Schedule: Prepare initial network diagram from a list of straight "early start-total float" sort. Identify critical activities. Prepare tabulated reports showing the following:

1. Contractor or subcontractor and the Work or activity.
2. Description of activity.
3. Principal events of activity.
4. Immediate preceding and succeeding activities.
5. Early and late start dates.
6. Early and late finish dates.
7. Activity duration in workdays.
8. Total float or slack time.
9. Average size of workforce.
10. Dollar value of activity (coordinated with the Schedule of Values).

D. Schedule Updating: Concurrent with making revisions to schedule, prepare tabulated reports showing the following:

1. Identification of activities that have changed.
2. Changes in early and late start dates.
3. Changes in early and late finish dates.
4. Changes in activity durations in workdays.
5. Changes in the critical path.
6. Changes in total float or slack time.
7. Changes in the Contract Time.

2.5 REPORTS

A. Daily Construction Reports: Prepare a daily construction report recording the following information concerning events at Project site:

1. List of subcontractors at Project site.
2. List of separate contractors at Project site.
3. Approximate count of personnel at Project site.
4. Equipment at Project site.
5. Material deliveries.
6. High and low temperatures and general weather conditions.
7. Accidents.
8. Meetings and significant decisions.
9. Unusual events (refer to special reports).
10. Stoppages, delays, shortages, and losses.
11. Meter readings and similar recordings.
12. Emergency procedures.
13. Orders and requests of authorities having jurisdiction.
14. Change Orders received and implemented.
15. Construction Change Directives received and implemented.
16. Services connected and disconnected.
17. Equipment or system tests and startups.
18. Partial Completions and occupancies.
19. Substantial Completions authorized.

B. Material Location Reports: At bi-weekly intervals, prepare and submit a comprehensive list of materials delivered to and stored at Project site. List shall be cumulative, showing materials previously reported plus items recently delivered. Include with list a statement of progress on and delivery dates for materials or items of equipment fabricated or stored away from Project site.

C. Field Condition Reports: Immediately on discovery of a difference between field conditions and the Contract Documents, prepare and submit a detailed report. Submit with a request for information. Include a detailed description of the differing conditions, together with recommendations for changing the Contract Documents.

2.6 SPECIAL REPORTS

A. General: Submit special reports directly to Owner within one day of an occurrence. Distribute copies of report to parties affected by the occurrence.

B. Reporting Unusual Events: When an event of an unusual and significant nature occurs at Project site, whether or not related directly to the Work, prepare and submit a

special report. List chain of events, persons participating, response by Contractor's personnel, evaluation of results or effects, and similar pertinent information. Advise Owner in advance when these events are known or predictable.

PART 3 - EXECUTION

3.1 CONTRACTOR'S CONSTRUCTION SCHEDULE

A. Contractor's Construction Schedule Updating: At monthly intervals, update schedule to reflect actual construction progress and activities. Issue schedule one week before each regularly scheduled progress meeting.

1. Revise schedule immediately after each meeting or other activity where revisions have been recognized or made. Issue updated schedule concurrently with the report of each such meeting.
2. Include a report with updated schedule that indicates every change, including, but not limited to, changes in logic, durations, actual starts and finishes, and activity durations.
3. As the Work progresses, indicate Actual Completion percentage for each activity.

B. Distribution: Distribute copies of approved schedule to Architect, Owner, separate contractors, testing and inspecting agencies, and other parties identified by Contractor with a need-to-know schedule responsibility.

1. Post copies in Project meeting rooms and temporary field offices.
2. When revisions are made, distribute updated schedules to the same parties and post in the same locations. Delete parties from distribution when they have completed their assigned portion of the Work and are no longer involved in performance of construction activities.

END OF SECTION 013200

SECTION 013233 - PHOTOGRAPHIC DOCUMENTATION

PART 1 - GENERAL

1.1 SUMMARY

A. Section includes administrative and procedural requirements for the following:

1. Preconstruction photographs.
2. Concealed Work photographs.
3. Periodic construction photographs.
4. Final completion construction photographs.

B. Related Requirements:

1. Section 017700 "Closeout Procedures" for submitting photographic documentation as Project Record Documents at Project closeout.
2. Section 024119 "Selective Demolition" for photographic documentation before selective demolition operations commence.

1.2 INFORMATIONAL SUBMITTALS

A. Key Plan: Submit key plan of Project site and building with notation of vantage points marked for location and direction of each photograph. Indicate elevation or story of construction. Include same information as corresponding photographic documentation.

B. Digital Photographs: Submit image files within three days of taking photographs.

1. Submit photos on CD-ROM or thumb-drive. Include copy of key plan indicating each photograph's location and direction.
2. Identification: Provide the following information with each image description in file metadata tag:

a. Name of Project.
b. Name and contact information for photographer.
c. Name of Architect.
d. Name of Contractor.
e. Date photograph was taken.
f. Description of location, vantage point, and direction.
g. Unique sequential identifier keyed to accompanying key plan.

1.3 FORMATS AND MEDIA

A. Digital Photographs: Provide color images in JPG format, produced by a digital camera with minimum sensor size of 12 megapixels, and at an image resolution of not less than 3200 by 2400 pixels. Use flash in low light levels or backlit conditions.

B. Digital Images: Submit digital media as originally recorded in the digital camera, without alteration, manipulation, editing, or modifications using image-editing software.

C. Metadata: Record accurate date and time from camera.

D. File Names: Name media files with date and sequential numbering suffix.

1.4 CONSTRUCTION PHOTOGRAPHS

A. General: Take photographs with maximum depth of field and in focus.

1. Maintain key plan with each set of construction photographs that identifies each photographic location.

B. Preconstruction Photographs: Before commencement of the Work, take photographs of Project site and surrounding properties, including existing items to remain during construction, from different vantage points.

1. Flag excavation areas & construction limits before taking construction photographs.
2. Take minimum 20 photographs to show existing conditions adjacent to property before starting the Work.
3. Take additional photographs as required to record settlement or cracking of adjacent structures, pavements, and improvements.

C. Concealed Work Photographs: Before proceeding with installing work that will conceal other work, take photographs sufficient in number, with annotated descriptions, to record nature and location of concealed Work, including, but not limited to, the following:

1. Underground utilities.
2. Under slab services.
3. Piping.
4. Electrical conduit.
5. Waterproofing and weather-resistant barriers.

D. Periodic Construction Photographs: Take 20 photographs weekly coinciding with the cutoff date associated with each Application for Payment. Select vantage points to show status of construction and progress since last photographs were taken.

E. Final Completion Construction Photographs: Take 50 photographs after date of Substantial Completion for submission as Project Record Documents.

PART 2 - PRODUCTS (Not Used)

PART 3 - EXECUTION (Not Used)

END OF SECTION 013233

SECTION 013300 - SUBMITTAL PROCEDURES

PART 1 - GENERAL

1.1 RELATED DOCUMENTS

A. Drawings and general provisions of the Contract, including General and Supplementary Conditions and other Division 01 Specification Sections, apply to this Section.

1.2 SUMMARY

A. This Section includes administrative and procedural requirements for submitting Shop Drawings, Product Data, Samples, and other submittals.

B. Related Sections include the following:

1. Division 01 Section "Payment Procedures" for submitting Applications for Payment and the Schedule of Values.
2. Division 01 Section "Project Management and Coordination" for submitting and distributing meeting and conference minutes and for submitting Coordination Drawings.
3. Division 01 Section "Construction Progress Documentation" for submitting schedules and reports, including Contractor's Construction Schedule and the Submittals Schedule.
4. Division 01 Section "Photographic Documentation" for submitting construction photographs.
5. Division 01 Section "Quality Requirements" for submitting test and inspection report and for mockup requirements.
6. Division 01 Section "Closeout Procedures" for submitting warranties.
7. Division 01 Section "Project Record Documents" for submitting Record Drawings, Record Specifications, and Record Product Data.
8. Division 01 Section "Operation and Maintenance Data" for submitting operation and maintenance manuals.
9. Division 01 Section "Demonstration and Training" for submitting videotapes of demonstration of equipment and training of Owner's personnel.
10. Divisions 02 through 49 Sections for specific requirements for submittals in those Sections.

1.3 DEFINITIONS

A. Action Submittals: Written and graphic information that requires Architect's responsive action.

B. Informational Submittals: Written information that does not require Architect's responsive action. Submittals may be rejected for not complying with requirements.

1.4 SUBMITTAL PROCEDURES

A. General: Electronic copies of CAD Drawings of the Contract Drawings can be obtained from the Architect for Contractor's use in preparing submittals, at the cost $250 per sheet, and signing a release form.

B. Coordination: Coordinate preparation and processing of submittals with performance of construction activities.

1. Coordinate each submittal with fabrication, purchasing, testing, delivery, other submittals, and related activities that require sequential activity.
2. Coordinate transmittal of different types of submittals for related parts of the Work so processing will not be delayed because of need to review submittals concurrently for coordination.

a. Architect has the right to withhold action on a submittal requiring coordination with other submittals until related submittals are received.

C. Submittals Schedule: Comply with requirements in Division 01 Section "Construction Progress Documentation" for list of submittals and time requirements for scheduled performance of related construction activities.

D. Processing Time: Allow enough time for submittal review, including time for resubmittals, as follows. Time for review shall commence on Architect's receipt of submittal. No extension of the Contract Time will be authorized because of failure to transmit submittals enough in advance of the Work to permit processing, including resubmittals.

1. Initial Review: Allow 15 days for initial review of each submittal. Allow additional time if coordination with subsequent submittals is required. Architect will advise Contractor when a submittal being processed must be delayed for coordination.
2. Intermediate Review: If intermediate submittal is necessary, process it in same manner as initial submittal.
3. Resubmittal Review: Allow 15 days for review of each resubmittal.
4. Sequential Review: Where sequential review of submittals by Architect's consultants, Owner, or other parties is indicated, allow 21 days for initial review of each submittal.

E. Identification: Place a permanent label or title block on each submittal for identification.

1. Indicate name of firm or entity that prepared each submittal on label or title block.
2. Provide a space approximately 6 by 8 inches (150 by 200 mm) on label or beside title block to record Contractor's review and approval markings and action taken by Architect.
3. Include the following information on label for processing and recording action taken:

a. Project name.
b. Date.
c. Name and address of Architect.
d. Name and address of Contractor.
e. Name and address of subcontractor.

f. Name and address of supplier.
g. Name of manufacturer.
h. Submittal number or other unique identifier, including revision identifier.

1) Submittal number shall use Specification Section number followed by a decimal point and then a sequential number (e.g., 061000.01). Resubmittals shall include an alphabetic suffix after another decimal point (e.g., 061000.01.A).

i. Number and title of appropriate Specification Section.
j. Drawing number and detail references, as appropriate.
k. Location(s) where product is to be installed, as appropriate.
l. Other necessary identification.

F. Deviations: Highlight, encircle, or otherwise specifically identify deviations from the Contract Documents on submittals.

G. Additional Copies: Unless additional copies are required for final submittal, and unless Architect observes noncompliance with provisions in the Contract Documents, initial submittal may serve as final submittal.

H. Transmittal: Package each submittal individually and appropriately for transmittal and handling. Transmit each submittal using a transmittal form. Architect will return submittals, without review, received from sources other than Contractor.

1. Transmittal Form: Provide locations on form for the following information:

a. Project name.
b. Date.
c. Destination (To:).
d. Source (From:).
e. Names of subcontractor, manufacturer, and supplier.
f. Category and type of submittal.
g. Submittal purpose and description.
h. Specification Section number and title.
i. Drawing number and detail references, as appropriate.
j. Transmittal number, numbered consecutively.
k. Submittal and transmittal distribution record.
l. Remarks.
m. Signature of transmitter.

2. On an attached separate sheet, prepared on Contractor's letterhead, record relevant information, requests for data, revisions other than those requested by Architect on previous submittals, and deviations from requirements in the Contract Documents, including minor variations and limitations. Include same label information as related submittal.

I. Resubmittals: Make resubmittals in same form and number of copies as initial submittal.

1. Note date and content of previous submittal.
2. Note date and content of revision in label or title block and clearly indicate extent of revision.
3. Resubmit submittals until they are marked "Exceptions Taken as Noted" or "No Exception Taken".

J. Distribution: Furnish copies of final submittals to manufacturers, subcontractors, suppliers, fabricators, installers, authorities having jurisdiction, and others as necessary for performance of construction activities. Show distribution on transmittal forms.

K. Use for Construction: Use only final submittals with mark indicating "Exceptions Taken as Noted" or "no Exception Taken".

1.5 CONTRACTOR'S USE OF ARCHITECT'S CAD FILES

A. General: At Contractor's written request, copies of Architect's CAD files will be provided to Contractor for Contractor's use in connection with Project, subject to the following conditions:

1. Contractor must sign Architect's Electric Document Release Form which will be made available upon request.

2. Contractor will be charged a fee per sheet of drawings the amount of which is indicated in the Supplemental General Conditions.

PART 2 - PRODUCTS

2.1 ACTION SUBMITTALS

A. General: Prepare and submit Action Submittals required by individual Specification Sections.

1. Submit electronic submittals directly to extranet specifically established for Project.

B. Product Data: Collect information into a single submittal for each element of construction and type of product or equipment.

1. If information must be specially prepared for submittal because standard printed data are not suitable for use, submit as Shop Drawings, not as Product Data.
2. Mark each copy of each submittal to show which products and options are applicable.
3. Include the following information, as applicable:

a. Manufacturer's written recommendations.
b. Manufacturer's product specifications.
c. Manufacturer's installation instructions.
d. Standard color charts.
e. Manufacturer's catalog cuts.
f. Wiring diagrams showing factory-installed wiring.
g. Printed performance curves.
h. Operational range diagrams.
i. Mill reports.
j. Standard product operation and maintenance manuals.
k. Compliance with specified referenced standards.
l. Testing by recognized testing agency.

m. Application of testing agency labels and seals.
n. Notation of coordination requirements.

4. Submit Product Data before or concurrent with Samples.
5. Number of Copies: Submit 6 copies of Product Data, unless otherwise indicated. Architect will return four copies. Mark up and retain one returned copy as a Project Record Document.

C. Shop Drawings: Prepare Project-specific information, drawn accurately to scale. Do not base Shop Drawings on reproductions of the Contract Documents or standard printed data.

1. Preparation: Fully illustrate requirements in the Contract Documents. Include the following information, as applicable:

a. Dimensions.
b. Identification of products.
c. Fabrication and installation drawings.
d. Roughing-in and setting diagrams.
e. Wiring diagrams showing field-installed wiring, including power, signal, and control wiring.
f. Shopwork manufacturing instructions.
g. Templates and patterns.
h. Schedules.
i. Design calculations.
j. Compliance with specified standards.
k. Notation of coordination requirements.
l. Notation of dimensions established by field measurement.
m. Relationship to adjoining construction clearly indicated.
n. Seal and signature of professional engineer if specified.
o. Wiring Diagrams: Differentiate between manufacturer-installed and field-installed wiring.

2. Sheet Size: Except for templates, patterns, and similar full-size drawings, submit Shop Drawings on sheets at least 8-1/2 by 11 inches (215 by 280 mm) but no larger than 30 by 40 inches (750 by 1000 mm).
3. Number of Copies: Submit six opaque copies of each submittal, unless copies are required for operation and maintenance manuals. Submit five copies where copies are required for operation and maintenance manuals. Architect will retain two copies; remainder will be returned. Mark up and retain one returned copy as a Project Record Drawing.

D. Samples: Submit Samples for review of kind, color, pattern, and texture for a check of these characteristics with other elements and for a comparison of these characteristics between submittal and actual component as delivered and installed.

1. Transmit Samples that contain multiple, related components such as accessories together in one submittal package.
2. Identification: Attach label on unexposed side of Samples that includes the following:

a. Generic description of Sample.
b. Product name and name of manufacturer.

c. Sample source.
d. Number and title of appropriate Specification Section.

3. Disposition: Maintain sets of approved Samples at Project site, available for quality-control comparisons throughout the course of construction activity. Sample sets may be used to determine final acceptance of construction associated with each set.

   a. Samples that may be incorporated into the Work are indicated in individual Specification Sections. Such Samples must be in an undamaged condition at time of use.
   b. Samples not incorporated into the Work, or otherwise designated as Owner's property, are the property of Contractor.

4. Samples for Initial Selection: Submit manufacturer's color charts consisting of units or sections of units showing the full range of colors, textures, and patterns available.

   a. Number of Samples: Submit one full set(s) of available choices where color, pattern, texture, or similar characteristics are required to be selected from manufacturer's product line. Architect will return submittal with options selected.

5. Samples for Verification: Submit full-size units or Samples of size indicated, prepared from same material to be used for the Work, cured and finished in manner specified, and physically identical with material or product proposed for use, and that show full range of color and texture variations expected. Samples include, but are not limited to, the following: partial sections of manufactured or fabricated components; small cuts or containers of materials; complete units of repetitively used materials; swatches showing color, texture, and pattern; color range sets; and components used for independent testing and inspection.

   a. Number of Samples: Submit three sets of Samples. Architect will retain two Sample sets; remainder will be returned. Mark up and retain one returned Sample set as a Project Record Sample.

      1) Submit a single Sample where assembly details, workmanship, fabrication techniques, connections, operation, and other similar characteristics are to be demonstrated.
      2) If variation in color, pattern, texture, or other characteristic is inherent in material or product represented by a Sample, submit at least three sets of paired units that show approximate limits of variations.

E. Product Schedule or List: As required in individual Specification Sections, prepare a written summary indicating types of products required for the Work and their intended location. Include the following information in tabular form:

1. Type of product. Include unique identifier for each product.
2. Number and name of room or space.
3. Location within room or space.
4. Number of Copies: Submit three copies of product schedule or list, unless otherwise indicated. Architect will return two copies.

a. Mark up and retain one returned copy as a Project Record Document.

F. Contractor's Construction Schedule: Comply with requirements specified in Division 01 Section "Construction Progress Documentation" for Construction Manager's action.

G. Submittals Schedule: Comply with requirements specified in Division 01 Section "Construction Progress Documentation."

H. Application for Payment: Comply with requirements specified in Division 01 Section "Payment Procedures."

I. Schedule of Values: Comply with requirements specified in Division 01 Section "Payment Procedures."

J. Subcontract List: Prepare a written summary identifying individuals or firms proposed for each portion of the Work, including those who are to furnish products or equipment fabricated to a special design. Include the following information in tabular form:

1. Name, address, and telephone number of entity performing subcontract or supplying products.
2. Number and title of related Specification Section(s) covered by subcontract.
3. Drawing number and detail references, as appropriate, covered by subcontract.
4. Number of Copies: Submit three copies of subcontractor list, unless otherwise indicated. Architect will return two copies.

a. Mark up and retain one returned copy as a Project Record Document.

2.2 INFORMATIONAL SUBMITTALS

A. General: Prepare and submit Informational Submittals required by other Specification Sections.

1. Number of Copies: Submit two copies of each submittal, unless otherwise indicated. Architect will not return copies.
2. Certificates and Certifications: Provide a notarized statement that includes signature of entity responsible for preparing certification. Certificates and certifications shall be signed by an officer or other individual authorized to sign documents on behalf of that entity.
3. Test and Inspection Reports: Comply with requirements specified in Division 01 Section "Quality Requirements."

B. Coordination Drawings: Comply with requirements specified in Division 01 Section "Project Management and Coordination."

C. Contractor's Construction Schedule: Comply with requirements specified in Division 01 Section "Construction Progress Documentation."

D. Qualification Data: Prepare written information that demonstrates capabilities and experience of firm or person. Include lists of completed projects with project names and addresses, names and addresses of architects and owners, and other information specified.

E. Welding Certificates: Prepare written certification that welding procedures and personnel comply with requirements in the Contract Documents. Submit record of Welding Procedure Specification (WPS) and Procedure Qualification Record (PQR) on AWS forms. Include names of firms and personnel certified.

F. Installer Certificates: Prepare written statements on manufacturer's letterhead certifying that Installer complies with requirements in the Contract Documents and, where required, is authorized by manufacturer for this specific Project.

G. Manufacturer Certificates: Prepare written statements on manufacturer's letterhead certifying that manufacturer complies with requirements in the Contract Documents. Include evidence of manufacturing experience where required.

H. Product Certificates: Prepare written statements on manufacturer's letterhead certifying that product complies with requirements in the Contract Documents.

I. Material Certificates: Prepare written statements on manufacturer's letterhead certifying that material complies with requirements in the Contract Documents.

J. Material Test Reports: Prepare reports written by a qualified testing agency, on testing agency's standard form, indicating and interpreting test results of material for compliance with requirements in the Contract Documents.

K. Product Test Reports: Prepare written reports indicating current product produced by manufacturer complies with requirements in the Contract Documents. Base reports on evaluation of tests performed by manufacturer and witnessed by a qualified testing agency, or on comprehensive tests performed by a qualified testing agency.

L. Research/Evaluation Reports: Prepare written evidence, from a model code organization acceptable to authorities having jurisdiction, that product complies with building code in effect for Project. Include the following information:

1. Name of evaluation organization.
2. Date of evaluation.
3. Time period when report is in effect.
4. Product and manufacturers' names.
5. Description of product.
6. Test procedures and results.
7. Limitations of use.

M. Schedule of Tests and Inspections: Comply with requirements specified in Division 01 Section "Quality Requirements."

N. Preconstruction Test Reports: Prepare reports written by a qualified testing agency, on testing agency's standard form, indicating and interpreting results of tests performed before installation of product, for compliance with performance requirements in the Contract Documents.

O. Compatibility Test Reports: Prepare reports written by a qualified testing agency, on testing agency's standard form, indicating and interpreting results of compatibility tests performed before installation of product. Include written recommendations for primers and substrate preparation needed for adhesion.

P. Field Test Reports: Prepare reports written by a qualified testing agency, on testing agency's standard form, indicating and interpreting results of field tests performed either during installation of product or after product is installed in its final location, for compliance with requirements in the Contract Documents.

Q. Maintenance Data: Prepare written and graphic instructions and procedures for operation and normal maintenance of products and equipment. Comply with requirements specified in Division 01 Section "Operation and Maintenance Data."

R. Design Data: Prepare written and graphic information, including, but not limited to, performance and design criteria, list of applicable codes and regulations, and calculations. Include list of assumptions and other performance and design criteria and a summary of loads. Include load diagrams if applicable. Provide name and version of software, if any, used for calculations. Include page numbers.

S. Manufacturer's Instructions: Prepare written or published information that documents manufacturer's recommendations, guidelines, and procedures for installing or operating a product or equipment. Include name of product and name, address, and telephone number of manufacturer. Include the following, as applicable:

1. Preparation of substrates.
2. Required substrate tolerances.
3. Sequence of installation or erection.
4. Required installation tolerances.
5. Required adjustments.
6. Recommendations for cleaning and protection.

T. Manufacturer's Field Reports: Prepare written information documenting factory-authorized service representative's tests and inspections. Include the following, as applicable:

1. Name, address, and telephone number of factory-authorized service representative making report.
2. Statement on condition of substrates and their acceptability for installation of product.
3. Statement that products at Project site comply with requirements.
4. Summary of installation procedures being followed, whether they comply with requirements and, if not, what corrective action was taken.
5. Results of operational and other tests and a statement of whether observed performance complies with requirements.
6. Statement whether conditions, products, and installation will affect warranty.
7. Other required items indicated in individual Specification Sections.

U. Insurance Certificates and Bonds: Prepare written information indicating current status of insurance or bonding coverage. Include name of entity covered by insurance or bond, limits of coverage, amounts of deductibles, if any, and term of the coverage.

V. Construction Photographs: Comply with requirements specified in Division 01 Section "Photographic Documentation."

W. Material Safety Data Sheets (MSDSs): Submit information directly to Owner; do not submit to Architect.

1. Architect will not review submittals that include MSDSs and will return the entire submittal for resubmittal.

2.3 DELEGATED DESIGN

A. Performance and Design Criteria: Where professional design services or certifications by a design professional are specifically required of Contractor by the Contract Documents, provide products and systems complying with specific performance and design criteria indicated.

1. If criteria indicated are not sufficient to perform services or certification required, submit a written request for additional information to Architect.

B. Delegated-Design Submittal: In addition to Shop Drawings, Product Data, and other required submittals, submit three copies of a statement, signed and sealed by the responsible design professional, for each product and system specifically assigned to Contractor to be designed or certified by a design professional.

1. Indicate that products and systems comply with performance and design criteria in the Contract Documents. Include list of codes, loads, and other factors used in performing these services.

PART 3 - EXECUTION

3.1 CONTRACTOR'S REVIEW

A. Review each submittal and check for coordination with other Work of the Contract and for compliance with the Contract Documents. Note corrections and field dimensions. Mark with approval stamp before submitting to Architect.

B. Approval Stamp: Stamp each submittal with a uniform, approval stamp. Include Project name and location, submittal number, Specification Section title and number, name of reviewer, date of Contractor's approval, and statement certifying that submittal has been reviewed, checked, and approved for compliance with the Contract Documents.

3.2 ARCHITECT'S ACTION

A. General: Architect will not review submittals that do not bear Contractor's approval stamp and will return them without action.

B. Action Submittals: Architect will review each submittal, make marks to indicate corrections or modifications required, and return it. Architect will stamp each submittal with an action stamp and will mark stamp appropriately to indicate action taken, as follows:

1. No Exceptions Taken

2. Exceptions Taken as Noted

3. Exceptions Taken as Noted / Revise and Resubmit for Record

4. Revise and Resubmit

5. Rejected

6. No Action Taken

C. Informational Submittals: Architect will review each submittal and will not return it, or will return it if it does not comply with requirements. Architect will forward each submittal to appropriate party.

D. Partial submittals are not acceptable, will be considered non-responsive, and will be returned without review.

E. Submittals not required by the Contract Documents may not be reviewed and may be discarded.

END OF SECTION 013300

SECTION 014000 - QUALITY REQUIREMENTS

PART 1 - GENERAL

1.1 RELATED DOCUMENTS

A. Drawings and general provisions of the Contract, including General and Supplementary Conditions and other Division 01 Specification Sections, apply to this Section.

1.2 SUMMARY

A. This Section includes administrative and procedural requirements for quality assurance and quality control.

1.3 DEFINITIONS

A. Quality-Assurance Services: Activities, actions, and procedures performed before and during execution of the Work to guard against defects and deficiencies and substantiate that proposed construction will comply with requirements.

B. Quality-Control Services: Tests, inspections, procedures, and related actions during and after execution of the Work to evaluate that actual products incorporated into the Work and completed construction comply with requirements. Services do not include contract enforcement activities performed by Architect

C. Mockups: Full-size, physical assemblies that are constructed on-site. Mockups are used to verify selections made under sample submittals, to demonstrate aesthetic effects and, where indicated, qualities of materials and execution, and to review construction, coordination, testing, or operation; they are not Samples. Approved mockups establish the standard by which the Work will be judged.

D. Laboratory Mockups: Full-size, physical assemblies that are constructed at testing facility to verify performance characteristics.

E. Preconstruction Testing: Tests and inspections that are performed specifically for the Project before products and materials are incorporated into the Work to verify performance or compliance with specified criteria.

F. Product Testing: Tests and inspections that are performed by an NRTL, an NVLAP, or a testing agency qualified to conduct product testing and acceptable to authorities having jurisdiction, to establish product performance and compliance with industry standards.

G. Source Quality-Control Testing: Tests and inspections that are performed at the source, i.e., plant, mill, factory, or shop.

H. Field Quality-Control Testing: Tests and inspections that are performed on-site for installation of the Work and for completed Work.

I. Testing Agency: An entity engaged to perform specific tests, inspections, or both. Testing laboratory shall mean the same as testing agency.

J. Installer/Applicator/Erector: Contractor or another entity engaged by Contractor as an employee, Subcontractor, or Sub-subcontractor, to perform a particular construction operation, including installation, erection, application, and similar operations.

1. Using a term such as "carpentry" does not imply that certain construction activities must be performed by accredited or unionized individuals of a corresponding generic name, such as "carpenter." It also does not imply that requirements specified apply exclusively to tradespeople of the corresponding generic name.

K. Experienced: When used with an entity, "experienced" means having successfully completed a minimum of five previous projects similar in size and scope to this Project; being familiar with special requirements indicated; and having complied with requirements of authorities having jurisdiction.

1.4 CONFLICTING REQUIREMENTS

A. General: If compliance with two or more standards is specified and the standards establish different or conflicting requirements for minimum quantities or quality levels, comply with the most stringent requirement. Refer uncertainties and requirements that are different, but apparently equal, to Architect for a decision before proceeding.

B. Minimum Quantity or Quality Levels: The quantity or quality level shown or specified shall be the minimum provided or performed. The actual installation may comply exactly with the minimum quantity or quality specified, or it may exceed the minimum within reasonable limits. To comply with these requirements, indicated numeric values are minimum or maximum, as appropriate, for the context of requirements. Refer uncertainties to Architect for a decision before proceeding.

1.5 SUBMITTALS

A. Qualification Data: For testing agencies specified in "Quality Assurance" Article to demonstrate their capabilities and experience. Include proof of qualifications in the form of a recent report on the inspection of the testing agency by a recognized authority.

B. Schedule of Tests and Inspections: Prepare in tabular form and include the following:

1. Specification Section number and title.
2. Description of test and inspection.
3. Identification of applicable standards.
4. Identification of test and inspection methods.
5. Number of tests and inspections required.
6. Time schedule or time span for tests and inspections.
7. Entity responsible for performing tests and inspections.
8. Requirements for obtaining samples.

9. Unique characteristics of each quality-control service.

C. Reports: Prepare and submit certified written reports that include the following:

1. Date of issue.
2. Project title and number.
3. Name, address, and telephone number of testing agency.
4. Dates and locations of samples and tests or inspections.
5. Names of individuals making tests and inspections.
6. Description of the Work and test and inspection method.
7. Identification of product and Specification Section.
8. Complete test or inspection data.
9. Test and inspection results and an interpretation of test results.
10. Record of temperature and weather conditions at time of sample taking and testing and inspecting.
11. Comments or professional opinion on whether tested or inspected Work complies with the Contract Document requirements.
12. Name and signature of laboratory inspector.
13. Recommendations on retesting and reinspecting.

D. Permits, Licenses, and Certificates: For Owner's records, submit copies of permits, licenses, certifications, inspection reports, releases, jurisdictional settlements, notices, receipts for fee payments, judgments, correspondence, records, and similar documents, established for compliance with standards and regulations bearing on performance of the Work.

1.6 QUALITY ASSURANCE

A. General: Qualifications paragraphs in this Article establish the minimum qualification levels required; individual Specification Sections specify additional requirements.

B. Installer Qualifications: A firm or individual experienced in installing, erecting, or assembling work similar in material, design, and extent to that indicated for this Project, whose work has resulted in construction with a record of successful in-service performance.

C. Manufacturer Qualifications: A firm experienced in manufacturing products or systems similar to those indicated for this Project and with a record of successful in-service performance, as well as sufficient production capacity to produce required units.

D. Fabricator Qualifications: A firm experienced in producing products similar to those indicated for this Project and with a record of successful in-service performance, as well as sufficient production capacity to produce required units.

E. Professional Engineer Qualifications: A professional engineer who is legally qualified to practice in jurisdiction where Project is located and who is experienced in providing engineering services of the kind indicated. Engineering services are defined as those performed for installations of the system, assembly, or products that are similar to those indicated for this Project in material, design, and extent.

F. Specialists: Certain sections of the Specifications require that specific construction activities shall be performed by entities who are recognized experts in those operations.

Specialists shall satisfy qualification requirements indicated and shall be engaged for the activities indicated.

1. Requirement for specialists shall not supersede building codes and regulations governing the Work.

G. Testing Agency Qualifications: An NRTL, an NVLAP, or an independent agency with the experience and capability to conduct testing and inspecting indicated, as documented according to ASTM E 548; and with additional qualifications specified in individual Sections; and where required by authorities having jurisdiction, that is acceptable to authorities.

1. NRTL: A nationally recognized testing laboratory according to 29 CFR 1910.7.
2. NVLAP: A testing agency accredited according to NIST's National Voluntary Laboratory Accreditation Program.

H. Factory-Authorized Service Representative Qualifications: An authorized representative of manufacturer who is trained and approved by manufacturer to inspect installation of manufacturer's products that are similar in material, design, and extent to those indicated for this Project.

I. Preconstruction Testing: Where testing agency is indicated to perform preconstruction testing for compliance with specified requirements for performance and test methods, comply with the following:

1. Contractor responsibilities include the following:

a. Provide test specimens representative of proposed products and construction.
b. Submit specimens in a timely manner with sufficient time for testing and analyzing results to prevent delaying the Work.
c. Provide sizes and configurations of test assemblies, mockups, and laboratory mockups to adequately demonstrate capability of products to comply with performance requirements.
d. Build site-assembled test assemblies and mockups using installers who will perform same tasks for Project.
e. Build laboratory mockups at testing facility using personnel, products, and methods of construction indicated for the completed Work.
f. When testing is complete, remove test specimens, assemblies, mockups, and laboratory mockups; do not reuse products on Project.

2. Testing Agency Responsibilities: Submit a certified written report of each test, inspection, and similar quality-assurance service to Architect, with copy to Contractor. Interpret tests and inspections and state in each report whether tested and inspected work complies with or deviates from the Contract Documents.

J. Mockups: Before installing portions of the Work requiring mockups, build mockups for each form of construction and finish required to comply with the following requirements, using materials indicated for the completed Work:

1. Build mockups in location and of size indicated or, if not indicated, as directed by Architect.

2. Notify Architect seven days in advance of dates and times when mockups will be constructed.
3. Demonstrate the proposed range of aesthetic effects and workmanship.
4. Obtain Architect's approval of mockups before starting work, fabrication, or construction.

    a. Allow seven days for initial review and each re-review of each mockup.

5. Maintain mockups during construction in an undisturbed condition as a standard for judging the completed Work.
6. Demolish and remove mockups when directed, unless otherwise indicated.

K. Laboratory Mockups: Comply with requirements of preconstruction testing and those specified in individual Sections in Divisions 02 through 49.

1.7 QUALITY CONTROL

A. Owner Responsibilities: Where quality-control services are indicated as Owner's responsibility, Owner will engage a qualified testing agency to perform these services.

1. Owner will furnish Contractor with names, addresses, and telephone numbers of testing agencies engaged and a description of types of testing and inspecting they are engaged to perform.
2. Costs for retesting and reinspecting construction that replaces or is necessitated by work that failed to comply with the Contract Documents will be charged to Contractor.

B. Tests and inspections not explicitly assigned to Owner are Contractor's responsibility. Unless otherwise indicated, provide quality-control services specified and those required by authorities having jurisdiction. Perform quality-control services required of Contractor by authorities having jurisdiction, whether specified or not.

1. Where services are indicated as Contractor's responsibility, engage a qualified testing agency to perform these quality-control services.

    a. Contractor shall not employ same entity engaged by Owner, unless agreed to in writing by Owner.

2. Notify testing agencies at least 24 hours in advance of time when Work that requires testing or inspecting will be performed.
3. Where quality-control services are indicated as Contractor's responsibility, submit a certified written report, in duplicate, of each quality-control service.
4. Testing and inspecting requested by Contractor and not required by the Contract Documents are Contractor's responsibility.
5. Submit additional copies of each written report directly to authorities having jurisdiction, when they so direct.

C. Manufacturer's Field Services: Where indicated, engage a factory-authorized service representative to inspect field-assembled components and equipment installation, including service connections. Report results in writing as specified in Division 01 Section "Submittal Procedures."

D. Retesting/Reinspecting: Regardless of whether original tests or inspections were Contractor's responsibility, provide quality-control services, including retesting and reinspecting, for construction that replaced Work that failed to comply with the Contract Documents.

E. Testing Agency Responsibilities: Cooperate with Architect and Contractor in performance of duties. Provide qualified personnel to perform required tests and inspections.

1. Notify Architect and Contractor promptly of irregularities or deficiencies observed in the Work during performance of its services.
2. Determine the location from which test samples will be taken and in which in-situ tests are conducted.
3. Conduct and interpret tests and inspections and state in each report whether tested and inspected work complies with or deviates from requirements.
4. Submit a certified written report, in duplicate, of each test, inspection, and similar quality-control service through Contractor.
5. Do not release, revoke, alter, or increase the Contract Document requirements or approve or accept any portion of the Work.
6. Do not perform any duties of Contractor.

F. Associated Services: Cooperate with agencies performing required tests, inspections, and similar quality-control services, and provide reasonable auxiliary services as requested. Notify agency sufficiently in advance of operations to permit assignment of personnel. Provide the following:

1. Access to the Work.
2. Incidental labor and facilities necessary to facilitate tests and inspections.
3. Adequate quantities of representative samples of materials that require testing and inspecting. Assist agency in obtaining samples.
4. Facilities for storage and field curing of test samples.
5. Delivery of samples to testing agencies.
6. Preliminary design mix proposed for use for material mixes that require control by testing agency.
7. Security and protection for samples and for testing and inspecting equipment at Project site.

G. Coordination: Coordinate sequence of activities to accommodate required quality-assurance and -control services with a minimum of delay and to avoid necessity of removing and replacing construction to accommodate testing and inspecting.

1. Schedule times for tests, inspections, obtaining samples, and similar activities.

H. Schedule of Tests and Inspections: Prepare a schedule of tests, inspections, and similar quality-control services required by the Contract Documents. Submit schedule within 30 days of date established for the Notice to Proceed.

1. Distribution: Distribute schedule to Owner, Architect, testing agencies, and each party involved in performance of portions of the Work where tests and inspections are required.

1.8 SPECIAL TESTS AND INSPECTIONS

A. Special Tests and Inspections: Owner will engage a qualified testing agency to conduct special tests and inspections required by authorities having jurisdiction as the responsibility of Owner, and as follows:

1. Verifying that manufacturer maintains detailed fabrication and quality-control procedures and reviewing the completeness and adequacy of those procedures to perform the Work.
2. Notifying Architect and Contractor promptly of irregularities and deficiencies observed in the Work during performance of its services.
3. Submitting a certified written report of each test, inspection, and similar quality-control service to Architect with copy to Contractor and to authorities having jurisdiction.
4. Submitting a final report of special tests and inspections at Substantial Completion, which includes a list of unresolved deficiencies.
5. Interpreting tests and inspections and stating in each report whether tested and inspected work complies with or deviates from the Contract Documents.
6. Retesting and reinspecting corrected work.

PART 2 - PRODUCTS (Not Used)

PART 3 - EXECUTION

3.1 TEST AND INSPECTION LOG

A. Prepare a record of tests and inspections. Include the following:

1. Date test or inspection was conducted.
2. Description of the Work tested or inspected.
3. Date test or inspection results were transmitted to Architect.
4. Identification of testing agency or special inspector conducting test or inspection.

B. Maintain log at Project site. Post changes and modifications as they occur. Provide access to test and inspection log for Architect's reference during normal working hours.

3.2 REPAIR AND PROTECTION

A. General: On completion of testing, inspecting, sample taking, and similar services, repair damaged construction and restore substrates and finishes.

1. Provide materials and comply with installation requirements specified in other Specification Sections. Restore patched areas and extend restoration into adjoining areas with durable seams that are as invisible as possible.
2. Comply with the Contract Document requirements for Division 01 Section "Cutting and Patching."

B. Protect construction exposed by or for quality-control service activities.

C. Repair and protection are Contractor's responsibility, regardless of the assignment of responsibility for quality-control services.

END OF SECTION 014000

SECTION 014200 - REFERENCES

PART 1 - GENERAL

1.1 RELATED DOCUMENTS

A. Drawings and general provisions of the Contract, including General and Supplementary Conditions and other Division 01 Specification Sections, apply to this Section.

1.2 DEFINITIONS

A. General: Basic Contract definitions are included in the Conditions of the Contract.

B. "Approved": When used to convey Architect's action on Contractor's submittals, applications, and requests, "approved" is limited to Architect's duties and responsibilities as stated in the Conditions of the Contract.

C. "Directed": A command or instruction by Architect. Other terms including "requested," "authorized," "selected," "required," and "permitted" have the same meaning as "directed."

D. "Indicated": Requirements expressed by graphic representations or in written form on Drawings, in Specifications, and in other Contract Documents. Other terms including "shown," "noted," "scheduled," and "specified" have the same meaning as "indicated."

E. "Regulations": Laws, ordinances, statutes, and lawful orders issued by authorities having jurisdiction, and rules, conventions, and agreements within the construction industry that control performance of the Work.

F. "Furnish": Supply and deliver to Project site, ready for unloading, unpacking, assembly, installation, and similar operations.

G. "Install": Operations at Project site including unloading, temporarily storing, unpacking, assembling, erecting, placing, anchoring, applying, working to dimension, finishing, curing, protecting, cleaning, and similar operations.

H. "Provide": Furnish and install, complete and ready for the intended use.

I. "Project Site": Space available for performing construction activities. The extent of Project site is shown on Drawings and may or may not be identical with the description of the land on which Project is to be built.

1.3 INDUSTRY STANDARDS

A. Applicability of Standards: Unless the Contract Documents include more stringent requirements, applicable construction industry standards have the same force and effect as if bound or copied directly into the Contract Documents to the extent

referenced. Such standards are made a part of the Contract Documents by reference.

B. Publication Dates: Comply with standards in effect as of date of the Contract Documents unless otherwise indicated.

C. Copies of Standards: Each entity engaged in construction on Project should be familiar with industry standards applicable to its construction activity. Copies of applicable standards are not bound with the Contract Documents.

1. Where copies of standards are needed to perform a required construction activity, obtain copies directly from publication source.

1.4 ABBREVIATIONS AND ACRONYMS

A. Industry Organizations: Where abbreviations and acronyms are used in Specifications or other Contract Documents, they shall mean the recognized name of the entities indicated in Thomson Gale's "Encyclopedia of Associations" or in Columbia Books' "National Trade & Professional Associations of the U.S."

END OF SECTION 014200

SECTION 014500 - CUTTING AND PATCHING

PART 1 - GENERAL

1.1 RELATED DOCUMENTS

A. Drawings and general provisions of the Contract, including General and Supplementary Conditions and other Division 1 Specification Sections, apply to this Section.

1.2 SUMMARY

A. This Section includes administrative and procedural requirements for cutting and patching.

B. Related Sections: The following Sections contain requirements that relate to this Section:

1. Division 2 Section "Selective Demolition" for demolition of selected portions of the building for alterations.
2. Refer to other Sections for specific requirements and limitations applicable to cutting and patching individual parts of the Work.

a. Requirements of this Section apply to mechanical and electrical installations.

1.3 SUBMITTALS

A. Cutting and Patching Proposal: Submit a proposal describing procedures well in advance of the time cutting and patching will be performed if the Owner requires approval of these procedures before proceeding. Request approval to proceed. Include the following information, as applicable, in the proposal:

1. Describe the extent of cutting and patching required. Show how it will be performed and indicate why it cannot be avoided.
2. Describe anticipated results in terms of changes to existing construction. Include changes to structural elements and operating components as well as changes in the building's appearance and other significant visual elements.
3. List products to be used and firms or entities that will perform Work.
4. Indicate dates when cutting and patching will be performed.
5. Utilities: List utilities that cutting and patching procedures will disturb or affect. List utilities that will be relocated and those that will be temporarily out-of-service. Indicate how long service will be disrupted.
6. Where cutting and patching involves adding reinforcement to structural elements, submit details and engineering calculations showing integration of reinforcement with the original structure.
7. Approval by the Architect to proceed with cutting and patching does not waive the Architect's right to later require complete removal and replacement of unsatisfactory work.

1.4 QUALITY ASSURANCE

A. Requirements for Structural Work: Do not cut and patch structural elements in a manner that would change their load-carrying capacity or load-deflection ratio.
1. Obtain approval of the cutting and patching proposal before cutting and patching the following structural elements:

a. Bearing and retaining walls.

b. Structural concrete.
c. Structural steel.
d. Lintels.
e. Structural decking.
f. Miscellaneous structural metals.
g. Exterior curtain-wall construction.
h. Equipment supports.
i. Piping, ductwork, vessels, and equipment.

B. Operational Limitations: Do not cut and patch operating elements or related components in a manner that would result in reducing their capacity to perform as intended. Do not cut and patch operating elements or related components in a manner that would result in increased maintenance or decreased operational life or safety.

1. Obtain approval of the cutting and patching proposal before cutting and patching the following operating elements or safety related systems:

a. Primary operational systems and equipment.
b. Air or smoke barriers.
c. Water, moisture, or vapor barriers.
d. Membranes and flashings.
e. Fire protection systems.
f. Control systems.
g. Communication systems.
h. Conveying systems.
i. Electrical wiring systems.
j. Operating systems of special construction in Division 13 Sections.

C. Visual Requirements: Do not cut and patch construction exposed on the exterior or in occupied spaces in a manner that would, in the Architect's opinion, reduce the building's aesthetic qualities. Do not cut and patch construction in a manner that would result in visual evidence of cutting and patching. Remove and replace construction cut and patched in a visually unsatisfactory manner.

1. If possible retain the original Installer or fabricator to cut and patch the exposed Work but not limited to the listed below. If it is impossible to engage the original Installer or fabricator, engage another recognized experienced and specialized firm.

a. Processed concrete finishes.
b. Stonework and stone masonry.
c. Preformed metal panels.
d. Firestopping.
e. Window wall system.
f. Acoustical ceilings.
g. Finished wood flooring.
h. Fluid-applied flooring.
i. Carpeting.
j. Wall covering.
k. HVAC enclosures, cabinets, or covers.

1.5 WARRANTY

A. Existing Warranties: Replace, patch, and repair material and surfaces cut or damaged by methods and with materials in such a manner as not to void any warranties required or existing.

PART 2 - PRODUCTS

2.1 MATERIALS, GENERAL

A. Use materials identical to existing materials. For exposed surfaces, use materials that visually match existing adjacent surfaces to the fullest extent possible if identical materials are unavailable or cannot be used. Use materials whose installed performance will equal or surpass that of existing materials.

PART 3 - EXECUTION

3.1 INSPECTION

A. Examine surfaces to be cut and patched and conditions under which cutting and patching is to be performed before cutting. If unsafe or unsatisfactory conditions are encountered, take corrective action before proceeding.

1. Before proceeding, meet at the Project Site with parties involved in cutting and patching, including mechanical and electrical trades. Review areas of potential interference and conflict. Coordinate procedures and resolve potential conflicts before proceeding.

3.2 PREPARATION

A. Temporary Support: Provide temporary support of work to be cut.

B. Protection: Protect existing construction during cutting and patching to prevent damage. Provide protection from adverse weather conditions for portions of the Project that might be exposed during cutting and patching operations.

C. Avoid interference with use of adjoining areas or interruption of free passage to adjoining areas.

D. Avoid cutting existing pipe, conduit, or ductwork serving the building but scheduled to be removed or relocated until provisions have been made to bypass them.

3.3 PERFORMANCE

A. General: Employ skilled workmen to perform cutting and patching. Proceed with cutting and patching at the earliest feasible time and complete without delay.

1. Cut existing construction to provide for installation of other components or performance of other construction activities and the subsequent fitting and patching required to restore surfaces to their original condition.

B. Cutting: Cut existing construction using methods least likely to damage elements retained or adjoining construction. Where possible, review proposed procedures with the original Installer; comply with the original Installer's recommendations.

1. In general, where cutting, use hand or small power tools designed for sawing or grinding, not hammering and chopping. Cut holes and slots as small as possible, neatly to size required, and with minimum disturbance of adjacent surfaces. Temporarily cover openings when not in use.

2. To avoid marring existing finished surfaces, cut or drill from the exposed or finished side into concealed surfaces.
3. Cut through concrete and masonry using a cutting machine, such as a Carborundum saw or a diamond-core drill.
4. Comply with requirements of applicable Division 2 Sections where cutting and patching requires excavating and backfilling.
5. Where services are required to be removed, relocated, or abandoned, by-pass utility services, such as pipe or conduit, before cutting. Cut-off pipe or conduit in walls or partitions to be removed. Cap, valve, or plug and seal the remaining portion of pipe or conduit to prevent entrance of moisture or other foreign matter after by-passing and cutting.

C. Patching: Patch with durable seams that are as invisible as possible. Comply with specified tolerances.

1. Where feasible, inspect and test patched areas to demonstrate integrity of the installation.
2. Restore exposed finishes of patched areas and extend finish restoration into retained adjoining construction in a manner that will eliminate evidence of patching and refinishing.
3. Where removing walls or partitions extends one finished area into another, patch and repair floor and wall surfaces in the new space. Provide an even surface of uniform color and appearance. Remove existing floor and wall coverings and replace with new materials, if necessary, to achieve uniform color and appearance.

    a. Where patching occurs in a smooth painted surface, extend final paint coat over entire unbroken surface containing the patch after the area has received primer and second coat.

4. Patch, repair, or rehang existing ceilings as necessary to provide an even-plane surface of uniform appearance.

3.4 CLEANING

A. Clean areas and spaces where cutting and patching are performed. Completely remove paint, mortar, oils, putty, and similar items. Thoroughly clean piping, conduit, and similar features before applying paint or other finishing materials. Restore damaged pipe covering to its original condition.

END OF SECTION 014500

SECTION 015000 - TEMPORARY FACILITIES AND CONTROLS

PART 1 - GENERAL

1.1 RELATED DOCUMENTS

A. Drawings and general provisions of the Contract, including General and Supplementary Conditions and other Division 01 Specification Sections, apply to this Section.

1.2 SUMMARY

A. This Section includes requirements for temporary utilities, support facilities, and security and protection facilities.

B. Related Sections include the following:

1. Division 01 Section "Summary" for limitations on utility interruptions and other work restrictions.
2. Division 01 Section "Submittal Procedures" for procedures for submitting copies of implementation and termination schedule and utility reports.
3. Division 01 Section "Execution" for progress cleaning requirements.

1.3 DEFINITIONS

A. Permanent Enclosure: As determined by Architect, permanent or temporary roofing is complete, insulated, and weathertight; exterior walls are insulated and weathertight; and all openings are closed with permanent construction or substantial temporary closures.

1.4 USE CHARGES

A. General: Contractor is responsible for all temporary services including hookup and billing. Temporary services will not be provided by Bergen County nor will operating costs be deducted from Contractor invoices. The Contractor is responsible for all temporary utility costs up to the date of Substantial Completion. Cost or use charges for temporary facilities shall be included in the Contract Sum. Allow other entities to use temporary services and facilities without cost, including, but not limited to, Owner's construction forces, Architect, testing agencies, and authorities having jurisdiction.

B. Sewer Service: Pay sewer service use charges for sewer usage by all entities for construction operations.

C. Water Service: Pay water service use charges for water used by all entities for construction operations.

D. Electric Power Service: Pay electric power service use charges for electricity used by all entities for construction operations.

1.5 SUBMITTALS

A. Site Plan: Show temporary facilities, utility hookups, staging areas, and parking areas for construction personnel.

1.6 QUALITY ASSURANCE

A. Electric Service: Comply with NECA, NEMA, and UL standards and regulations for temporary electric service. Install service to comply with NFPA 70.

B. Tests and Inspections: Arrange for authorities having jurisdiction to test and inspect each temporary utility before use. Obtain required certifications and permits.

1.7 PROJECT CONDITIONS

A. Temporary Use of Permanent Facilities: Installer of each permanent service shall assume responsibility for operation, maintenance, and protection of each permanent service during its use as a construction facility before Owner's acceptance, regardless of previously assigned responsibilities.

PART 2 - PRODUCTS

2.1 MATERIALS

A. Pavement: Comply with Division 32 pavement Sections.

B. Chain-Link Fencing: Minimum 2-inch (50-mm), 0.148-inch- (3.76-mm-) thick, galvanized steel, chain-link fabric fencing; minimum 6 feet (1.8 m) high with galvanized steel pipe posts; minimum 2-3/8-inch- (60-mm-) OD line posts and 2-7/8-inch- (73-mm-) OD corner and pull posts with 1-5/8-inch- (42-mm-) OD top rails.

C. Portable Chain-Link Fencing: Minimum 2-inch, 9-gage, galvanized steel, chain-link fabric fencing; minimum 6 feet high with galvanized steel pipe posts; minimum 2-3/8-inch OD line posts and 2-7/8-inch OD corner and pull posts, with 1-5/8-inch OD top and bottom rails. Provide galvanized steel bases for supporting posts.

D. Lumber and Plywood: Comply with requirements in Division 06 Section "Rough Carpentry"

E. Gypsum Board: Minimum 1/2 inch thick by 48 inches wide by maximum available lengths; regular-type panels with tapered edges. Comply with ASTM C 36/C 36M.

F. Insulation: Unfaced mineral-fiber blanket, manufactured from glass, slag wool, or rock wool; with maximum flame-spread and smoke-developed indexes of 25 and 50, respectively.

G. Paint: Comply with requirements in Division 09 painting Sections.

2.2 TEMPORARY FACILITIES

A. Field Offices, General: Prefabricated or mobile units with serviceable finishes, temperature controls, and foundations adequate for normal loading.

B. Contractor Field Office: Of sufficient size to accommodate needs of construction personnel. Keep office clean and orderly. Furnish and equip offices as follows:

1. Furniture required for Project-site documents including file cabinets, plan tables, plan racks, and bookcases.
2. Conference room of sufficient size to accommodate meetings of **12** individuals minimum. Provide electrical power service and 120-V ac duplex receptacles, with not less than 1 receptacle on each wall. Furnish room with conference table, chairs, and 4-foot- (1.2-m-) square tack board.
3. Drinking water and private toilet.
4. Coffee machine and supplies.
5. Heating and cooling equipment necessary to maintain a uniform indoor temperature of 68 to 72 deg F (20 to 22 deg C).
6. Lighting fixtures capable of maintaining average illumination of 20 fc (215 lx) at desk height.

C. Storage and Fabrication Sheds: Provide sheds sized, furnished, and equipped to accommodate materials and equipment for construction operations.

1. Store combustible materials apart from building.

2.3 EQUIPMENT

A. Fire Extinguishers: Portable, UL rated; with class and extinguishing agent as required by locations and classes of fire exposures.

B. HVAC Equipment: Permanent ductwork shall be installed and sealed off during construction. Use of permanent HVAC system during construction is prohibited; provide vented, self-contained, liquid-propane-gas or fuel-oil heaters with individual space thermostatic control.

1. Use of gasoline-burning space heaters, open-flame heaters, or salamander-type heating units is prohibited.
2. Heating Units: Listed and labeled for type of fuel being consumed, by a testing agency acceptable to authorities having jurisdiction, and marked for intended use.
3. Permanent HVAC System: If Owner authorizes use of permanent HVAC system for temporary use during construction, provide filter with MERV of 8 at each return air grille in system and remove at end of construction.

PART 3 - EXECUTION

3.1 INSTALLATION, GENERAL

A. Locate facilities where they will serve Project adequately and result in minimum interference with performance of the Work. Relocate and modify facilities as required by progress of the Work.

1. Locate facilities to limit site disturbance as specified in Division 01 Section "Summary."

B. Provide each facility ready for use when needed to avoid delay. Do not remove until facilities are no longer needed or are replaced by authorized use of completed permanent facilities.

3.2 TEMPORARY UTILITY INSTALLATION

A. Water Service: Use of Owner's existing water service facilities will be permitted, as long as facilities are cleaned and maintained in a condition acceptable to Owner. At Substantial Completion, restore these facilities to condition existing before initial use.

1. Where installations below an outlet might be damaged by spillage or leakage, provide a drip pan of suitable size to minimize water damage. Drain accumulated water promptly from pans.

B. Sanitary Facilities: Provide temporary toilets, wash facilities, and drinking water for use of construction personnel. Comply with authorities having jurisdiction for type, number, location, operation, and maintenance of fixtures and facilities.

1. Toilets: Use of Owner's existing toilet facilities will be **not** be permitted

C. Heating: Provide temporary heating required by construction activities for curing or drying of completed installations or for protecting installed construction from adverse effects of low temperatures or high humidity. Select equipment that will not have a harmful effect on completed installations or elements being installed.

D. Ventilation and Humidity Control: Provide temporary ventilation required by construction activities for curing or drying of completed installations or for protecting installed construction from adverse effects of high humidity. Select equipment that will not have a harmful effect on completed installations or elements being installed. Coordinate ventilation requirements to produce ambient condition required and minimize energy consumption.

E. Electric Power Service: Use of Owner's existing electric power service will be permitted, as long as equipment is maintained in a condition acceptable to Owner.

F. Lighting: Provide temporary lighting with local switching that provides adequate illumination for construction operations, observations, inspections, and traffic conditions.

1. Install and operate temporary lighting that fulfills security and protection requirements without operating entire system.

2. Install lighting for Project identification sign.

G. Telephone Service: Provide temporary telephone service in common-use facilities for use by all construction personnel.

1. At each telephone, post a list of important telephone numbers.

a. Police and fire departments.
b. Ambulance service.
c. Contractor's home office.
d. Architect's office.
e. Engineers' offices.
f. Owner's office.
g. Principal subcontractors' field and home offices.

2. Provide superintendent with cellular telephone for use.

H. Electronic Communication Service: Provide temporary electronic communication service, including electronic mail, in common-use facilities.

3.3 SUPPORT FACILITIES INSTALLATION

A. General: Comply with the following:

1. Maintain support facilities until near Substantial Completion. Remove before Substantial Completion. Personnel remaining after Substantial Completion will be permitted to use permanent facilities, under conditions acceptable to Owner.

B. Parking: Owner will designate Contractor parking areas/spaces.

C. Project Identification and Temporary Signs: Provide Project identification and other signs. Install signs where indicated to inform public and individuals seeking entrance to Project. Unauthorized signs are not permitted.

1. Provide temporary, directional signs for construction personnel and visitors.
2. Maintain and touchup signs so they are legible at all times.

D. Waste Disposal Facilities: Provide waste-collection containers in sizes adequate to handle waste from construction operations. Comply with requirements of authorities having jurisdiction. Comply with Division 01 Section "Execution" for progress cleaning requirements.

E. Lifts and Hoists: Provide facilities necessary for hoisting materials and personnel.

1. Truck cranes and similar devices used for hoisting materials are considered "tools and equipment" and not temporary facilities.

3.4 SECURITY AND PROTECTION FACILITIES INSTALLATION

A. Environmental Protection: Provide protection, operate temporary facilities, and conduct construction in ways and by methods that comply with environmental regulations and that minimize possible air, waterway, and subsoil contamination or pollution or other undesirable effects.

1. Comply with work restrictions specified in Division 01 Section "Summary."

B. Tree and Plant Protection: Comply with requirements specified in Division 01 Section "Temporary Tree and Plant Protection."

C. Pest Control: Engage pest-control service to recommend practices to minimize attraction and harboring of rodents, roaches, and other pests and to perform extermination and control procedures at regular intervals so Project will be free of pests and their residues at Substantial Completion. Obtain extended warranty for Owner. Perform control operations lawfully, using environmentally safe materials.

D. Site Enclosure Fence: Before construction operations begin, furnish and install site enclosure fence in a manner that will prevent people and animals from easily entering site except by entrance gates.

1. Extent of Fence: As required to enclose entire Project site or portion determined sufficient to accommodate construction operations.
2. Maintain security by limiting number of keys and restricting distribution to authorized personnel. Provide Owner with one set of keys.

E. Security Enclosure and Lockup: Install substantial temporary enclosure around partially completed areas of construction. Provide lockable entrances to prevent unauthorized entrance, vandalism, theft, and similar violations of security.

F. Barricades, Warning Signs, and Lights: Comply with requirements of authorities having jurisdiction for erecting structurally adequate barricades, including warning signs and lighting.

G. Temporary Enclosures: Provide temporary enclosures for protection of construction, in progress and completed, from exposure, foul weather, other construction operations, and similar activities. Provide temporary weathertight enclosure for building exterior.

1. Where heating or cooling is needed and permanent enclosure is not complete, insulate temporary enclosures.

H. Temporary Fire Protection: Install and maintain temporary fire-protection facilities of types needed to protect against reasonably predictable and controllable fire losses. Comply with NFPA 241.

1. Prohibit smoking in construction areas.
2. Supervise welding operations, combustion-type temporary heating units, and similar sources of fire ignition according to requirements of authorities having jurisdiction.
3. Develop and supervise an overall fire-prevention and -protection program for personnel at Project site. Review needs with local fire department and establish

procedures to be followed. Instruct personnel in methods and procedures. Post warnings and information.

4. Provide temporary standpipes and hoses for fire protection. Hang hoses with a warning sign stating that hoses are for fire-protection purposes only and are not to be removed. Match hose size with outlet size and equip with suitable nozzles.

3.5 OPERATION, TERMINATION, AND REMOVAL

A. Supervision: Enforce strict discipline in use of temporary facilities. To minimize waste and abuse, limit availability of temporary facilities to essential and intended uses.

B. Maintenance: Maintain facilities in good operating condition until removal.

1. Maintain operation of temporary enclosures, heating, cooling, humidity control, ventilation, and similar facilities on a 24-hour basis where required to achieve indicated results and to avoid possibility of damage.

C. Operate Project-identification-sign lighting daily from dusk until 12:00 midnight.

D. Temporary Facility Changeover: Do not change over from using temporary security and protection facilities to permanent facilities until Substantial Completion.

E. Termination and Removal: Remove each temporary facility when need for its service has ended, when it has been replaced by authorized use of a permanent facility, or no later than Substantial Completion. Complete or, if necessary, restore permanent construction that may have been delayed because of interference with temporary facility. Repair damaged Work, clean exposed surfaces, and replace construction that cannot be satisfactorily repaired.

1. Materials and facilities that constitute temporary facilities are property of Contractor. Owner reserves right to take possession of Project identification signs.
2. At Substantial Completion, clean and renovate permanent facilities used during construction period. Comply with final cleaning requirements specified in Division 01 Section "Closeout Procedures."

END OF SECTION 015000

SECTION 016000 - PRODUCT REQUIREMENTS

PART 1 - GENERAL

1.1 RELATED DOCUMENTS

A. Drawings and general provisions of the Contract, including General and Supplementary Conditions and other Division 01 Specification Sections, apply to this Section.

1.2 SUMMARY

A. This Section includes administrative and procedural requirements for selection of products for use in Project; product delivery, storage, and handling; manufacturers' standard warranties on products; special warranties; product substitutions; and comparable products.

B. Related Sections include the following:

1. Division 01 Section "Allowances" for products selected under an allowance.
2. Division 01 Section "Alternates" for products selected under an alternate.
3. Division 01 Section "References" for applicable industry standards for products specified.
4. Division 01 Section "Closeout Procedures" for submitting warranties for Contract closeout.
5. Divisions 02 through 49 Sections for specific requirements for warranties on products and installations specified to be warranted.

1.3 DEFINITIONS

A. Products: Items purchased for incorporating into the Work, whether purchased for Project or taken from previously purchased stock. The term "product" includes the terms "material," "equipment," "system," and terms of similar intent.

1. Named Products: Items identified by manufacturer's product name, including make or model number or other designation shown or listed in manufacturer's published product literature, that is current as of date of the Contract Documents.
2. New Products: Items that have not previously been incorporated into another project or facility, except that products consisting of recycled-content materials are allowed, unless explicitly stated otherwise. Products salvaged or recycled from other projects are not considered new products.
3. Comparable Product: Product that is demonstrated and approved through submittal process, or where indicated as a product substitution, to have the indicated qualities related to type, function, dimension, in-service performance, physical properties, appearance, and other characteristics that equal or exceed those of specified product.

B. Substitutions: Changes in products, materials, equipment, and methods of construction from those required by the Contract Documents and proposed by Contractor.

C. **Basis-of-Design Product Specification**: Where a specific manufacturer's product is named and accompanied by the words "basis of design," including make or model number or other designation, to establish the significant qualities related to type, function, dimension, in-service performance, physical properties, appearance, and other characteristics for purposes of evaluating comparable products of other named manufacturers.

1.4 SUBMITTALS

A. Product List: Submit a list, in tabular from, showing specified products. Include generic names of products required. Include manufacturer's name and proprietary product names for each product.

1. Coordinate product list with Contractor's Construction Schedule and the Submittals Schedule.
2. Form: Tabulate information for each product under the following column headings:

a. Specification Section number and title.
b. Generic name used in the Contract Documents.
c. Proprietary name, model number, and similar designations.
d. Manufacturer's name and address.
e. Supplier's name and address.
f. Installer's name and address.
g. Projected delivery date or time span of delivery period.
h. Identification of items that require early submittal approval for scheduled delivery date.

3. Initial Submittal: Within 5 days after the Award of the Contract, submit 3 copies of initial product list. Include a written explanation for omissions of data and for variations from Contract requirements.

a. At Contractor's option, initial submittal may be limited to product selections and designations that must be established early in Contract period.

4. Completed List: Within 10 days after date of commencement of the Work, submit 3 copies of completed product list. Include a written explanation for omissions of data and for variations from Contract requirements.

B. Substitution Requests: Submit three copies of each request for consideration. Identify product or fabrication or installation method to be replaced. Include Specification Section number and title and Drawing numbers and titles. Substitutions will not be considered before a contractor is selected.

1. Substitution Request Form:
2. Documentation: Show compliance with requirements for substitutions and the following, as applicable:

a. Statement indicating why specified material or product cannot be provided.
b. Coordination information, including a list of changes or modifications needed to other parts of the Work and to construction performed by Owner and separate contractors, that will be necessary to accommodate proposed substitution.
c. Detailed comparison of significant qualities of proposed substitution with those of the Work specified. Significant qualities may include attributes such as performance, weight, size, durability, visual effect, and specific features and requirements indicated.
d. Product Data, including drawings and descriptions of products and fabrication and installation procedures.
e. Samples, where applicable or requested.
f. List of similar installations for completed projects with project names and addresses and names and addresses of architects and owners.
g. Material test reports from a qualified testing agency indicating and interpreting test results for compliance with requirements indicated.
h. Research/evaluation reports evidencing compliance with building code in effect for Project, from a model code organization acceptable to authorities having jurisdiction.
i. Detailed comparison of Contractor's Construction Schedule using proposed substitution with products specified for the Work, including effect on the overall Contract Time. If specified product or method of construction cannot be provided within the Contract Time, include letter from manufacturer, on manufacturer's letterhead, stating lack of availability or delays in delivery.
j. Cost information, including a proposal of change, if any, in the Contract Sum.
k. Contractor's certification that proposed substitution complies with requirements in the Contract Documents and is appropriate for applications indicated.
l. Contractor's waiver of rights to additional payment or time that may subsequently become necessary because of failure of proposed substitution to produce indicated results.

3. Architect's Action: If necessary, Architect will request additional information or documentation for evaluation within 14 days of receipt of a request for substitution. Architect will notify Contractor of acceptance or rejection of proposed substitution within 21 days of receipt of request, or 7 days of receipt of additional information or documentation, whichever is later.

   a. Form of Acceptance: Change Order.
   b. Use product specified if Architect cannot make a decision on use of a proposed substitution within time allocated.

C. Comparable Product Requests: Submit three copies of each request for consideration. Identify product or fabrication or installation method to be replaced. Include Specification Section number and title and Drawing numbers and titles.

1. Architect's Action: If necessary, Architect will request additional information or documentation for evaluation within one week of receipt of a comparable product request. Architect will notify Contractor of approval or rejection of

proposed comparable product request within 15 days of receipt of request, or 7 days of receipt of additional information or documentation, whichever is later.

a. Form of Approval: As specified in Division 01 Section "Submittal Procedures."
b. Use product specified if Architect cannot make a decision on use of a comparable product request within time allocated.

D. Basis-of-Design Product Specification Submittal: Comply with requirements in Division 01 Section "Submittal Procedures." Show compliance with requirements.

1.5 QUALITY ASSURANCE

A. Compatibility of Options: If Contractor is given option of selecting between two or more products for use on Project, product selected shall be compatible with products previously selected, even if previously selected products were also options.

1. Each contractor is responsible for providing products and construction methods compatible with products and construction methods of other contractors.
2. If a dispute arises between contractors over concurrently selectable but incompatible products, Architect will determine which products shall be used.

1.6 PRODUCT DELIVERY, STORAGE, AND HANDLING

A. Deliver, store, and handle products using means and methods that will prevent damage, deterioration, and loss, including theft. Comply with manufacturer's written instructions.

B. Delivery and Handling:

1. Schedule delivery to minimize long-term storage at Project site and to prevent overcrowding of construction spaces.
2. Coordinate delivery with installation time to ensure minimum holding time for items that are flammable, hazardous, easily damaged, or sensitive to deterioration, theft, and other losses.
3. Deliver products to Project site in an undamaged condition in manufacturer's original sealed container or other packaging system, complete with labels and instructions for handling, storing, unpacking, protecting, and installing.
4. Inspect products on delivery to ensure compliance with the Contract Documents and to ensure that products are undamaged and properly protected.

C. Storage:

1. Store products to allow for inspection and measurement of quantity or counting of units.
2. Store materials in a manner that will not endanger Project structure.
3. Store products that are subject to damage by the elements, under cover in a weathertight enclosure above ground, with ventilation adequate to prevent condensation.
4. Store cementitious products and materials on elevated platforms.
5. Store foam plastic from exposure to sunlight, except to extent necessary for period of installation and concealment.

6. Comply with product manufacturer's written instructions for temperature, humidity, ventilation, and weather-protection requirements for storage.
7. Protect stored products from damage and liquids from freezing.
8. Provide a secure location and enclosure at Project site for storage of materials and equipment by Owner's construction forces. Coordinate location with Owner.

1.7 PRODUCT WARRANTIES

A. Warranties specified in other Sections shall be in addition to, and run concurrent with, other warranties required by the Contract Documents. Manufacturer's disclaimers and limitations on product warranties do not relieve Contractor of obligations under requirements of the Contract Documents.

1. Manufacturer's Warranty: Preprinted written warranty published by individual manufacturer for a particular product and specifically endorsed by manufacturer to Owner.
2. Special Warranty: Written warranty required by or incorporated into the Contract Documents, either to extend time limit provided by manufacturer's warranty or to provide more rights for Owner.

B. Special Warranties: Prepare a written document that contains appropriate terms and identification, ready for execution. Submit a draft for approval before final execution.

1. Manufacturer's Standard Form: Modified to include Project-specific information and properly executed.
2. Specified Form: When specified forms are included with the Specifications, prepare a written document using appropriate form properly executed.
3. Refer to Divisions 02 through 49 Sections for specific content requirements and particular requirements for submitting special warranties.

C. Submittal Time: Comply with requirements in Division 01 Section "Closeout Procedures."

PART 2 - PRODUCTS

2.1 PRODUCT SELECTION PROCEDURES

A. General Product Requirements: Provide products that comply with the Contract Documents, that are undamaged and, unless otherwise indicated, that are new at time of installation.

1. Provide products complete with accessories, trim, finish, fasteners, and other items needed for a complete installation and indicated use and effect.
2. Standard Products: If available, and unless custom products or nonstandard options are specified, provide standard products of types that have been produced and used successfully in similar situations on other projects.
3. Owner reserves the right to limit selection to products with warranties not in conflict with requirements of the Contract Documents.
4. Where products are accompanied by the term "as selected," Architect will make selection.

5. Where products are accompanied by the term "match sample," sample to be matched is Architect's.
6. Descriptive, performance, and reference standard requirements in the Specifications establish "salient characteristics" of products.
7. Or Equal: Where products are specified by name and accompanied by the term "or equal" or "or approved equal" or "or approved," comply with provisions in Part 2 "Comparable Products" Article to obtain approval for use of an unnamed product.

B. Product Selection Procedures:

1. Product: Where Specifications name a single product and manufacturer, provide the named product that complies with requirements.
2. Manufacturer/Source: Where Specifications name a single manufacturer or source, provide a product by the named manufacturer or source that complies with requirements.
3. Products: Where Specifications include a list of names of both products and manufacturers, provide one of the products listed that complies with requirements.
4. Manufacturers: Where Specifications include a list of manufacturers' names, provide a product by one of the manufacturers listed that complies with requirements.
5. Available Products: Where Specifications include a list of names of both products and manufacturers, provide one of the products listed, or an unnamed product, that complies with requirements. Comply with provisions in Part 2 "Comparable Products" Article for consideration of an unnamed product.
6. Available Manufacturers: Where Specifications include a list of manufacturers, provide a product by one of the manufacturers listed, or an unnamed manufacturer, that complies with requirements. Comply with provisions in Part 2 "Comparable Products" Article for consideration of an unnamed product.
7. Product Options: Where Specifications indicate that sizes, profiles, and dimensional requirements on Drawings are based on a specific product or system, provide the specified product or system. Comply with provisions in Part 2 "Product Substitutions" Article for consideration of an unnamed product or system.
8. Basis-of-Design Product: Where Specifications name a product and include a list of manufacturers, provide the specified product or a comparable product by one of the other named manufacturers. Drawings and Specifications indicate sizes, profiles, dimensions, and other characteristics that are based on the product named. Comply with provisions in Part 2 "Comparable Products" Article for consideration of an unnamed product by the other named manufacturers.
9. Visual Matching Specification: Where Specifications require matching an established Sample, select a product that complies with requirements and matches Architect's sample. Architect's decision will be final on whether a proposed product matches.

    a. If no product available within specified category matches and complies with other specified requirements, comply with provisions in Part 2 "Product Substitutions" Article for proposal of product.

10. Visual Selection Specification: Where Specifications include the phrase "as selected from manufacturer's colors, patterns, textures" or a similar phrase, select a product that complies with other specified requirements.

a. Standard Range: Where Specifications include the phrase "standard range of colors, patterns, textures" or similar phrase, Architect will select color, pattern, density, or texture from manufacturer's product line that does not include premium items.
b. Full Range: Where Specifications include the phrase "full range of colors, patterns, textures" or similar phrase, Architect will select color, pattern, density, or texture from manufacturer's product line that includes both standard and premium items.

2.2 PRODUCT SUBSTITUTIONS

A. Timing: Architect will consider requests for substitution if received within 60 days after the Notice to Proceed. Requests received after that time may be considered or rejected at discretion of Architect. Substitutions will not be considered prior to the Notice to Proceed.

B. Conditions: Architect will consider Contractor's request for substitution when the following conditions are satisfied. If the following conditions are not satisfied, Architect will return requests without action, except to record noncompliance with these requirements:

1. Requested substitution offers Owner a substantial advantage in cost, time, energy conservation, or other considerations, after deducting additional responsibilities Owner must assume. Owner's additional responsibilities may include compensation to Architect for redesign and evaluation services, increased cost of other construction by Owner, and similar considerations.
2. Requested substitution does not require extensive revisions to the Contract Documents.
3. Requested substitution is consistent with the Contract Documents and will produce indicated results.
4. Substitution request is fully documented and properly submitted.
5. Requested substitution will not adversely affect Contractor's Construction Schedule.
6. Requested substitution has received necessary approvals of authorities having jurisdiction.
7. Requested substitution is compatible with other portions of the Work.
8. Requested substitution has been coordinated with other portions of the Work.
9. Requested substitution provides specified warranty.
10. If requested substitution involves more than one contractor, requested substitution has been coordinated with other portions of the Work, is uniform and consistent, is compatible with other products, and is acceptable to all contractors involved.

2.3 COMPARABLE PRODUCTS

A. Conditions: Architect will consider Contractor's request for comparable product when the following conditions are satisfied. If the following conditions are not satisfied, Architect will return requests without action, except to record noncompliance with these requirements:

1. Evidence that the proposed product does not require extensive revisions to the Contract Documents, that it is consistent with the Contract Documents and will produce the indicated results, and that it is compatible with other portions of the Work.
2. Detailed comparison of significant qualities of proposed product with those named in the Specifications. Significant qualities include attributes such as performance, weight, size, durability, visual effect, and specific features and requirements indicated.
3. Evidence that proposed product provides specified warranty.
4. List of similar installations for completed projects with project names and addresses and names and addresses of architects and owners, if requested.
5. Samples, if requested.

PART 3 - EXECUTION (Not Used)

END OF SECTION 016000

SECTION 017300 - EXECUTION

PART 1 - GENERAL

1.1 RELATED DOCUMENTS

A. Drawings and general provisions of the Contract, including General and Supplementary Conditions and other Division 01 Specification Sections, apply to this Section.

1.2 SUMMARY

A. This Section includes general procedural requirements governing execution of the Work including, but not limited to, the following:

1. Construction layout.
2. Field engineering and surveying.
3. General installation of products.
4. Coordination of Owner-installed products.
5. Progress cleaning.
6. Starting and adjusting.
7. Protection of installed construction.
8. Correction of the Work.

B. Related Sections include the following:

1. Division 01 Section "Project Management and Coordination" for procedures for coordinating field engineering with other construction activities.
2. Division 01 Section "Submittal Procedures" for submitting surveys.
3. Division 01 Section "Closeout Procedures" for submitting final property survey with Project Record Documents, recording of Owner-accepted deviations from indicated lines and levels, and final cleaning.

1.3 SUBMITTALS

A. Qualification Data: For land surveyor.

B. Certificates: Submit certificate signed by land surveyor certifying that location and elevation of improvements comply with requirements.

C. Landfill Receipts: Submit copy of receipts issued by a landfill facility, licensed to accept hazardous materials, for hazardous waste disposal.

D. Certified Surveys: Submit two copies signed by land surveyor.

1.4 QUALITY ASSURANCE

A. Land Surveyor Qualifications: A professional land surveyor who is legally qualified to practice in jurisdiction where Project is located and who is experienced in providing land-surveying services of the kind indicated.

PART 2 - PRODUCTS (Not Used)

PART 3 - EXECUTION

3.1 EXAMINATION

A. Existing Conditions: The existence and location of site improvements, utilities, and other construction indicated as existing are not guaranteed. Before beginning work, investigate and verify the existence and location of mechanical and electrical systems and other construction affecting the Work.

1. Before construction, verify the location and points of connection of utility services.

B. Existing Utilities: The existence and location of underground and other utilities and construction indicated as existing are not guaranteed. Before beginning sitework, investigate and verify the existence and location of underground utilities and other construction affecting the Work.

1. Before construction, verify the location and invert elevation at points of connection of sanitary sewer, storm sewer, and water-service piping; and underground electrical services.
2. Furnish location data for work related to Project that must be performed by public utilities serving Project site.

C. Acceptance of Conditions: Examine substrates, areas, and conditions, with Installer or Applicator present where indicated, for compliance with requirements for installation tolerances and other conditions affecting performance. Record observations.

1. Written Report: Where a written report listing conditions detrimental to performance of the Work is required by other Sections, include the following:

a. Description of the Work.
b. List of detrimental conditions, including substrates.
c. List of unacceptable installation tolerances.
d. Recommended corrections.

2. Verify compatibility with and suitability of substrates, including compatibility with existing finishes or primers.
3. Examine roughing-in for mechanical and electrical systems to verify actual locations of connections before equipment and fixture installation.
4. Examine walls, floors, and roofs for suitable conditions where products and systems are to be installed.
5. Proceed with installation only after unsatisfactory conditions have been corrected. Proceeding with the Work indicates acceptance of surfaces and conditions.

3.2 PREPARATION

A. Existing Utility Information: Furnish information to local utility and Owner that is necessary to adjust, move, or relocate existing utility structures, utility poles, lines, services, or other utility appurtenances located in or affected by construction. Coordinate with authorities having jurisdiction.

B. Field Measurements: Take field measurements as required to fit the Work properly. Recheck measurements before installing each product. Where portions of the Work are indicated to fit to other construction, verify dimensions of other construction by field measurements before fabrication. Coordinate fabrication schedule with construction progress to avoid delaying the Work.

C. Space Requirements: Verify space requirements and dimensions of items shown diagrammatically on Drawings.

D. Review of Contract Documents and Field Conditions: Immediately on discovery of the need for clarification of the Contract Documents, submit a request for information to Architect. Include a detailed description of problem encountered, together with recommendations for changing the Contract Documents.

3.3 CONSTRUCTION LAYOUT

A. Verification: Before proceeding to lay out the Work, verify layout information shown on Drawings, in relation to the property survey and existing benchmarks. If discrepancies are discovered, notify Architect promptly.

B. General: Engage a land surveyor to lay out the Work using accepted surveying practices.

1. Establish benchmarks and control points to set lines and levels at each story of construction and elsewhere as needed to locate each element of Project.
2. Establish dimensions within tolerances indicated. Do not scale Drawings to obtain required dimensions.
3. Inform installers of lines and levels to which they must comply.
4. Check the location, level and plumb, of every major element as the Work progresses.
5. Notify Architect when deviations from required lines and levels exceed allowable tolerances.
6. Close site surveys with an error of closure equal to or less than the standard established by authorities having jurisdiction.

C. Site Improvements: Locate and lay out site improvements, including pavements, grading, fill and topsoil placement, utility slopes, and invert elevations.

D. Building Lines and Levels: Locate and lay out control lines and levels for structures, building foundations, column grids, and floor levels, including those required for mechanical and electrical work. Transfer survey markings and elevations for use with control lines and levels. Level foundations and piers from two or more locations.

E. Record Log: Maintain a log of layout control work. Record deviations from required lines and levels. Include beginning and ending dates and times of surveys, weather

conditions, name and duty of each survey party member, and types of instruments and tapes used. Make the log available for reference by Architect.

3.4 INSTALLATION

A. General: Locate the Work and components of the Work accurately, in correct alignment and elevation, as indicated.

1. Make vertical work plumb and make horizontal work level.
2. Where space is limited, install components to maximize space available for maintenance and ease of removal for replacement.
3. Conceal pipes, ducts, and wiring in finished areas, unless otherwise indicated.
4. Maintain minimum headroom clearance of 8 feet (2.4 m) in spaces without a suspended ceiling.

B. Comply with manufacturer's written instructions and recommendations for installing products in applications indicated.

C. Install products at the time and under conditions that will ensure the best possible results. Maintain conditions required for product performance until Substantial Completion.

D. Conduct construction operations so no part of the Work is subjected to damaging operations or loading in excess of that expected during normal conditions of occupancy.

E. Tools and Equipment: Do not use tools or equipment that produce harmful noise levels.

F. Templates: Obtain and distribute to the parties involved templates for work specified to be factory prepared and field installed. Check Shop Drawings of other work to confirm that adequate provisions are made for locating and installing products to comply with indicated requirements.

G. Anchors and Fasteners: Provide anchors and fasteners as required to anchor each component securely in place, accurately located and aligned with other portions of the Work.

1. Mounting Heights: Where mounting heights are not indicated, mount components at heights directed by Architect.
2. Allow for building movement, including thermal expansion and contraction.
3. Coordinate installation of anchorages. Furnish setting drawings, templates, and directions for installing anchorages, including sleeves, concrete inserts, anchor bolts, and items with integral anchors, that are to be embedded in concrete or masonry. Deliver such items to Project site in time for installation.

H. Joints: Make joints of uniform width. Where joint locations in exposed work are not indicated, arrange joints for the best visual effect. Fit exposed connections together to form hairline joints.

I. Hazardous Materials: Use products, cleaners, and installation materials that are not considered hazardous.

3.5 OWNER-INSTALLED PRODUCTS

A. Site Access: Provide access to Project site for Owner's construction forces.

B. Coordination: Coordinate construction and operations of the Work with work performed by Owner's construction forces.

1. Construction Schedule: Inform Owner of Contractor's preferred construction schedule for Owner's portion of the Work. Adjust construction schedule based on a mutually agreeable timetable. Notify Owner if changes to schedule are required due to differences in actual construction progress.
2. Preinstallation Conferences: Include Owner's construction forces at preinstallation conferences covering portions of the Work that are to receive Owner's work. Attend preinstallation conferences conducted by Owner's construction forces if portions of the Work depend on Owner's construction.

3.6 PROGRESS CLEANING

A. General: Clean Project site and work areas daily, including common areas. Coordinate progress cleaning for joint-use areas where more than one installer has worked. Enforce requirements strictly. Dispose of materials lawfully.

1. Comply with requirements in NFPA 241 for removal of combustible waste materials and debris.
2. Do not hold materials more than 7 days during normal weather or 3 days if the temperature is expected to rise above 80 deg F (27 deg C).
3. Containerize hazardous and unsanitary waste materials separately from other waste. Mark containers appropriately and dispose of legally, according to regulations.

B. Site: Maintain Project site free of waste materials and debris.

C. Work Areas: Clean areas where work is in progress to the level of cleanliness necessary for proper execution of the Work.

1. Remove liquid spills promptly.
2. Where dust would impair proper execution of the Work, broom-clean or vacuum the entire work area, as appropriate.

D. Installed Work: Keep installed work clean. Clean installed surfaces according to written instructions of manufacturer or fabricator of product installed, using only cleaning materials specifically recommended. If specific cleaning materials are not recommended, use cleaning materials that are not hazardous to health or property and that will not damage exposed surfaces.

E. Concealed Spaces: Remove debris from concealed spaces before enclosing the space.

F. Exposed Surfaces in Finished Areas: Clean exposed surfaces and protect as necessary to ensure freedom from damage and deterioration at time of Substantial Completion.

G. Waste Disposal: Burying or burning waste materials on-site will not be permitted. Washing waste materials down sewers or into waterways will not be permitted.

H. During handling and installation, clean and protect construction in progress and adjoining materials already in place. Apply protective covering where required to ensure protection from damage or deterioration at Substantial Completion.

I. Clean and provide maintenance on completed construction as frequently as necessary through the remainder of the construction period. Adjust and lubricate operable components to ensure operability without damaging effects.

J. Limiting Exposures: Supervise construction operations to assure that no part of the construction, completed or in progress, is subject to harmful, dangerous, damaging, or otherwise deleterious exposure during the construction period.

3.7 STARTING AND ADJUSTING

A. Start equipment and operating components to confirm proper operation. Remove malfunctioning units, replace with new units, and retest.

B. Adjust operating components for proper operation without binding. Adjust equipment for proper operation.

C. Test each piece of equipment to verify proper operation. Test and adjust controls and safeties. Replace damaged and malfunctioning controls and equipment.

D. Manufacturer's Field Service: If a factory-authorized service representative is required to inspect field-assembled components and equipment installation, comply with qualification requirements in Division 01 Section "Quality Requirements."

3.8 PROTECTION OF INSTALLED CONSTRUCTION

A. Provide final protection and maintain conditions that ensure installed Work is without damage or deterioration at time of Substantial Completion.

B. Comply with manufacturer's written instructions for temperature and relative humidity.

3.9 CORRECTION OF THE WORK

A. Repair or remove and replace defective construction. Restore damaged substrates and finishes. Comply with requirements in Division 01 Section "Cutting and Patching."

1. Repairing includes replacing defective parts, refinishing damaged surfaces, touching up with matching materials, and properly adjusting operating equipment.

B. Restore permanent facilities used during construction to their specified condition.

C. Remove and replace damaged surfaces that are exposed to view if surfaces cannot be repaired without visible evidence of repair.

D. Repair components that do not operate properly. Remove and replace operating components that cannot be repaired.

E. Remove and replace chipped, scratched, and broken glass or reflective surfaces.

END OF SECTION 017300

SECTION 017700 - CLOSEOUT PROCEDURES

PART 1 - GENERAL

1.1 RELATED DOCUMENTS

A. Drawings and general provisions of the Contract, including General and Supplementary Conditions and other Division 01 Specification Sections, apply to this Section.

1.2 SUMMARY

A. This Section includes administrative and procedural requirements for contract closeout, including, but not limited to, the following:

1. Inspection procedures. Contractor's Punch List of Uncompleted Items.
2. Warranties.
3. Maintenance Bond
4. Final cleaning.
5. **Time Limit for Closeout.**
6. **Ready for Close-out.**
7. **Project Closeout Checklist.**

B. Related Sections include the following:

1. Division 01 Section "Payment Procedures" for requirements for Applications for Payment for Substantial and Final Completion.
2. Division 01 Section "Operation and Maintenance Data" for operation and maintenance manual requirements.
3. Divisions 02 through 49 Sections for specific closeout and special cleaning requirements for the Work in those Sections.

1.3 SUBSTANTIAL COMPLETION

A. Preliminary Procedures: Before requesting inspection for determining date of Substantial Completion, complete the following. List items below that are incomplete in request.

1. Prepare a list of items to be completed and corrected (punch list), the value of items on the list, and reasons why the Work is not complete.
2. Advise Owner of pending insurance changeover requirements.
3. Submit specific warranties, workmanship bonds, maintenance service agreements, final certifications, and similar documents.
4. Obtain and submit releases permitting Owner unrestricted use of the Work and access to services and utilities. Include occupancy permits, operating certificates, and similar releases.
5. Prepare and submit Project Record Documents, operation and maintenance manuals, Final Completion construction photographs and photographic

negatives, damage or settlement surveys, property surveys, and similar final record information.

6. Deliver tools, spare parts, extra materials, and similar items to location designated by Owner. Label with manufacturer's name and model number where applicable.
7. Make final changeover of permanent locks and deliver keys to Owner. Advise Owner's personnel of changeover in security provisions.
8. Complete startup testing of systems.
9. Submit test/adjust/balance records.
10. Terminate and remove temporary facilities from Project site, along with mockups, construction tools, and similar elements.
11. Advise Owner of changeover in heat and other utilities.
12. Submit changeover information related to Owner's occupancy, use, operation, and maintenance.
13. Complete final cleaning requirements, including touchup painting.
14. Touch up and otherwise repair and restore marred exposed finishes to eliminate visual defects.

B. Inspection: Submit a written request for inspection for Substantial Completion. On receipt of request, Architect will either proceed with inspection or notify Contractor of unfulfilled requirements. Architect will prepare the Certificate of Substantial Completion after inspection or will notify Contractor of items, either on Contractor's list or additional items identified by Architect, that must be completed or corrected before certificate will be issued.

1. Reinspection: Request reinspection when the Work identified in previous inspections as incomplete is completed or corrected.
2. Results of completed inspection will form the basis of requirements for Final Completion.

1.4 FINAL COMPLETION

A. Preliminary Procedures: Before requesting final inspection for determining date of Final Completion, complete the following:

1. Submit a final Application for Payment according to Division 01 Section "Payment Procedures."
2. Submit certified copy of Architect's Substantial Completion inspection list of items to be completed or corrected (punch list), endorsed and dated by Architect. The certified copy of the list shall state that each item has been completed or otherwise resolved for acceptance.
3. Submit evidence of final, continuing insurance coverage complying with insurance requirements.
4. Submit pest-control final inspection report and warranty.
5. Instruct Owner's personnel in operation, adjustment, and maintenance of products, equipment, and systems. Submit demonstration and training videotapes.

B. Inspection: Submit a written request for final inspection for acceptance. On receipt of request, Architect will either proceed with inspection or notify Contractor of unfulfilled requirements. Architect will prepare a final Certificate for Payment after inspection or

will notify Contractor of construction that must be completed or corrected before certificate will be issued.

1. Reinspection: Request reinspection when the Work identified in previous inspections as incomplete is completed or corrected.

1.5 LIST OF INCOMPLETE ITEMS (PUNCH LIST)

A. Preparation: Submit three copies of list. Include name and identification of each space and area affected by construction operations for incomplete items and items needing correction including, if necessary, areas disturbed by Contractor that are outside the limits of construction.

1. Organize list of spaces in sequential order, starting with exterior areas first and proceeding from lowest floor to highest floor.
2. Organize items applying to each space by major element, including categories for ceiling, individual walls, floors, equipment, and building systems.
3. Include the following information at the top of each page:

a. Project name.
b. Date.
c. Name of Architect
d. Name of Contractor.
e. Page number.

1.6 WARRANTIES & BONDS

A. Submittal Time: Submit written warranties on request of Architect for designated portions of the Work where commencement of warranties other than date of Substantial Completion is indicated.

B. Partial Occupancy: Submit properly executed warranties within 15 days of completion of designated portions of the Work that are completed and occupied or used by Owner during construction period by separate agreement with Contractor.

C. Organize warranty documents into an orderly sequence based on the table of contents of the Project Manual.

1. Bind warranties and bonds in heavy-duty, 3-ring, vinyl-covered, loose-leaf binders, thickness as necessary to accommodate contents, and sized to receive 8-1/2-by-11-inch paper.
2. Provide heavy paper dividers with plastic-covered tabs for each separate warranty. Mark tab to identify the product or installation. Provide a typed description of the product or installation, including the name of the product and the name, address, and telephone number of Installer.
3. Identify each binder on the front and spine with the typed or printed title "WARRANTIES," Project name, and name of Contractor.

D. Provide additional copies of each warranty to include in operation and maintenance manuals.

E. Maintenance Bond – Provide in the amount of 10% of the Contract Amount for a Period of One Year

PART 2 - PRODUCTS

2.1 MATERIALS

A. Cleaning Agents: Use cleaning materials and agents recommended by manufacturer or fabricator of the surface to be cleaned. Do not use cleaning agents that are potentially hazardous to health or property or that might damage finished surfaces.

PART 3 - EXECUTION

3.1 FINAL CLEANING

A. General: Provide final cleaning. Conduct cleaning and waste-removal operations to comply with local laws and ordinances and Federal and local environmental and antipollution regulations.

B. Cleaning: Employ experienced workers or professional cleaners for final cleaning. Clean each surface or unit to condition expected in an average commercial building cleaning and maintenance program. Comply with manufacturer's written instructions.

1. Complete the following cleaning operations before requesting inspection for certification of Substantial Completion for entire Project or for a portion of Project:

a. Clean Project site, yard, and grounds, in areas disturbed by construction activities, including landscape development areas, of rubbish, waste material, litter, and other foreign substances.
b. Sweep paved areas broom clean. Remove petrochemical spills, stains, and other foreign deposits.
c. Rake grounds that are neither planted nor paved to a smooth, even-textured surface.
d. Remove tools, construction equipment, machinery, and surplus material from Project site.
e. Remove snow and ice to provide safe access to building.
f. Clean exposed exterior and interior hard-surfaced finishes to a dirt-free condition, free of stains, films, and similar foreign substances. Avoid disturbing natural weathering of exterior surfaces. Restore reflective surfaces to their original condition.
g. Remove debris and surface dust from limited access spaces, including roofs, plenums, shafts, trenches, equipment vaults, manholes, attics, and similar spaces.
h. Sweep concrete floors broom clean in unoccupied spaces.
i. Vacuum carpet and similar soft surfaces, removing debris and excess nap; shampoo if visible soil or stains remain.
j. Clean transparent materials, including mirrors and glass in doors and windows. Remove glazing compounds and other noticeable, vision-obscuring materials. Replace chipped or broken glass and other damaged

transparent materials. Polish mirrors and glass, taking care not to scratch surfaces.

k. Remove labels that are not permanent.

l. Touch up and otherwise repair and restore marred, exposed finishes and surfaces. Replace finishes and surfaces that cannot be satisfactorily repaired or restored or that already show evidence of repair or restoration.

1) Do not paint over "UL" and similar labels, including mechanical and electrical nameplates.

m. Wipe surfaces of mechanical and electrical equipment, elevator equipment, and similar equipment. Remove excess lubrication, paint and mortar droppings, and other foreign substances.

n. Replace parts subject to unusual operating conditions.

o. Clean plumbing fixtures to a sanitary condition, free of stains, including stains resulting from water exposure.

p. Replace disposable air filters and clean permanent air filters. Clean exposed surfaces of diffusers, registers, and grills.

q. Clean ducts, blowers, and coils if units were operated without filters during construction.

r. Clean light fixtures, lamps, globes, and reflectors to function with full efficiency. Replace burned-out bulbs, and those noticeably dimmed by hours of use, and defective and noisy starters in fluorescent and mercury vapor fixtures to comply with requirements for new fixtures.

s. Leave Project clean and ready for occupancy.

C. Pest Control: Engage an experienced, licensed exterminator to make a final inspection and rid Project of rodents, insects, and other pests. Prepare a report.

D. Comply with safety standards for cleaning. Do not burn waste materials. Do not bury debris or excess materials on Owner's property. Do not discharge volatile, harmful, or dangerous materials into drainage systems. Remove waste materials from Project site and dispose of lawfully.

PART 4 TIME LIMIT FOR CLOSE-OUT IS 30 DAYS AFTER SUBSTANTIAL COMPLETION, CONTRACTOR MUST SUBMIT ALL CLOSE-OUT DOCUMENTS BY CONTRACT OR WILL BE SUBJECT TO ALL ADDITIONAL FEES INCURRED BY ARCHITECT AND THEIR ENGINEERS TO OBTAIN THE DOCUMENTS NECESSARY TO CLOSE-OUT THE PROJECT. SUCH FEES WILL BE DEDUCTED FROM THE CONTRACT BALANCE AT PROJECT CLOSE-OUT. (See Project Closeout Checklist on page 7 of this section).

READY FOR CLOSEOUT

Contractor shall submit a copy of this document with the completed punchlist, signed and sealed by the Contractor's authorized representative and Notarized, to the Architect indicating that the Work has been completed as require in accordance with the Contract Documents and after which the contractor shall notify the Architect when re-inspection is requested.

The undersigned certified that all items of work noted herein and all other required scope of Work have been completed in accordance with Contract Documents and is further certifying that the project is ready for final inspection by the Architect. The undersigned acknowledges providing all required close-out documents, including, but not limited to, all affidavits, warranties

and a release of liens, to the Architect, within 30 days after issuance of Temporary Certificate of Occupancy/Approval.

Items not completed shall be summarized by the Contractor in letter form and attached herewith.

The undersigned hereby certifies that he/she shall pay the Owner for any and all expenses incurred by the Architect due to the Contractor's misrepresentation of completion of punch list items.

_____
Authorized Representative of the Contractor

_____
Title

_____
Signature Date

THE CONTRACTOR SHALL SEAL THIS PUNCHLIST AS NOTED BELOW:

_____ _____
Contractor's Corporate Seal Notary Seal

Prepared by: _____ Date: _____

PROJECT CLOSE OUT CHECK LIST

RFI No.	DESCRIPTION	DATE RECEIVED	REMARKS
1	Certificate of Insurance (ie: AIA doc. G705)		
2	Maintenance Bond 10% for a period of one year from date of Substantial Completion		
3	Contractor's Warranty Period of one year		
4	Product Warranties		
5	Certificate of Occupancy (GC)		
6	Maintenance Instructions / Owner's Manuals		
7	Maintenance Stock (Extra Materials)		
8	Keys		
9	Record Drawings "As Builts"		
10	Balancing Reports (Mechanical)		
11	Contractor's Affidavit of Payment of Debts and Claims (ie: AIA doc. G706)		
12	Contractor's Affidavit of Payment of release		
13	Consent of Surety to Final Payment (ie: AIA		
14	Punch List – ea. Line item initialed compl		
15	Final Application for Payment, AIA doc. G702/G703 w/ schedule of Values breakdown & payment voucher if		
16	Certified Payrolls if required		
17	Any other documentation required by specification or contract:		
	a.)		
	b.)		

END OF SECTION 017700

SECTION 017823 - OPERATION AND MAINTENANCE DATA

PART 1 - GENERAL

1.1 RELATED DOCUMENTS

A. Drawings and general provisions of the Contract, including General and Supplementary Conditions and other Division 01 Specification Sections, apply to this Section.

1.2 SUMMARY

A. This Section includes administrative and procedural requirements for preparing operation and maintenance manuals, including the following:

1. Operation and maintenance documentation directory.
2. Emergency manuals.
3. Operation manuals for systems, subsystems, and equipment.
4. Maintenance manuals for the care and maintenance of systems and equipment.

B. Related Sections include the following:

1. Division 01 Section "Submittal Procedures" for submitting copies of submittals for operation and maintenance manuals.
2. Division 01 Section "Closeout Procedures" for submitting operation and maintenance manuals.
3. Division 01 Section "Project Record Documents" for preparing Record Drawings for operation and maintenance manuals.
4. Divisions 02 through 49 Sections for specific operation and maintenance manual requirements for the Work in those Sections.

1.3 DEFINITIONS

A. System: An organized collection of parts, equipment, or subsystems united by regular interaction.

B. Subsystem: A portion of a system with characteristics similar to a system.

1.4 SUBMITTALS

A. Initial Submittal: Submit 2 draft copies of each manual at least 15 days before requesting inspection for Substantial Completion. Include a complete operation and maintenance directory. Architect will return one copy of draft and mark whether general scope and content of manual are acceptable.

B. Final Submittal: Submit one copy of each manual in final form at least 15 days before final inspection. Architect will return copy with comments within 15 days after final inspection.

1. Correct or modify each manual to comply with Architect's comments. Submit 3 copies of each corrected manual within 15 days of receipt of Architect's comments.

1.5 COORDINATION

A. Where operation and maintenance documentation includes information on installations by more than one factory-authorized service representative, assemble and coordinate information furnished by representatives and prepare manuals.

PART 2 - PRODUCTS

2.1 OPERATION AND MAINTENANCE DOCUMENTATION DIRECTORY

A. Organization: Include a section in the directory for each of the following:

1. List of documents.
2. List of systems.
3. List of equipment.
4. Table of contents.

B. List of Systems and Subsystems: List systems alphabetically. Include references to operation and maintenance manuals that contain information about each system.

C. List of Equipment: List equipment for each system, organized alphabetically by system. For pieces of equipment not part of system, list alphabetically in separate list.

D. Tables of Contents: Include a table of contents for each emergency, operation, and maintenance manual.

E. Identification: In the documentation directory and in each operation and maintenance manual, identify each system, subsystem, and piece of equipment with same designation used in the Contract Documents. If no designation exists, assign a designation according to ASHRAE Guideline 4, "Preparation of Operating and Maintenance Documentation for Building Systems."

2.2 MANUALS, GENERAL

A. Organization: Unless otherwise indicated, organize each manual into a separate section for each system and subsystem, and a separate section for each piece of equipment not part of a system. Each manual shall contain the following materials, in the order listed:

1. Title page.
2. Table of contents.

3. Manual contents.

B. Title Page: Enclose title page in transparent plastic sleeve. Include the following information:

1. Subject matter included in manual.
2. Name and address of Project.
3. Name and address of Owner.
4. Date of submittal.
5. Name, address, and telephone number of Contractor.
6. Name and address of Architect.
7. Cross-reference to related systems in other operation and maintenance manuals.

C. Table of Contents: List each product included in manual, identified by product name, indexed to the content of the volume, and cross-referenced to Specification Section number in Project Manual.

1. If operation or maintenance documentation requires more than one volume to accommodate data, include comprehensive table of contents for all volumes in each volume of the set.

D. Manual Contents: Organize into sets of manageable size. Arrange contents alphabetically by system, subsystem, and equipment. If possible, assemble instructions for subsystems, equipment, and components of one system into a single binder.

1. Binders: Heavy-duty, 3-ring, vinyl-covered, loose-leaf binders, in thickness necessary to accommodate contents, sized to hold 8-1/2-by-11-inch (215-by-280-mm) paper; with clear plastic sleeve on spine to hold label describing contents and with pockets inside covers to hold folded oversize sheets.

   a. If two or more binders are necessary to accommodate data of a system, organize data in each binder into groupings by subsystem and related components. Cross-reference other binders if necessary, to provide essential information for proper operation or maintenance of equipment or system.
   b. Identify each binder on front and spine, with printed title "OPERATION AND MAINTENANCE MANUAL," Project title or name, and subject matter of contents. Indicate volume number for multiple-volume sets.

2. Dividers: Heavy-paper dividers with plastic-covered tabs for each section. Mark each tab to indicate contents. Include typed list of products and major components of equipment included in the section on each divider, cross-referenced to Specification Section number and title of Project Manual.
3. Protective Plastic Sleeves: Transparent plastic sleeves designed to enclose diagnostic software diskettes for computerized electronic equipment.
4. Supplementary Text: Prepared on 8-1/2-by-11-inch (215-by-280-mm) white bond paper.
5. Drawings: Attach reinforced, punched binder tabs on drawings and bind with text.

   a. If oversize drawings are necessary, fold drawings to same size as text pages and use as foldouts.

b. If drawings are too large to be used as foldouts, fold and place drawings in labeled envelopes and bind envelopes in rear of manual. At appropriate locations in manual, insert typewritten pages indicating drawing titles, descriptions of contents, and drawing locations.

2.3 EMERGENCY MANUALS

A. Content: Organize manual into a separate section for each of the following:

1. Type of emergency.
2. Emergency instructions.
3. Emergency procedures.

B. Type of Emergency: Where applicable for each type of emergency indicated below, include instructions and procedures for each system, subsystem, piece of equipment, and component:

1. Fire.
2. Flood.
3. Gas leak.
4. Water leak.
5. Power failure.
6. Water outage.
7. System, subsystem, or equipment failure.
8. Chemical release or spill.

C. Emergency Instructions: Describe and explain warnings, trouble indications, error messages, and similar codes and signals. Include responsibilities of Owner's operating personnel for notification of Installer, supplier, and manufacturer to maintain warranties.

D. Emergency Procedures: Include the following, as applicable:

1. Instructions on stopping.
2. Shutdown instructions for each type of emergency.
3. Operating instructions for conditions outside normal operating limits.
4. Required sequences for electric or electronic systems.
5. Special operating instructions and procedures.

2.4 OPERATION MANUALS

A. Content: In addition to requirements in this Section, include operation data required in individual Specification Sections and the following information:

1. System, subsystem, and equipment descriptions.
2. Performance and design criteria if Contractor is delegated design responsibility.
3. Operating standards.
4. Operating procedures.
5. Operating logs.
6. Wiring diagrams.
7. Control diagrams.
8. Piped system diagrams.

9. Precautions against improper use.
10. License requirements including inspection and renewal dates.

B. Descriptions: Include the following:

1. Product name and model number.
2. Manufacturer's name.
3. Equipment identification with serial number of each component.
4. Equipment function.
5. Operating characteristics.
6. Limiting conditions.
7. Performance curves.
8. Engineering data and tests.
9. Complete nomenclature and number of replacement parts.

C. Operating Procedures: Include the following, as applicable:

1. Startup procedures.
2. Equipment or system break-in procedures.
3. Routine and normal operating instructions.
4. Regulation and control procedures.
5. Instructions on stopping.
6. Normal shutdown instructions.
7. Seasonal and weekend operating instructions.
8. Required sequences for electric or electronic systems.
9. Special operating instructions and procedures.

D. Systems and Equipment Controls: Describe the sequence of operation, and diagram controls as installed.

E. Piped Systems: Diagram piping as installed, and identify color-coding where required for identification.

2.5 PRODUCT MAINTENANCE MANUAL

A. Content: Organize manual into a separate section for each product, material, and finish. Include source information, product information, maintenance procedures, repair materials and sources, and warranties and bonds, as described below.

B. Source Information: List each product included in manual, identified by product name and arranged to match manual's table of contents. For each product, list name, address, and telephone number of Installer or supplier and maintenance service agent, and cross-reference Specification Section number and title in Project Manual.

C. Product Information: Include the following, as applicable:

1. Product name and model number.
2. Manufacturer's name.
3. Color, pattern, and texture.
4. Material and chemical composition.
5. Reordering information for specially manufactured products.

D. Maintenance Procedures: Include manufacturer's written recommendations and the following:

1. Inspection procedures.
2. Types of cleaning agents to be used and methods of cleaning.
3. List of cleaning agents and methods of cleaning detrimental to product.
4. Schedule for routine cleaning and maintenance.
5. Repair instructions.

E. Repair Materials and Sources: Include lists of materials and local sources of materials and related services.

F. Warranties and Bonds: Include copies of warranties and bonds and lists of circumstances and conditions that would affect validity of warranties or bonds.

1. Include procedures to follow and required notifications for warranty claims.

2.6 SYSTEMS AND EQUIPMENT MAINTENANCE MANUAL

A. Content: For each system, subsystem, and piece of equipment not part of a system, include source information, manufacturers' maintenance documentation, maintenance procedures, maintenance and service schedules, spare parts list and source information, maintenance service contracts, and warranty and bond information, as described below.

B. Source Information: List each system, subsystem, and piece of equipment included in manual, identified by product name and arranged to match manual's table of contents. For each product, list name, address, and telephone number of Installer or supplier and maintenance service agent, and cross-reference Specification Section number and title in Project Manual.

C. Manufacturers' Maintenance Documentation: Manufacturers' maintenance documentation including the following information for each component part or piece of equipment:

1. Standard printed maintenance instructions and bulletins.
2. Drawings, diagrams, and instructions required for maintenance, including disassembly and component removal, replacement, and assembly.
3. Identification and nomenclature of parts and components.
4. List of items recommended to be stocked as spare parts.

D. Maintenance Procedures: Include the following information and items that detail essential maintenance procedures:

1. Test and inspection instructions.
2. Troubleshooting guide.
3. Precautions against improper maintenance.
4. Disassembly; component removal, repair, and replacement; and reassembly instructions.
5. Aligning, adjusting, and checking instructions.
6. Demonstration and training videotape, if available.

E. Maintenance and Service Schedules: Include service and lubrication requirements, list of required lubricants for equipment, and separate schedules for preventive and routine maintenance and service with standard time allotment.

1. Scheduled Maintenance and Service: Tabulate actions for daily, weekly, monthly, quarterly, semiannual, and annual frequencies.
2. Maintenance and Service Record: Include manufacturers' forms for recording maintenance.

F. Spare Parts List and Source Information: Include lists of replacement and repair parts, with parts identified and cross-referenced to manufacturers' maintenance documentation and local sources of maintenance materials and related services.

G. Maintenance Service Contracts: Include copies of maintenance agreements with name and telephone number of service agent.

H. Warranties and Bonds: Include copies of warranties and bonds and lists of circumstances and conditions that would affect validity of warranties or bonds.

1. Include procedures to follow and required notifications for warranty claims.

PART 3 - EXECUTION

3.1 MANUAL PREPARATION

A. Operation and Maintenance Documentation Directory: Prepare a separate manual that provides an organized reference to emergency, operation, and maintenance manuals.

B. Emergency Manual: Assemble a complete set of emergency information indicating procedures for use by emergency personnel and by Owner's operating personnel for types of emergencies indicated.

C. Product Maintenance Manual: Assemble a complete set of maintenance data indicating care and maintenance of each product, material, and finish incorporated into the Work.

D. Operation and Maintenance Manuals: Assemble a complete set of operation and maintenance data indicating operation and maintenance of each system, subsystem, and piece of equipment not part of a system.

1. Engage a factory-authorized service representative to assemble and prepare information for each system, subsystem, and piece of equipment not part of a system.
2. Prepare a separate manual for each system and subsystem, in the form of an instructional manual for use by Owner's operating personnel.

E. Manufacturers' Data: Where manuals contain manufacturers' standard printed data, include only sheets pertinent to product or component installed. Mark each sheet to identify each product or component incorporated into the Work. If data include more than one item in a tabular format, identify each item using appropriate references from

the Contract Documents. Identify data applicable to the Work and delete references to information not applicable.

1. Prepare supplementary text if manufacturers' standard printed data are not available and where the information is necessary for proper operation and maintenance of equipment or systems.

F. Drawings: Prepare drawings supplementing manufacturers' printed data to illustrate the relationship of component parts of equipment and systems and to illustrate control sequence and flow diagrams. Coordinate these drawings with information contained in Record Drawings to ensure correct illustration of completed installation.

1. Do not use original Project Record Documents as part of operation and maintenance manuals.
2. Comply with requirements of newly prepared Record Drawings in Division 01 Section "Project Record Documents."

G. Comply with Division 01 Section "Closeout Procedures" for schedule for submitting operation and maintenance documentation.

END OF SECTION 017823

SECTION 017839 - PROJECT RECORD DOCUMENTS

PART 1 - GENERAL

1.1 SUMMARY

A. This Section includes administrative and procedural requirements for Project Record Documents, including the following:

1. Record Drawings.
2. Record Specifications.
3. Record Product Data.

B. See Division 01 Section "Operation and Maintenance Data" for operation and maintenance manual requirements.

C. See Divisions 02 through 49 Sections for specific requirements for Project Record Documents of the Work in those Sections.

1.2 SUBMITTALS

A. Record Drawings: Comply with the following:

1. Number of Copies: Submit 3 set(s) of marked-up Record Prints.
2. Number of Copies: Submit copies of Record Drawings as follows:

a. Initial Submittal: Submit 1 set of corrected Record prints and one set (of marked-up Record Prints. Architect will initial and date each print and mark whether general scope of changes, additional information recorded, and quality of drafting are acceptable. Architect will return prints for organizing into sets, printing, binding, and final submittal.
b. Final Submittal: Submit 3 set(s) of marked-up Record Prints, and the following:

1) Record Prints: 3 set(s).

B. Record Specifications: Submit 3 sets of Project's Specifications, including addenda and contract modifications.

C. Record Product Data: Submit 3 copies of each Product Data submittal.

PART 2 - PRODUCTS

2.1 RECORD DRAWINGS

A. Record Prints: Maintain one set of blue- or black-line white prints of the Contract Drawings and Shop Drawings.

1. Preparation: Mark Record Prints to show the actual installation where installation varies from that shown originally. Require individual or entity who obtained record data, whether individual or entity is Installer, subcontractor, or similar entity, to prepare the marked-up Record Prints.

a. Give particular attention to information on concealed elements that would be difficult to identify or measure and record later.
b. Record data as soon as possible after obtaining it. Record and check the markup before enclosing concealed installations.

2. Mark the Contract Drawings or Shop Drawings, whichever is most capable of showing actual physical conditions, completely and accurately. If Shop Drawings are marked, show cross-reference on the Contract Drawings.
3. Mark record sets with erasable, red-colored pencil. Use other colors to distinguish between changes for different categories of the Work at same location.
4. Note Construction Change Directive numbers, alternate numbers, Change Order numbers, and similar identification, where applicable.

B. Record Transparencies: Immediately before inspection for Certificate of Substantial Completion, review marked-up Record Prints with Architect. When authorized, prepare a full set of corrected transparencies of the Contract Drawings and Shop Drawings.

1. Incorporate changes and additional information previously marked on Record Prints. Erase, redraw, and add details and notations where applicable.
2. Refer instances of uncertainty to Architect for resolution.
3. Print the Contract Drawings and Shop Drawings for use as Record Transparencies.

C. Format: Identify and date each Record Drawing; include the designation "PROJECT RECORD DRAWING" in a prominent location.

1. Record Prints: Organize Record Prints and newly prepared Record Drawings into manageable sets. Bind each set with durable paper cover sheets. Include identification on cover sheets.
2. Record Transparencies: Organize into unbound sets matching Record Prints. Place transparencies in durable tube-type drawing containers with end caps. Mark end cap of each container with identification. If container does not include a complete set, identify Drawings included.
3. Record CAD Drawings: Organize CAD information into separate electronic files that correspond to each sheet of the Contract Drawings. Name each file with the sheet identification. Include identification in each CAD file.
4. Identification: As follows:

a. Project name.
b. Date.
c. Designation "PROJECT RECORD DRAWINGS."

d. Name of Architect.
e. Name of Contractor.

2.2 RECORD SPECIFICATIONS

A. Preparation: Mark Specifications to indicate the actual product installation where installation varies from that indicated in Specifications, addenda, and contract modifications.

1. Give particular attention to information on concealed products and installations that cannot be readily identified and recorded later.
2. Mark copy with the proprietary name and model number of products, materials, and equipment furnished, including substitutions and product options selected.
3. Record the name of manufacturer, supplier, Installer, and other information necessary to provide a record of selections made.
4. Note related Change Orders, Record Product Data and Record Drawings where applicable.

2.3 RECORD PRODUCT DATA

A. Preparation: Mark Product Data to indicate the actual product installation where installation varies substantially from that indicated in Product Data submittal.

1. Give particular attention to information on concealed products and installations that cannot be readily identified and recorded later.
2. Include significant changes in the product delivered to Project site and changes in manufacturer's written instructions for installation.
3. Note related Change Orders, Record Specifications, and Record Drawings where applicable.

2.4 MISCELLANEOUS RECORD SUBMITTALS

A. Assemble miscellaneous records required by other Specification Sections for miscellaneous record keeping and submittal in connection with actual performance of the Work. Bind or file miscellaneous records and identify each, ready for continued use and reference.

PART 3 - EXECUTION

3.1 RECORDING AND MAINTENANCE

A. Recording: Maintain one copy of each submittal during the construction period for Project Record Document purposes. Post changes and modifications to Project Record Documents as they occur; do not wait until the end of Project.

B. Maintenance of Record Documents and Samples: Store Record Documents and Samples in the field office apart from the Contract Documents used for construction. Do not use Project Record Documents for construction purposes. Maintain Record

Documents in good order and in a clean, dry, legible condition, protected from deterioration and loss. Provide access to Project Record Documents for Architect's reference during normal working hours.

END OF SECTION 017839

SECTION 017900 - DEMONSTRATION AND TRAINING

PART 1 - GENERAL

1.1 RELATED DOCUMENTS

A. Drawings and general provisions of the Contract, including General and Supplementary Conditions and other Division 01 Specification Sections, apply to this Section.

1.2 SUMMARY

A. This Section includes administrative and procedural requirements for instructing Owner's personnel, including the following:

1. Demonstration of operation of systems, subsystems, and equipment.
2. Training in operation and maintenance of systems, subsystems, and equipment.
3. Demonstration and training videotapes.

B. Related Sections include the following:

1. Division 01 Section "Allowances" for administrative and procedural requirements for demonstration and training allowances.
2. Division 01 Section "Project Management and Coordination" for requirements for pre-instruction conferences.
3. Divisions 02 through 49 Sections for specific requirements for demonstration and training for products in those Sections.

C. Allowances: Furnish demonstration and training instruction time under the Demonstration and Training Allowance as specified in Division 01 Section "Allowances."

D. Unit Price for Instruction Time: Length of instruction time will be measured by actual time spent performing demonstration and training in required location. No payment will be made for time spent assembling educational materials, setting up, or cleaning up.

1.3 SUBMITTALS

A. Instruction Program: Submit two copies of outline of instructional program for demonstration and training, including a schedule of proposed dates, times, length of instruction time, and instructors' names for each training module. Include learning objective and outline for each training module.

1. At completion of training, submit three complete training manuals for Owner's use.

B. Qualification Data: For instructor.

C. Attendance Record: For each training module, submit list of participants and length of instruction time.

D. Evaluations: For each participant and for each training module, submit results and documentation of performance-based test.

E. Demonstration and Training Videotapes: Submit two copies within seven days of end of each training module.

1. Identification: On each copy, provide an applied label with the following information:

a. Name of Project.
b. Name and address of photographer.
c. Name of Architect.
d. Name of Contractor.
e. Date videotape was recorded.
f. Description of vantage point, indicating location, direction (by compass point), and elevation or story of construction.

2. Transcript: Prepared on 8-1/2-by-11-inch paper, punched and bound in heavy-duty, 3-ring, vinyl-covered binders. Mark appropriate identification on front and spine of each binder. Include a cover sheet with same label information as the corresponding videotape. Include name of Project and date of videotape on each page.

1.4 QUALITY ASSURANCE

A. Facilitator Qualifications: A firm or individual experienced in training or educating maintenance personnel in a training program similar in content and extent to that indicated for this Project, and whose work has resulted in training or education with a record of successful learning performance.

B. Instructor Qualifications: A factory-authorized service representative, complying with requirements in Division 01 Section "Quality Requirements," experienced in operation and maintenance procedures and training.

C. Photographer Qualifications: A professional photographer who is experienced photographing construction projects.

D. Pre-instruction Conference: Conduct conference at Project site to comply with requirements in Division 01 Section "Project Management and Coordination." Review methods and procedures related to demonstration and training including, but not limited to, the following:

1. Inspect and discuss locations and other facilities required for instruction.
2. Review and finalize instruction schedule and verify availability of educational materials, instructors' personnel, audiovisual equipment, and facilities needed to avoid delays.
3. Review required content of instruction.
4. For instruction that must occur outside, review weather and forecasted weather conditions and procedures to follow if conditions are unfavorable.

1.5 COORDINATION

A. Coordinate instruction schedule with Owner's operations. Adjust schedule as required to minimize disrupting Owner's operations.

B. Coordinate instructors, including providing notification of dates, times, length of instruction time, and course content.

C. Coordinate content of training modules with content of approved emergency, operation, and maintenance manuals. Do not submit instruction program until operation and maintenance data has been reviewed and approved by Architect.

PART 2 - PRODUCTS

2.1 INSTRUCTION PROGRAM

A. Program Structure: Develop an instruction program that includes individual training modules for each system and equipment not part of a system, as required by individual Specification Sections, and as follows:
   1. Equipment
   2. Fire-protection systems, including fire alarm fire pumps and fire-extinguishing systems.
   3. Heat generation
   4. Refrigeration systems
   5. HVAC systems
   6. HVAC instrumentation and controls.
   7. Electrical service and distribution.
   8. Lighting equipment and controls.

B. Training Modules: Develop a learning objective and teaching outline for each module. Include a description of specific skills and knowledge that participant is expected to master. For each module, include instruction for the following:

   1. Basis of System Design, Operational Requirements, and Criteria: Include the following:

      a. System, subsystem, and equipment descriptions.
      b. Performance and design criteria if Contractor is delegated design responsibility.
      c. Operating standards.
      d. Regulatory requirements.
      e. Equipment function.
      f. Operating characteristics.
      g. Limiting conditions.
      h. Performance curves.

   2. Documentation: Review the following items in detail:

      a. Emergency manuals.
      b. Operations manuals.
      c. Maintenance manuals.

d. Project Record Documents.
e. Identification systems.
f. Warranties and bonds.
g. Maintenance service agreements and similar continuing commitments.

3. Emergencies: Include the following, as applicable:

a. Instructions on meaning of warnings, trouble indications, and error messages.
b. Instructions on stopping.
c. Shutdown instructions for each type of emergency.
d. Operating instructions for conditions outside of normal operating limits.
e. Sequences for electric or electronic systems.
f. Special operating instructions and procedures.

4. Operations: Include the following, as applicable:

a. Startup procedures.
b. Equipment or system break-in procedures.
c. Routine and normal operating instructions.
d. Regulation and control procedures.
e. Control sequences.
f. Safety procedures.
g. Instructions on stopping.
h. Normal shutdown instructions.
i. Operating procedures for emergencies.
j. Operating procedures for system, subsystem, or equipment failure.
k. Seasonal and weekend operating instructions.
l. Required sequences for electric or electronic systems.
m. Special operating instructions and procedures.

5. Adjustments: Include the following:

a. Alignments.
b. Checking adjustments.
c. Noise and vibration adjustments.
d. Economy and efficiency adjustments.

6. Troubleshooting: Include the following:

a. Diagnostic instructions.
b. Test and inspection procedures.

7. Maintenance: Include the following:

a. Inspection procedures.
b. Types of cleaning agents to be used and methods of cleaning.
c. List of cleaning agents and methods of cleaning detrimental to product.
d. Procedures for routine cleaning
e. Procedures for preventive maintenance.
f. Procedures for routine maintenance.
g. Instruction on use of special tools.

8. Repairs: Include the following:

   a. Diagnosis instructions.
   b. Repair instructions.
   c. Disassembly; component removal, repair, and replacement; and reassembly instructions.
   d. Instructions for identifying parts and components.
   e. Review of spare parts needed for operation and maintenance.

PART 3 - EXECUTION

3.1 PREPARATION

A. Assemble educational materials necessary for instruction, including documentation and training module. Assemble training modules into a combined training manual.

B. Set up instructional equipment at instruction location.

3.2 INSTRUCTION

A. Facilitator: Engage a qualified facilitator to prepare instruction program and training modules, to coordinate instructors, and to coordinate between Contractor and Owner for number of participants, instruction times, and location.

B. Engage qualified instructors to instruct Owner's personnel to adjust, operate, and maintain systems, subsystems, and equipment not part of a system.

   1. Architect will furnish an instructor to describe basis of system design, operational requirements, criteria, and regulatory requirements.
   2. Owner will furnish an instructor to describe Owner's operational philosophy.
   3. Owner will furnish Contractor with names and positions of participants.

C. Scheduling: Provide instruction at mutually agreed on times. For equipment that requires seasonal operation, provide similar instruction at start of each season.

   1. Schedule training with Owner, through Architect, with at least seven days' advance notice.

D. Evaluation: At conclusion of each training module, assess and document each participant's mastery of module by use of a demonstration performance-based test.

E. Cleanup: Collect used and leftover educational materials and remove from Project site. Remove instructional equipment. Restore systems and equipment to condition existing before initial training use.

END OF SECTION 017900

SECTION 018500 - WARRANTIES AND BONDS

PART 1 - GENERAL

1.1. RELATED DOCUMENTS

A. Provisions established within the General and Supplementary General Conditions of the Contract, Division 1 - General Requirements, and Drawings are collectively applicable to this Section.

1.2. SECTION INCLUDES

A. Preparation and submittal of warranties and bonds.

1.3. RELATED SECTIONS/DOCUMENTS

A. Section 01700 - Contract Close-Out.

B. Section 01820 - Operation and Maintenance Data.

C. Individual Specification Sections: Warranties and bonds required for specific Products or Work.

1.4. FORM OF SUBMITTALS

A. Bind in commercial quality 8-1/2" x 11" three-ringed binders, with hardback, cleanable plastic covers.

B. Label cover of each binder with typed or printed title WARRANTIES AND BONDS, with title of Project; name, address and telephone number of Design-Builder; name of responsible principal.

C. Table of Contents: Neatly typed, in the sequence of the Table of Contents of the Project Manual, with each item identified with the number and title of the Specification Section in which specified, and the name of Product or Work item.

D. Separate each warranty or bond with index tab sheets as necessary. List subcontractor, supplier, and manufacturer, with name, address, and telephone number of responsible principals.

1.5. PREPARATION OF SUBMITTALS

A. Obtain warranties and bonds, executed in duplicate by responsible subcontractors, suppliers, and manufacturers, within ten (10) days after completion of applicable item of Work. When preparing the submittals, leave blank the date of beginning of time of warranty until the Date of Substantial Completion can be determined and inserted therein.

B. All warranties on equipment shall be for the term, duration and value required in the Specifications or elsewhere in the Contract Documents, commencing from

the date of Substantial Completion.

1. In the case of items or systems that have been put into beneficial use by the Design- Builder during the project construction with the Authority's permission, the Design-

   Builder shall provide for any additional or extended warranties necessary to provide continuous warranty coverage for the equipment or systems from the date of actual beneficial use until the completion of the entire term and duration of warranty coverage required by the Specifications and Contract Documents, as if measured from the date of Substantial Completion, rather than measured from the date such equipment was actually placed into beneficial use and service.

2. The duration of any warranty coverage required by the Contract Documents for any material, system or equipment provided by the Design-Builder shall not be limited or diminished by any period of time during which the Design-Builder has put such materials, equipment or systems into service or beneficial use, prior to Substantial Completion. If the Design-Builder puts materials, equipment or systems into service or beneficial use prior to Substantial Completion, the Design-Builder shall secure, at its own cost and expense, extensions of the warranty period or additional warranties sufficient to provide the Authority and/or the Project School District with the warranty coverage specified in the Plans and Specifications, as measured from the date of Substantial Completion.

3. Additional and extended warranties: Refer to individual Sections of the Specifications for required additional and extended warranties on systems, equipment and components. Provide the minimum warranties specified in Table 01850.1, Additional and Extended Warranties.

C. Verify that documents are in proper form, contain full information, and are notarized.

D. Co-sign all submittals. Design-Builder is responsible for coordination and completion of all warranty work commencing during, or arising from conditions discovered during, the Design-Builder's warranty period.

E. Retain warranties and bonds until time specified for submittal.

F. In addition to paper copies, provide electronic scans of all executed warranties and bonds, with all dates, signatures and notarizations, in a format acceptable to the Authority.

1.6. TIME OF SUBMITTALS

A. For equipment or component parts of equipment put into service or beneficial use during construction with the Authority's permission, submit documents within ten days after acceptance.

B. Make other submittals within ten days after date of Substantial Completion, prior to final Application for Payment.

C. For items of Work when acceptance is delayed beyond Date of Substantial Completion, submit within ten days after acceptance, listing the date of acceptance as the beginning of the warranty period.

PART 2 – PRODUCTS: (Not applicable)

PART 3 – EXECUTION: (Not applicable)

END OF SECTION 01850

SECTION 020700 - SELECTIVE DEMOLITION

PART 1 - GENERAL

1.1 RELATED DOCUMENTS

A. Drawings and general provisions of the Contract, including General and Supplementary Conditions and Division 1 Specification Sections, apply to this Section.

1.2 SUMMARY

A. This Section includes the following:

1. Demolition and removal of selected elements as indicated on the entire set of drawings. Demolition items are not limited to the Demolition drawings.

B. Related Sections: The following Sections contain requirements that relate to this Section:

1. Division 1 Section "Summary of Work" for use of the building and phasing requirements.
2. Division 1 Section "Cutting and Patching" for cutting and patching procedures for selective demolition operations.
3. Division 1 Section "Contract Closeout" for record document requirements.

1.3 DEFINITIONS

A. Remove: Remove and legally dispose of items except those indicated to be reinstalled, salvaged, or to remain the Owner's property.

B. Existing to Remain: Protect construction indicated to remain against damage and soiling during selective demolition. When permitted by the Architect, items may be removed to a suitable, protected storage location during selective demolition and then cleaned and reinstalled in their original locations.

1.4 MATERIALS OWNERSHIP

A. Except for items or materials indicated to be reused, salvaged, reinstalled, or otherwise indicated to remain the Owner's property, demolished materials shall become the Contractor's property and shall be removed from the site with further disposition at the Contractor's option.

1.5 SUBMITTALS

A. General: Submit each item in this Article according to the Conditions of the Contract and Division 1 Specification Sections, for information only, unless otherwise indicated.

B. Proposed dust-control measures.

C. Proposed noise-control measures.

D. Schedule of selective demolition activities indicating the following:

1. Detailed sequence of selective demolition and removal work, with starting and ending dates for each activity.
2. Interruption of utility services.

3. Coordination for shutoff, capping, and continuation of utility services.
4. Detailed sequence of selective demolition and removal work.

E. Inventory of items to be removed and salvaged.

F. Inventory of items to be removed by Owner.

G. Photographs or videotape, sufficiently detailed, of existing conditions of adjoining construction and site improvements that might be misconstrued as damage caused by selective demolition operations.

H. Record drawings at Project closeout according to Division 1 Section "Contract Closeout."

1. Identify and accurately locate capped utilities and other subsurface structural, electrical, or mechanical conditions.

I. Landfill records indicating receipt and acceptance of hazardous wastes by a landfill facility licensed to accept hazardous wastes.

1.6 QUALITY ASSURANCE

A. Demolition Firm Qualifications: Engage an experienced firm that has successfully completed selective demolition Work similar to that indicated for this Project.

B. Regulatory Requirements: Comply with governing EPA notification regulations before starting selective demolition. Comply with hauling and disposal regulations of authorities having jurisdiction.

C. Pre-demolition Conference: Conduct conference at Project site to comply with preinstallation conference requirements of Division 1 Section "Project Meetings."

1.7 PROJECT CONDITIONS

A. Owner will occupy portions of the building immediately adjacent to selective demolition area. Conduct selective demolition so that Owner's operations will not be disrupted. Provide not less than 72 hours' notice to Owner of activities that will affect Owner's operations.

B. Owner assumes no responsibility for actual condition of buildings to be selectively demolished.

1. Conditions existing at time of inspection for bidding purpose will be maintained by Owner as far as practical.

C. Asbestos: It is not expected that asbestos will be encountered in the Work. If any materials suspected of containing asbestos are encountered, do not disturb the materials. Immediately notify the Architect and the Owner. Asbestos will not be removed by Owner before start of Work.

D. Storage or sale of removed items or materials on-site will not be permitted.

1.8 SCHEDULING

A. Arrange selective demolition schedule so as not to interfere with Owner's on-site operations.

1.9 WARRANTY

A. Existing Special Warranty: Remove, replace, patch, and repair materials and surfaces cut or damaged during selective demolition, by methods and with materials so as not to void existing warranties.

PART 2 - PRODUCTS (Not Applicable)

2.1 REPAIR MATERIALS

A. Use repair materials identical to existing materials.

1. Where identical materials are unavailable or cannot be used for exposed surfaces, use materials that visually match existing adjacent surfaces to the fullest extent possible.
2. Use materials whose installed performance equals or surpasses that of existing materials.

PART 3 - EXECUTION

3.1 EXAMINATION

A. Verify that utilities have been disconnected and capped.

B. Survey existing conditions and correlate with requirements indicated to determine extent of selective demolition required.

C. Inventory and record the condition of items to be removed and reinstalled and items to be removed and salvaged.

D. When unanticipated mechanical, electrical, or structural elements that conflict with the intended function or design are encountered, investigate and measure the nature and extent of the conflict. Promptly submit a written report to the Architect.

E. Survey the condition of the building to determine whether removing any element might result in structural deficiency or unplanned collapse of any portion of the structure or adjacent structures during selective demolition.

F. Perform surveys as the Work progresses to detect hazards resulting from selective demolition activities.

3.2 UTILITY SERVICES

A. Maintain existing utilities indicated to remain in service and protect them against damage during selective demolition operations.

1. Do not interrupt existing utilities serving occupied or operating facilities, except when authorized in writing by Owner and authorities having jurisdiction. Provide temporary services during interruptions to existing utilities, as acceptable to Owner and to governing authorities.

a. Provide not less than 72 hours' notice to Owner if shutdown of service is required during changeover.

B. Utility Requirements: Locate, identify, disconnect, and seal or cap off indicated utility services serving building to be selectively demolished.

1. Owner will arrange to shut off indicated utilities when requested by Contractor.
2. Arrange to shut off indicated utilities with utility companies.
3. Where utility services are required to be removed, relocated, or abandoned, provide bypass connections to maintain continuity of service to other parts of the building before proceeding with selective demolition.
4. Cut off pipe or conduit in walls or partitions to be removed. Cap, valve, or plug and seal the remaining portion of pipe or conduit after bypassing.

C. Utility Requirements: Refer to Division 15 and 16 Sections for shutting off, disconnecting, removing, and sealing or capping utility services. Do not start selective demolition work until utility disconnecting and sealing have been completed and verified in writing.

3.3 PREPARATION

A. Drain, purge, or otherwise remove, collect, and dispose of chemicals, gases, explosives, acids, flammables, or other dangerous materials before proceeding with selective demolition operations.

B. Conduct demolition operations and remove debris to ensure minimum interference with roads, streets, walks, and other adjacent occupied and used facilities.

1. Do not close or obstruct streets, walks, or other adjacent occupied or used facilities without permission from Owner and authorities having jurisdiction. Provide alternate routes around closed or obstructed traffic ways if required by governing regulations.

C. Conduct demolition operations to prevent injury to people and damage to adjacent buildings and facilities to remain. Ensure safe passage of people around selective demolition area.

1. Erect temporary protection, such as walks, fences, railings, canopies, and covered passageways, where required by authorities having jurisdiction.
2. Protect existing site improvements, appurtenances, and landscaping to remain.
3. Erect a plainly visible fence around drip line of individual trees or around perimeter drip line of groups of trees to remain.
4. Provide temporary weather protection, during interval between demolition and removal of existing construction, on exterior surfaces and new construction to ensure that no water leakage or damage occurs to structure or interior areas.
5. Protect walls, ceilings, floors, and other existing finish work that are to remain and are exposed during selective demolition operations.
6. Cover and protect furniture, furnishings, and equipment that have not been removed.

E. Provide and maintain interior and exterior shoring, bracing, or structural support to preserve stability and prevent movement, settlement, or collapse of building to be selectively demolished.

1. Strengthen or add new supports when required during progress of selective demolition.

3.4 POLLUTION CONTROLS

A. Use water mist, temporary enclosures, and other suitable methods to limit the spread of dust and dirt. Comply with governing environmental protection regulations.

1. Do not use water when it may damage existing construction or create hazardous or objectionable conditions, such as ice, flooding, and pollution.

B. Remove and transport debris in a manner that will prevent spillage on adjacent surfaces and areas.

1. Remove debris from elevated portions of building by chute, hoist, or other device that will convey debris to grade level.

C. Clean adjacent structures and improvements of dust, dirt, and debris caused by selective demolition operations. Return adjacent areas to condition existing before start of selective demolition.

3.5 SELECTIVE DEMOLITION

A. Demolish and remove existing construction only to the extent required by new construction and as indicated. Use methods required to complete Work within limitations of governing regulations and as follows:

1. Proceed with selective demolition systematically, from higher to lower level. Complete selective demolition work above each floor or tier before disturbing supporting members on lower levels.
2. Neatly cut openings and holes plumb, square, and true to dimensions required. Use cutting methods least likely to damage construction to remain or adjoining construction. To minimize disturbance of adjacent surfaces, use hand or small power tools designed for sawing or grinding, not hammering and chopping. Temporarily cover openings to remain.
3. Cut or drill from the exposed or finished side into concealed surfaces to avoid marring existing finished surfaces.
4. Do not use cutting torches until work area is cleared of flammable materials. At concealed spaces, such as duct and pipe interiors, verify condition and contents of hidden space before starting flame-cutting operations. Maintain portable fire-suppression devices during flame-cutting operations.
5. Maintain adequate ventilation when using cutting torches.
6. Remove decayed, vermin-infested, or otherwise dangerous or unsuitable materials and promptly dispose of off-site.
7. Remove structural framing members and lower to ground by method suitable to avoid free fall and to prevent ground impact or dust generation.
8. Locate selective demolition equipment throughout the structure and remove debris and materials so as not to impose excessive loads on supporting walls, floors, or framing.
9. Dispose of demolished items and materials promptly. On-site storage or sale of removed items is prohibited.
10. Return elements of construction and surfaces to remain to condition existing before start of selective demolition operations.

B. Demolish concrete and masonry in small sections. Cut concrete and masonry at junctures with construction to remain, using power-driven masonry saw or hand tools; do not use power-driven impact tools.

C. Break up and remove concrete slabs on grade, unless otherwise shown to remain.

D. Remove resilient floor coverings and adhesive according to recommendations of the Resilient Floor Covering Institute's (RFCI) "Recommended Work Practices for the Removal of Resilient Floor Coverings" and Addendum.

1. Remove residual adhesive and prepare substrate for new floor coverings by one of the methods recommended by RFCI.

E. Remove no more existing roofing than can be covered in one day by new roofing. See applicable Division 7 Section for new roofing requirements.

3.6 PATCHING AND REPAIRS

A. Promptly patch and repair holes and damaged surfaces caused to adjacent construction by selective demolition operations.

B. Patching is specified in Division 1 Section "Cutting and Patching."

C. Where repairs to existing surfaces are required, patch to produce surfaces suitable for new materials.

1. Completely fill holes and depressions in existing masonry walls to remain with an approved masonry patching material, applied according to manufacturer's printed recommendations.

D. Restore exposed finishes of patched areas and extend finish restoration into adjoining construction to remain in a manner that eliminates evidence of patching and refinishing.

E. Patch and repair floor and wall surfaces in the new space where demolished walls or partitions extend one finished area into another. Provide a flush and even surface of uniform color and appearance.

1. Closely match texture and finish of existing adjacent surface.
2. Patch with durable seams that are as invisible as possible. Comply with specified tolerances.
3. Where patching smooth painted surfaces, extend final paint coat over entire unbroken surface containing the patch after the surface has received primer and second coat.
4. Remove existing floor and wall coverings and replace with new materials, if necessary, to achieve uniform color and appearance.
5. Inspect and test patched areas to demonstrate integrity of the installation, where feasible.

F. Patch, repair, or rehang existing ceilings as necessary to provide an even-plane surface of uniform appearance.

3.7 DISPOSAL OF DEMOLISHED MATERIALS

A. General: Promptly dispose of demolished materials. Do not allow demolished materials to accumulate on-site.

B. Burning: Do not burn demolished materials.

C. Disposal: Transport demolished materials off Owner's property and legally dispose of them.

3.8 CLEANING

A. Sweep the building broom clean on completion of selective demolition operation.

B. Change filters on air-handling equipment on completion of selective demolition operations.

END OF SECTION 020700

SECTION 053100 - STEEL DECKING

PART 1 - GENERAL

1.1 SUMMARY

A. Extent of metal decking is indicated on drawings, including basic layout and type of deck units required.

1.2 SUBMITTALS

A. Product Data: Submit manufacturer's specifications and installation instructions for each type of decking and accessories. Include manufacturer's certification as may be required to show compliance with these specifications.

B. Shop Drawings: Submit detailed drawings showing layout and types of deck panels, anchorage details and conditions requiring closure panels, supplementary framing, sump pans, cant strips, cut openings, special jointing or other accessories.

C. Provide acoustical inserts for metal deck for installation by others.

1.3 QUALITY ASSURANCE

A. Code and Standards: Comply with provisions of the following codes and standards, except as otherwise indicated or specified:
   1. AISI "Specification for the Design of Cold-Formed Steel Structural Members".
   2. AWS D1.3 "Structural Welding Code - Sheet Steel".
   3. SDI "Design Manual for Floor Decks and Roof Decks"

B. Qualification of Field Welding: Qualify welding processes and welding operators in accordance with "Welder Qualification" procedures of AWS D1.1.

C. Welded decking in place is subject to inspection and testing. Expense of removing and replacing portions of decking for testing purposes will be borne by Owner if welds are found to be satisfactory. Remove work found to be defective and replace with new acceptable work.

PART 2 - PRODUCTS

2.1 MANUFACTURERS

A. Available Manufacturers: Subject to compliance with requirements, manufacturers offering products which may be incorporated in the work include, but are not limited to, the following or approved equal.

   1. Metal Roof Deck Units:
      a. Roof Deck, Inc.
      b. Canam-United Steel Deck
      c. New Millennium Building Systems
      d. Nucor-Vulcraft Group

e. Epic Metal Inc.

2.2 MATERIALS

A. Steel for Galvanized Metal Deck Units: ASTM A 653, Grade 33 or higher – Roof Decking; ASTM A 652, Grade 40 or higher – Floor Decking.

B. Steel for Painted Metal Deck Units: ASTM A 1008, Grade 33 or higher – Roof Decking; ASTM A 652, Grade 40 or higher – Floor Decking

C. Sheet Metal Accessories: ASTM A 526, commercial quality, galvanized.

D. Galvanizing: ASTM A 653, G60.

E. Galvanizing Repair Paint: High zinc-dust content paint for repair of damaged galvanized surfaces complying with Military Specifications MIL-P-21035 (Ships).

F. Flexible Closure Strips: Manufacturer's standard vulcanized, closed-cell, synthetic rubber.

2.3 FABRICATION

A. General: Form deck units in lengths to be continuous over three (3) or more spans, with flush, telescoped or nested 2" laps at ends and interlocking or nested side laps, unless otherwise indicated.

B. Roof Deck Units: Provide deck configurations complying with SDI "Roof Deck Specifications" of metal thickness, depth and width as shown.

C. Open-Beam Composite Units: Fabricate deck units with integral embossing or raised pattern to furnish mechanical bond with concrete slabs. Fabricate open-beam units with fluted section having interlocking side laps: of metal thickness, depth and width as shown.

D. Metal Closure Strips: Fabricate metal closure strips, for cell raceways and openings between decking and other construction, of not less than 0.045" min. (18 gage) sheet steel. Form to provide tight-fitting closures at open ends of cells or flutes and sides of decking.

E. Roof Sump Pans: Fabricate from single pieces of .071" min. (14 gage) galvanized sheet steel with level bottoms and sloping sides to direct water flow to drain, unless otherwise shown. Provide sump pans of adequate size to receive roof drains and with bearing flanges not less than 3" wide. Recess pans not less than 1-1/2" below roof deck surface, unless otherwise shown or required by deck configuration. Holes for drains will be cut in the field.

PART 3 - EXECUTION

3.1 INSTALLATION

A. General: Install deck units and accessories in accordance with manufacturer's recommendations and final shop drawings, and as specified herein.

B. Place deck units on supporting steel framework and adjust to final position with ends accurately aligned and bearing on supporting members before being permanently fastened. Do not stretch or contract side lap interlocks.

C. Place deck units in straight alignment for entire length of run of cells and with close alignment between cells at ends of abutting units.

D. Place deck units flat and square, secured to adjacent framing without warp or excessive deflection.

E. Coordinate and cooperate with structural steel erector in locating decking bundles to prevent overloading of structural members.

F. Fastening Deck Units:

   1. Fasten roof deck units to steel supporting members by not less than 5/8" diameter fusion welds or elongated welds of equal strength, spaced not more than 12" o.c. In addition, secure deck to each supporting member in ribs where side laps occur.

G. Comply with AWS requirements and procedures for manual shielded metal arc welding, appearance and quality of welds and methods used in correcting welding work.

H. Cutting and Fitting: Cut and neatly fit deck units and accessories around other work projecting through or adjacent to the decking, as shown.

I. Mechanically fasten side laps of adjacent deck units between supports, at intervals not exceeding 36" o.c. using self-tapping No. 10 or larger machine screws, unless a closer spacing or a larger screw is called for on the drawing.

J. Uplift Loading: Install and anchor roof deck units to resist gross uplift of 45 lbs. per sq. ft. at eave overhang, building corners and perimeter, and 30 lbs. per sq. ft. for other roof areas.

K. Reinforcement at Openings: Provide additional metal reinforcement and closure pieces as required for strength, continuity of decking and support of other work shown.

L. Joint Covers: Provide metal joint covers at abutting ends and changes in direction of floor deck units, except where taped joints are required.

M. Shear Connectors: Weld shear connectors to supports through decking units in accordance with manufacturer's instructions. Do not weld shear connectors through two layers (lapped ends) of decking units. Weld only on clean, dry deck surfaces.

N. Pour Stops: Weld continuous pour stops to supporting decking units or structural steel supports with a minimum 1" long weld at 12" on center. Install pour stop with a minimum of 2" bearing on supports.

   1. Provide pour stops at edge of all slabs, all openings and as indicated on drawings.

O. Edge Finish Strips: Provide metal finish strips at edges of roof decking, parallel to flutes. Weld into position to provide a complete deck installation.

P. Touch-Up Painting: After deck installation, wire brush, clean and paint scarred areas, welds and rust spots on top and bottom surfaces of decking units and supporting steel members.

   1. Touch-up galvanized surfaces with galvanizing repair paint applied in accordance with manufacturer's instructions.
   2. Touch-up painted surface with same type of shop paint used on adjacent surfaces.

Q. In areas where shop-painted surfaces are to be exposed, apply touch-up paint to blend into adjacent surfaces.

R. Touch-Up Painting: Cleaning and touch-up painting of field welds, abraded areas and rust spots, as required after erection and before proceeding with field painting, is included in Division 9 under Painting.

3.2 QUALITY CONTROL

A. The owner shall employ a testing laboratory satisfactory to the Architect to perform the following tests and to submit testing and inspection reports.

   1. Welding: Inspect welding to determine if welds are at proper locations, are proper size and material, and meet AWS standards.
   2. Side lap Connections: Inspect side lap connections to determine if the connections are in accordance with contract documents.
   3. Shear Connectors: All shear connectors shall be visually inspected and tapped with a hammer. All/ any studs which do not appear to have a sound weld or which produce a dull sound rather than a ringing sound when tapped shall be further tested as follows:

      a. The stud shall be struck with a hammer and bent approximately 15 degrees off perpendicular towards the nearest end of the beam. Studs meeting this test without coming loose shall remain on the beam. Studs failing this test shall be replaced.

END OF SECTION 053100

SECTION 055000 - METAL FABRICATIONS

PART 1 - GENERAL

1.1 RELATED DOCUMENTS

A. Drawings and general provisions of the Contract, including General and Supplementary Conditions and Division 01 Specification Sections, apply to this Section.

1.2 SUMMARY

A. Section Includes:

1. Steel framing and supports for overhead doors and grilles.
2. Steel framing and supports for countertops.
3. Steel tube reinforcement for low partitions.
4. Steel framing and supports for mechanical and electrical equipment.
5. Steel framing and supports for applications where framing and supports are not specified in other Sections.
6. Slotted channel framing.
7. Metal ladders.
8. Bearing and leveling plates for applications where they are not specified in other Sections.

B. Products furnished, but not installed, under this Section include the following:

1. Anchor bolts, steel pipe sleeves, slotted-channel inserts, and wedge-type inserts indicated to be cast into concrete or built into unit masonry.

C. Related Requirements:

1. Section 051200 "Structural Steel Framing" for steel framing, supports, elevator machine beams, hoist beams, divider beams, door frames, and other steel items attached to the structural-steel framing.

1.3 COORDINATION

A. Coordinate selection of shop primers with topcoats to be applied over them. Comply with paint and coating manufacturers' written instructions to ensure that shop primers and topcoats are compatible with one another.

B. Coordinate installation of metal fabrications that are anchored to or that receive other work. Furnish setting drawings, templates, and directions for installing anchorages, including sleeves, concrete inserts, anchor bolts, and items with integral anchors, that are to be embedded in concrete or masonry. Deliver such items to Project site in time for installation.

1.4 ACTION SUBMITTALS

A. Product Data: For the following:

1. Fasteners.
2. Shop primers.
3. Slotted channel framing.
4. Manufactured metal ladders.

B. Shop Drawings: Show fabrication and installation details. Include plans, elevations, sections, and details of metal fabrications and their connections. Show anchorage and accessory items. Provide Shop Drawings for the following:

1. Steel framing and supports for overhead doors and grilles.
2. Steel framing and supports for countertops.
3. Steel tube reinforcement for low partitions.
4. Steel framing and supports for mechanical and electrical equipment.
5. Steel framing and supports for applications where framing and supports are not specified in other Sections.
6. Metal ladders.

C. Delegated-Design Submittal: For ladders, including analysis data signed and sealed by the qualified professional engineer responsible for their preparation.

1.5 INFORMATIONAL SUBMITTALS

A. Qualification Data: For professional engineer's experience with providing delegated-design engineering services of the kind indicated, including documentation that engineer is licensed in the jurisdiction in which Project is located.

B. Welding certificates.

C. Research Reports: For post-installed anchors.

1.6 QUALITY ASSURANCE

A. Welding Qualifications: Qualify procedures and personnel in accordance with the following:

1. AWS D1.1/D1.1M, "Structural Welding Code - Steel."
2. AWS D1.2/D1.2M, "Structural Welding Code - Aluminum."
3. AWS D1.6/D1.6M, "Structural Welding Code - Stainless Steel."

1.7 FIELD CONDITIONS

A. Field Measurements: Verify actual locations of walls, floor slabs, decks, and other construction contiguous with metal fabrications by field measurements before fabrication.

PART 2 - PRODUCTS

2.1 PERFORMANCE REQUIREMENTS

A. Delegated Design: Engage a qualified professional engineer, as defined in Section 014000 "Quality Requirements," to design ladders.

B. Structural Performance of Aluminum Ladders: Ladders, including landings, shall withstand the effects of loads and stresses within limits and under conditions specified in ANSI A14.3.

C. Thermal Movements: Allow for thermal movements from ambient and surface temperature changes acting on exterior metal fabrications by preventing buckling, opening of joints, overstressing of components, failure of connections, and other detrimental effects.

1. Temperature Change: 120 deg F (67 deg C), ambient; 180 deg F (100 deg C), material surfaces.

2.2 METALS

A. Metal Surfaces, General: Provide materials with smooth, flat surfaces unless otherwise indicated. For metal fabrications exposed to view in the completed Work, provide materials without seam marks, roller marks, rolled trade names, or blemishes with G90 (Z275) galvanized coating.

B. Steel Plates, Shapes, and Bars: ASTM A36/A36M with G90 (Z275) coating.

C. Stainless Steel Sheet, Strip, and Plate: ASTM A240/A240M or ASTM A666, Type 316.

D. Stainless Steel Bars and Shapes: ASTM A276/A276M, Type 316.

E. Steel Tubing: ASTM A500/A500M, cold-formed steel tubing.

F. Steel Pipe: ASTM A53/A53M, Standard Weight (Schedule 40) unless otherwise indicated.

G. Slotted Channel Framing: Cold-formed metal box channels (struts) complying with MFMA-4.

1. Size of Channels: 1-5/8 by 1-5/8 inches (41 by 41 mm) or as indicated.
2. Material: Galvanized steel, ASTM A653/A653M, commercial steel, Type B or structural steel, Grade 33 (Grade 230), with G90 (Z275) coating; 0.108-inch (2.8-mm) nominal thickness.
3. Material: Cold-rolled steel, ASTM A1008/A1008M, commercial steel, Type B or structural steel, Grade 33 (Grade 230); 0.0966-inch (2.5-mm) minimum thickness; hot-dip galvanized after fabrication.

H. Cast Iron: Either gray iron, ASTM A48/A48M, or malleable iron, ASTM A47/A47M, unless otherwise indicated.

I. 5052 Aluminum Plate and Sheet: ASTM B209 (ASTM B209M), Alloy 6061-T6.

J. 5052 Aluminum Extrusions: ASTM B221 (ASTM B221M), Alloy 6063-T6.

K. 5052 Aluminum-Alloy Rolled Tread Plate: ASTM B632/B632M, Alloy 6061-T6.

L. 5052 Aluminum Castings: ASTM B26/B26M, Alloy 443.0-F.

2.3 FASTENERS

A. General: Unless otherwise indicated, provide Type 316 stainless steel fasteners for exterior use and zinc-plated fasteners with coating complying with ASTM B633 or ASTM F1941/F1941M, Class Fe/Zn 5. Select fasteners for type, grade, and class required.

1. Provide stainless steel fasteners for fastening aluminum and stainless steel.

B. Steel Bolts and Nuts: Regular hexagon-head bolts, ASTM A307, Grade A (ASTM F568M, Property Class 4.6); with hex nuts, ASTM A563 (ASTM A563M); and, where indicated, flat washers.

C. High-Strength Bolts, Nuts, and Washers: ASTM F3125/F3125M, Grade A325 (Grade A325M), Type 3, heavy-hex steel structural bolts; ASTM A563, Grade DH3, (ASTM A563M, Class 10S3) heavy-hex carbon-steel nuts; and where indicated, flat washers.

D. Stainless Steel Bolts and Nuts: Regular hexagon-head annealed stainless steel bolts, ASTM F593 (ASTM F738M); with hex nuts, ASTM F594 (ASTM F836M); and, where indicated, flat washers; Alloy Group 1 (A1).

E. Anchor Bolts: ASTM F1554, Grade 36, of dimensions indicated; with nuts, ASTM A563 (ASTM A563M); and, where indicated, flat washers.

1. Hot-dip galvanize or provide mechanically deposited, zinc coating where item being fastened is indicated to be galvanized.

F. Anchors, General: Capable of sustaining, without failure, a load equal to six times the load imposed when installed in unit masonry and four times the load imposed when installed in concrete, as determined by testing in accordance with ASTM E488/E488M, conducted by a qualified independent testing agency.

G. Post-Installed Anchors: Torque-controlled expansion anchors.

1. Material for Interior Locations: Carbon-steel components zinc plated to comply with ASTM B633 or ASTM F1941/F1941M, Class Fe/Zn 5, unless otherwise indicated.
2. Material for Exterior Locations and Where Stainless Steel Is Indicated: Alloy Group 1 (A1) stainless steel bolts, ASTM F593 (ASTM F738M), and nuts, ASTM F594 (ASTM F836M).

H. Slotted-Channel Inserts: Cold-formed, hot-dip galvanized-steel box channels (struts) complying with MFMA-4, 1-5/8 by 7/8 inches (41 by 22 mm) by length indicated with anchor straps or studs not less than 3 inches (75 mm) long at not more than 8 inches (200 mm) o.c. Provide with temporary filler and tee-head bolts, complete with washers and nuts, all zinc-plated to comply with ASTM B633, Class Fe/Zn 5, as needed for fastening to inserts.

2.4 MISCELLANEOUS MATERIALS

A. Shop Primers: Provide primers that comply with Section 099113 "Exterior Painting" & Section 099123 "Interior Painting."

B. Universal Shop Primer: Fast-curing, lead- and chromate-free, universal modified-alkyd primer complying with MPI#79 and compatible with topcoat.

   1. Use primer containing pigments that make it easily distinguishable from zinc-rich primer.

C. Epoxy Zinc-Rich Primer: Complying with MPI#20 and compatible with topcoat.

D. Shop Primer for Galvanized Steel: Primer formulated for exterior use over zinc-coated metal and compatible with finish paint systems indicated.

E. Galvanizing Repair Paint: High-zinc-dust-content paint complying with SSPC-Paint 20 and compatible with paints specified to be used over it.

F. Bituminous Paint: Cold-applied asphalt emulsion complying with ASTM D1187/D1187M.

G. Shrinkage-Resistant Grout: Factory-packaged, nonmetallic, nonstaining, noncorrosive, nongaseous grout complying with ASTM C1107/C1107M. Provide grout specifically recommended by manufacturer for interior and exterior applications.

H. Concrete: Comply with requirements in Section 033000 "Cast-in-Place Concrete" for normal-weight, air-entrained concrete with a minimum 28-day compressive strength of 3000 psi (20 MPa).

2.5 FABRICATION, GENERAL

A. Shop Assembly: Preassemble items in the shop to greatest extent possible. Disassemble units only as necessary for shipping and handling limitations. Use connections that maintain structural value of joined pieces. Clearly mark units for reassembly and coordinated installation.

B. Cut, drill, and punch metals cleanly and accurately. Remove burrs and ease edges to a radius of approximately 1/32 inch (1 mm) unless otherwise indicated. Remove sharp or rough areas on exposed surfaces.

C. Form bent-metal corners to smallest radius possible without causing grain separation or otherwise impairing work.

D. Form exposed work with accurate angles and surfaces and straight edges.

E. Weld corners and seams continuously to comply with the following:

   1. Use materials and methods that minimize distortion and develop strength and corrosion resistance of base metals.
   2. Obtain fusion without undercut or overlap.
   3. Remove welding flux immediately.

4. At exposed connections, finish exposed welds and surfaces smooth and blended so no roughness shows after finishing and contour of welded surface matches that of adjacent surface.

F. Form exposed connections with hairline joints, flush and smooth, using concealed fasteners or welds where possible. Where exposed fasteners are required, use Phillips flat-head (countersunk) fasteners unless otherwise indicated. Locate joints where least conspicuous.

G. Fabricate seams and other connections that are exposed to weather in a manner to exclude water. Provide weep holes where water may accumulate.

H. Cut, reinforce, drill, and tap metal fabrications as indicated to receive finish hardware, screws, and similar items.

I. Provide for anchorage of type indicated; coordinate with supporting structure. Space anchoring devices to secure metal fabrications rigidly in place and to support indicated loads.

J. Where units are indicated to be cast into concrete or built into masonry, equip with integrally welded steel strap anchors, 1/8 by 1-1/2 inches (3.2 by 38 mm), with a minimum 6-inch (150-mm) embedment and 2-inch (50-mm) hook, not less than 8 inches (200 mm) from ends and corners of units and 24 inches (600 mm) o.c., unless otherwise indicated.

2.6 MISCELLANEOUS FRAMING AND SUPPORTS

A. General: Provide steel framing and supports not specified in other Sections as needed to complete the Work.

B. Fabricate units from steel shapes, plates, and bars of welded construction unless otherwise indicated. Fabricate to sizes, shapes, and profiles indicated and as necessary to receive adjacent construction.

1. Fabricate units from slotted channel framing where indicated.
2. Furnish inserts for units installed after concrete is placed.

C. Fabricate supports for operable partitions from continuous steel beams of sizes indicated with attached bearing plates, anchors, and braces as indicated. Drill or punch bottom flanges of beams to receive partition track hanger rods; locate holes where indicated on operable partition Shop Drawings.

D. Galvanize miscellaneous framing and supports.

E. Prime miscellaneous framing and supports with zinc-rich primer where indicated.

2.7 METAL LADDERS

A. General:

1. Comply with ANSI A14.3, except for elevator pit ladders.

B. Aluminum Ladders:

1. Source Limitations: Obtain aluminum ladders from single source from single manufacturer.
2. Space siderails 18 inches (457 mm) apart unless otherwise indicated.
3. Siderails: Continuous extruded-aluminum channels or tubes, not less than 2-1/2 inches (64 mm) deep, 3/4 inch (19 mm) wide, and 1/8 inch (3.2 mm) thick.
4. Rungs: Extruded-aluminum tubes, not less than 3/4 inch (19 mm) deep and not less than 1/8 inch (3.2 mm) thick, with ribbed tread surfaces.
5. Fit rungs in centerline of siderails; fasten by welding or with stainless steel fasteners or brackets and aluminum rivets.
6. Provide platforms as indicated fabricated from pressure-locked aluminum bar grating or extruded-aluminum plank grating, supported by extruded-aluminum framing. Limit openings in gratings to no more than 3/4 inch (19 mm) in least dimension.
7. Support each ladder at top and bottom and not more than 60 inches (1500 mm) o.c. with welded or bolted aluminum brackets.

2.8 MISCELLANEOUS STEEL TRIM

A. Unless otherwise indicated, fabricate units from steel shapes, plates, and bars of profiles shown with continuously welded joints and smooth exposed edges. Miter corners and use concealed field splices where possible.

B. Provide cutouts, fittings, and anchorages as needed to coordinate assembly and installation with other work.

C. Galvanize and prime exterior miscellaneous steel trim.

D. Prime exterior miscellaneous steel trim with zinc-rich primer.

2.9 LOOSE BEARING AND LEVELING PLATES

A. Provide loose bearing and leveling plates for steel items bearing on masonry or concrete construction. Drill plates to receive anchor bolts and for grouting.

B. Galvanize bearing and leveling plates.

C. Prime plates with zinc-rich primer.

2.10 STEEL WELD PLATES AND ANGLES

A. Provide steel weld plates and angles not specified in other Sections, for items supported from concrete construction as needed to complete the Work. Provide each unit with no fewer than two integrally welded steel strap anchors for embedding in concrete.

2.11 GENERAL FINISH REQUIREMENTS

A. Finish metal fabrications after assembly.

B. Finish exposed surfaces to remove tool and die marks and stretch lines, and to blend into surrounding surface.

2.12 STEEL AND IRON FINISHES

A. Galvanizing: Hot-dip galvanize items as indicated to comply with ASTM A153/A153M for steel and iron hardware and with ASTM A123/A123M for other steel and iron products.

1. Do not quench or apply post galvanizing treatments that might interfere with paint adhesion.

B. Preparation for Shop Priming Galvanized Items: After galvanizing, thoroughly clean galvanized surfaces of grease, dirt, oil, flux, and other foreign matter, and treat with metallic phosphate process.

C. Shop prime iron and steel items not indicated to be galvanized unless they are to be embedded in concrete, sprayed-on fireproofing, or masonry, or unless otherwise indicated.

1. Shop prime with primers specified in Section 099113 "Exterior Painting" & primers specified in Section 099123 "Interior Painting" unless zinc-rich primer is indicated.

D. Preparation for Shop Priming: Prepare surfaces to comply with SSPC-SP 6/NACE No. 3, "Commercial Blast Cleaning."

1. Exterior Items: SSPC-SP 6/NACE No. 3, "Commercial Blast Cleaning."
2. Items Indicated to Receive Zinc-Rich Primer: SSPC-SP 6/NACE No. 3, "Commercial Blast Cleaning."
3. Items Indicated to Receive Primers Specified in Section 099600 "High-Performance Coatings": SSPC-SP 6/NACE No. 3, "Commercial Blast Cleaning."
4. Other Steel Items: SSPC-SP 3, "Power Tool Cleaning."
5. Galvanized-Steel Items: SSPC-SP 16, "Brush-off Blast Cleaning of Coated and Uncoated Galvanized Steel, Stainless Steels, and Non-Ferrous Metals."

E. Shop Priming: Apply shop primer to comply with SSPC-PA 1, "Paint Application Specification No. 1: Shop, Field, and Maintenance Painting of Steel," for shop painting.

2.13 ALUMINUM FINISHES

A. As-Fabricated Finish: AA-M12.

B. Clear Anodic Finish: AAMA 611, Class I, AA-M12C22A41.

PART 3 - EXECUTION

3.1 INSTALLATION, GENERAL

A. Cutting, Fitting, and Placement: Perform cutting, drilling, and fitting required for installing metal fabrications. Set metal fabrications accurately in location, alignment,

and elevation; with edges and surfaces level, plumb, true, and free of rack; and measured from established lines and levels.

B. Fit exposed connections accurately together to form hairline joints. Weld connections that are not to be left as exposed joints but cannot be shop welded because of shipping size limitations. Do not weld, cut, or abrade surfaces of exterior units that have been hot-dip galvanized after fabrication and are for bolted or screwed field connections.

C. Field Welding: Comply with the following requirements:

1. Use materials and methods that minimize distortion and develop strength and corrosion resistance of base metals.
2. Obtain fusion without undercut or overlap.
3. Remove welding flux immediately.
4. At exposed connections, finish exposed welds and surfaces smooth and blended so no roughness shows after finishing and contour of welded surface matches that of adjacent surface.

D. Fastening to In-Place Construction: Provide anchorage devices and fasteners where metal fabrications are required to be fastened to in-place construction. Provide threaded fasteners for use with concrete and masonry inserts, toggle bolts, through bolts, lag screws, wood screws, and other connectors.

E. Provide temporary bracing or anchors in formwork for items that are to be built into concrete, masonry, or similar construction.

F. Corrosion Protection: Coat concealed surfaces of aluminum that come into contact with grout, concrete, masonry, wood, or dissimilar metals with the following:

1. Cast Aluminum: Heavy coat of bituminous paint.
2. Extruded Aluminum: Two coats of clear lacquer.

3.2 INSTALLATION OF MISCELLANEOUS FRAMING AND SUPPORTS

A. General: Install framing and supports to comply with requirements of items being supported, including manufacturers' written instructions and requirements indicated on Shop Drawings.

B. Anchor supports for operable partitions, overhead doors and overhead grilles securely to, and rigidly brace from, building structure.

C. Anchor shelf angles securely to existing construction with expansion anchors.

D. Support steel girders on solid grouted masonry, concrete, or steel pipe columns. Secure girders with anchor bolts embedded in grouted masonry or concrete or with bolts through top plates of pipe columns.

1. Where grout space under bearing plates is indicated for girders supported on concrete or masonry, install as specified in "Installing Bearing and Leveling Plates" Article.

3.3 INSTALLATION OF BEARING AND LEVELING PLATES

A. Clean concrete and masonry bearing surfaces of bond-reducing materials, and roughen to improve bond to surfaces. Clean bottom surface of plates.

B. Set bearing and leveling plates on wedges, shims, or leveling nuts. After bearing members have been positioned and plumbed, tighten anchor bolts. Do not remove wedges or shims but, if protruding, cut off flush with edge of bearing plate before packing with shrinkage-resistant grout. Pack grout solidly between bearing surfaces and plates to ensure that no voids remain.

3.4 REPAIRS

A. Touchup Painting:

1. Immediately after erection, clean field welds, bolted connections, and abraded areas. Paint uncoated and abraded areas with same material as used for shop painting to comply with SSPC-PA 1 for touching up shop-painted surfaces.

a. Apply by brush or spray to provide a minimum 2.0-mil (0.05-mm) dry film thickness.

B. Galvanized Surfaces: Clean field welds, bolted connections, and abraded areas and repair galvanizing to comply with ASTM A780/A780M.

END OF SECTION 055000

SECTION 055213 - PIPE AND TUBE RAILINGS

PART 1 - GENERAL

1.1 SUMMARY

A. This Section includes the following:
   1. Steel pipe and tube railings.

B. See Division 05 Section "Metal Stairs" for steel tube railings associated with metal stairs.

C. See Division 05 Section "Decorative Metal Railings" for stainless steel tube railings

PERFORMANCE REQUIREMENTS

D. Structural Performance: Provide railings capable of withstanding the effects of gravity loads and the following loads and stresses within limits and under conditions indicated:

   1. Handrails:

      a. Uniform load of 50 lbf/ ft. applied in any direction.
      b. Concentrated load of 200 lbf applied in any direction.
      c. Uniform and concentrated loads need not be assumed to act concurrently.

   2. Top Rails of Guards:

      a. Uniform load of 50 lbf/ ft. applied in any direction.
      b. Concentrated load of 200 lbf applied in any direction.
      c. Uniform and concentrated loads need not be assumed to act concurrently.

   3. Infill of Guards:

      a. Concentrated load of 50 lbf applied horizontally on an area of 1 sq. ft.
      b. Uniform load of 25 lbf/sq. ft. applied horizontally.
      c. Infill load and other loads need not be assumed to act concurrently.

E. Control of Corrosion: Prevent galvanic action and other forms of corrosion by insulating metals and other materials from direct contact with incompatible materials.

1.2 SUBMITTALS

A. Product Data: For mechanically connected railings, grout, anchoring cement, and paint products.

B. Shop Drawings: Include plans, elevations, sections, details, and attachments to other work.

1. For installed products indicated to comply with design loads, include structural analysis data signed and sealed by the qualified professional engineer responsible for their preparation.

C. Samples: For each exposed finish required.

D. Product Test Reports: Based on evaluation of comprehensive tests performed by a qualified testing agency, according to ASTM E 894 and ASTM E 935.

PART 2 - PRODUCTS

2.1 MANUFACTURERS

A. Available Manufacturers: Subject to compliance with requirements, manufacturers offering products that may be incorporated into the Work include, but are not limited to, the following:

1. Steel Pipe and Tube Railings:

a. Custom made handrail system to match existing.

2.2 METALS

A. Brackets, Flanges, and Anchors: Cast or formed metal of same type of material and finish as supported rails, unless otherwise indicated.

B. Steel and Iron:
1. Tubing: ASTM A 500 (cold formed).
2. Pipe: ASTM A 53/A 53M, Type F or Type S, Grade A, Standard Weight (Schedule 40), unless another grade and weight are required by structural loads.
3. Plates, Shapes, and Bars: ASTM A 36/A 36M.
4. Castings: Either gray or malleable iron, unless otherwise indicated.

a. Gray Iron: ASTM A 48/A 48M, Class 30, unless another class is indicated or required by structural loads.
b. Malleable Iron: ASTM A 47/A 47M.

2.3 MISCELLANEOUS MATERIALS

A. Fasteners: Provide concealed fasteners, unless unavoidable or standard for railings indicated.
1. Steel Railings: Plated steel fasteners complying with ASTM B 633, Class Fe/Zn 25 for electrodeposited zinc coating.

B. Anchors: Provide cast-in-place chemical or torque-controlled expansion anchors, fabricated from corrosion-resistant materials with capability to sustain, without failure, a load equal to six times the load imposed when installed in unit masonry and equal to four times the load imposed when installed in concrete, as determined by testing per ASTM E 488.

C. Welding Rods and Bare Electrodes: Select according to AWS specifications for metal alloy welded.

D. Shop Primers: Provide primers that comply with Division 09 painting Sections.

E. Universal Shop Primer: Fast-curing, lead- and chromate-free, universal modified-alkyd primer complying with MPI#79.

F. Zinc-Rich Primer: Complying with SSPC-Paint 20 or SSPC-Paint 29 and compatible with topcoat.

G. Shop Primer for Galvanized Steel: Zinc-dust, zinc-oxide primer compatible with finish paint systems indicated, and complying with SSPC-Paint 5.

H. Grout and Anchoring Cement: Factory-packaged, non-shrink, nonmetallic grout complying with ASTM C 1107; or water-resistant, non-shrink anchoring cement; recommended by manufacturer for exterior use.

2.4 FABRICATION

A. General: Fabricate railings to comply with design, dimensions, and details indicated, but not less than that required to support structural loads.

B. Welded Connections: Cope components at connections to provide close fit, or use fittings designed for this purpose. Weld all around at connections, including at fittings.

C. Form changes in direction by bending.

D. Form curves by bending in jigs to produce uniform curvature; maintain cross section of member throughout bend without cracking or otherwise deforming exposed surfaces.

E. Close exposed ends of railing members with prefabricated end fittings.

F. Provide wall returns at ends of wall-mounted handrails, unless otherwise indicated.

G. Brackets, Flanges, Fittings, and Anchors: Provide wall brackets, flanges, miscellaneous fittings, and anchors to interconnect railing members to other work, unless otherwise indicated.

2.5 FINISHES

A. Steel and Iron:

1. Galvanized Railings: Hot-dip galvanize exterior railings, after fabrication, to comply with ASTM A 123/A 123M. Provide hot-dip galvanized fittings, brackets, fasteners, sleeves, and other ferrous components.
2. Shop-Primed Galvanized Railings: After galvanizing, clean railings, treat with metallic-phosphate process, and apply primer to comply with SSPC-PA 1.
3. Shop-Primed Steel Finish: Prepare to comply with SSPC-SP 6/NACE No. 3, "Commercial Blast Cleaning" and apply primer to comply with SSPC-PA 1.

PART 3 - EXECUTION

3.1 INSTALLATION

A. General: Perform cutting, drilling, and fitting required for installing railings. Set railings accurately in location, alignment, and elevation.

1. Set posts plumb within a tolerance of 1/16 inch in 3 feet.
2. Align rails so variations from level for horizontal members and variations from parallel with rake of steps and ramps for sloping members do not exceed 1/4 inch in 12 feet.

B. Anchor posts in concrete by inserting into formed or core-drilled holes and grouting annular space.

C. Attach handrails to wall with wall brackets.

1. Locate brackets as indicated or, if not indicated, at spacing required to support structural loads.
2. Secure brackets to building construction as follows:

a. For concrete and solid masonry anchorage, use drilled-in expansion shields and hanger or lag bolts.
b. For hollow masonry anchorage, use toggle bolts.
c. For steel-framed structure weld or bolt.

D. Adjusting and Cleaning:

1. Immediately after erection, clean field welds, bolted connections, and abraded areas of shop paint, and paint exposed areas with the same material as used for shop painting.
2. Galvanized Surfaces: Clean field welds, bolted connections, and abraded areas and repair galvanizing to comply with ASTM A 780.

END OF SECTION 055213

SECTION 061000 - ROUGH CARPENTRY

PART 1 - GENERAL

1.1 RELATED DOCUMENTS

A. Drawings and general provisions of the Contract, including General and Supplementary Conditions and Division 01 Specification Sections, apply to this Section.

1.2 SUMMARY

A. This Section includes the following:
   1. Wood blocking, cants and nailers.
   2. Plywood backing panels.

1.3 DEFINITIONS

A. Dimension Lumber: Lumber of 2 inches nominal or greater but less than 5 inches nominal in least dimension.

B. Lumber grading agencies, and the abbreviations used to reference them, include the following:

   1. NeLMA: Northeastern Lumber Manufacturers' Association.
   2. WWPA: Western Wood Products Association.

1.4 SUBMITTALS

A. Product Data: For each type of process and factory-fabricated product. Indicate component materials and dimensions and include construction and application details.

   1. Include data for wood-preservative treatment from chemical treatment manufacturer and certification by treating plant that treated materials comply with requirements. Indicate type of preservative used and net amount of preservative retained.
   2. Include data for fire-retardant treatment from chemical treatment manufacturer and certification by treating plant that treated materials comply with requirements. Include physical properties of treated materials based on testing by a qualified independent testing agency.
   3. Include copies of warranties from chemical treatment manufacturers for each type of treatment.

B. Fastener Patterns: Full-size templates for fasteners in exposed framing.

1.5 QUALITY ASSURANCE

A. Source Limitations for Engineered Wood Products: Obtain each type of engineered wood product through one source from a single manufacturer.
   1. Miscellaneous lumber.

1.6 DELIVERY, STORAGE, AND HANDLING

A. Stack lumber flat with spacers between each bundle to provide air circulation. Provide for air circulation around stacks and under coverings.

PART 2 - PRODUCTS

2.1 WOOD PRODUCTS, GENERAL

A. Lumber: DOC PS 20 and applicable rules of grading agencies indicated. If no grading agency is indicated, provide lumber that complies with the applicable rules of any rules-writing agency certified by the ALSC Board of Review. Provide lumber graded by an agency certified by the ALSC Board of Review to inspect and grade lumber under the rules indicated.

   1. Factory mark each piece of lumber with grade stamp of grading agency.
   2. Where nominal sizes are indicated, provide actual sizes required by DOC PS 20 for moisture content specified. Where actual sizes are indicated, they are minimum dressed sizes for dry lumber.
   3. Provide dressed lumber, S4S, unless otherwise indicated.

2.2 WOOD-PRESERVATIVE-TREATED LUMBER

A. Preservative Treatment by Pressure Process: AWPA C2, except that lumber that is not in contact with the ground and is continuously protected from liquid water may be treated according to AWPA C31 with inorganic boron (SBX).

   1. Preservative Chemicals: Acceptable to authorities having jurisdiction and containing no arsenic or chromium.

B. Kiln-dry lumber after treatment to a maximum moisture content of 19 percent. Do not use material that is warped or does not comply with requirements for untreated material.

C. Mark lumber with treatment quality mark of an inspection agency approved by the ALSC Board of Review.

   1. For exposed lumber indicated to receive a stained or natural finish, mark end or back of each piece or omit marking and provide certificates of treatment compliance issued by inspection agency.

D. Application: Treat items indicated on Drawings, and the following:

1. Wood cants, nailers, curbs, equipment support bases, blocking, stripping, and similar members in connection with roofing, flashing, vapor barriers, and waterproofing.
2. Wood sills, sleepers, blocking, furring, stripping, and similar concealed members in contact with masonry or concrete.
3. Wood framing and furring attached directly to the interior of below-grade exterior masonry or concrete walls.

2.3 FIRE-RETARDANT-TREATED MATERIALS

A. General: Comply with performance requirements in AWPA C20 (lumber) and AWPA C27 (plywood).

1. Use Exterior type for exterior locations and where indicated.
2. Use Interior Type A, High Temperature (HT) for enclosed roof framing, framing in attic spaces, and where indicated.
3. Use Interior Type A, unless otherwise indicated.

B. Identify fire-retardant-treated wood with appropriate classification marking of testing and inspecting agency acceptable to authorities having jurisdiction.

C. Application: Treat items indicated on Drawings, and the following:
1. Concealed blocking.
2. Plywood backing panels.

2.4 MISCELLANEOUS LUMBER

A. General: Provide miscellaneous lumber indicated and lumber for support or attachment of other construction, including the following:

1. Blocking.
2. Nailers.
3. Rooftop equipment bases and support curbs.
4. Cants.
5. Furring.
6. Grounds.
7. Utility shelving.

B. For items of dimension lumber size, provide Construction or No. 2 grade lumber with 15 percent maximum moisture content of any species.

C. For items of dimension lumber size, provide Construction or No. 2 grade lumber with 15 percent maximum moisture content and any of the following species:

1. Hem-fir (north); NLGA.
2. Mixed southern pine; SPIB.
3. Spruce-pine-fir; NLGA.
4. Hem-fir; WCLIB, or WWPA.
5. Spruce-pine-fir (south); NeLMA, WCLIB, or WWPA.
6. Western woods; WCLIB or WWPA.
7. Northern species; NLGA.

8. Eastern softwoods; NeLMA.

D. For concealed boards, provide lumber with 15 percent maximum moisture content and any of the following species and grades:

1. Mixed southern pine, No. 2 grade; SPIB.
2. Hem-fir or hem-fir (north), Construction or 2 Common grade; NLGA, WCLIB, or WWPA.
3. Spruce-pine-fir (south) or spruce-pine-fir, Construction or 2 Common grade; NeLMA, NLGA, WCLIB, or WWPA.
4. Eastern softwoods, No. 2 Common grade; NeLMA.
5. Northern species, No. 2 Common grade; NLGA.
6. Western woods, Construction or No. 2 Common grade; WCLIB or WWPA.

E. For blocking not used for attachment of other construction, Utility, Stud, or No. 3 grade lumber of any species may be used provided that it is cut and selected to eliminate defects that will interfere with its attachment and purpose.

F. For blocking and nailers used for attachment of other construction, select and cut lumber to eliminate knots and other defects that will interfere with attachment of other work.

G. For furring strips for installing plywood or hardboard paneling, select boards with no knots capable of producing bent-over nails and damage to paneling.

2.5 PLYWOOD BACKING PANELS

A. Telephone and Electrical Equipment Backing Panels: DOC PS 1, Exposure 1, C-D Plugged, fire-retardant treated, in thickness indicated or, if not indicated, not less than 1/2-inch nominal thickness.

2.6 FASTENERS

A. General: Provide fasteners of size and type indicated that comply with requirements specified in this Article for material and manufacture.

1. Where rough carpentry is exposed to weather, in ground contact, pressure-preservative treated, or in area of high relative humidity, provide fasteners with hot-dip zinc coating complying with ASTM A 153/A 153M

B. Nails, Brads, and Staples: ASTM F 1667.

C. Power-Driven Fasteners: NES NER-272.

D. Wood Screws: ASME B18.6.1.

E. Lag Bolts: ASME B18.2.1

F. Bolts: Steel bolts complying with ASTM A 307, Grade A with ASTM A 563) hex nuts and, where indicated, flat washers.

G. Expansion Anchors: Anchor bolt and sleeve assembly of material indicated below with capability to sustain, without failure, a load equal to 6 times the load imposed when installed in unit masonry assemblies and equal to 4 times the load imposed when installed in concrete as determined by testing per ASTM E 488 conducted by a qualified independent testing and inspecting agency.

1. Material: Carbon-steel components, zinc plated to comply with ASTM B 633, Class Fe/Zn 5.
2. Material: Stainless steel with bolts and nuts complying with ASTM F 593 and ASTM F 594, Alloy Group 1 or 2

PART 3 - EXECUTION

3.1 INSTALLATION, GENERAL

A. Set rough carpentry to required levels and lines, with members plumb, true to line, cut, and fitted. Fit rough carpentry to other construction; scribe and cope as needed for accurate fit. Locate furring, nailers, blocking, grounds, and similar supports to comply with requirements for attaching other construction.

B. Do not splice structural members between supports, unless otherwise indicated.

C. Provide blocking and framing as indicated and as required to support facing materials, fixtures, specialty items, and trim.

1. Provide metal clips for fastening gypsum board or lath at corners and intersections where framing or blocking does not provide a surface for fastening edges of panels. Space clips not more than 16 inches o.c.

D. Sort and select lumber so that natural characteristics will not interfere with installation or with fastening other materials to lumber. Do not use materials with defects that interfere with function of member or pieces that are too small to use with minimum number of joints or optimum joint arrangement.

E. Comply with AWPA M4 for applying field treatment to cut surfaces of preservative-treated lumber.

1. Use inorganic boron for items that are continuously protected from liquid water.
2. Use copper naphthenate for items not continuously protected from liquid water.

F. Securely attach rough carpentry work to substrate by anchoring and fastening as indicated, complying with the following:

1. NES NER-272 for power-driven fasteners.
2. Table 2304.9.1, "Fastening Schedule," in ICC's International Building Code.

G. Use common wire nails, unless otherwise indicated. Select fasteners of size that will not fully penetrate members where opposite side will be exposed to view or will receive finish materials. Make tight connections between members. Install fasteners without splitting wood; do not countersink nail heads, unless otherwise indicated.

H. For exposed work, arrange fasteners in straight rows parallel with edges of members, with fasteners evenly spaced, and with adjacent rows staggered.

1. Comply with approved fastener patterns where applicable cardboard.
2. Use finishing nails, unless otherwise indicated. Do not countersink nail heads.

3.2 WOOD SLEEPER, BLOCKING, AND NAILER INSTALLATION

A. Install where indicated and where required for screeding or attaching other work. Form to shapes indicated and cut as required for true line and level of attached work. Coordinate locations with other work involved.

B. Attach items to substrates to support applied loading. Recess bolts and nuts flush with surfaces, unless otherwise indicated.

C. Provide permanent grounds of dressed, pressure-preservative-treated, key-beveled lumber not less than 1-1/2 inches wide and of thickness required to bring face of ground to exact thickness of finish material. Remove temporary grounds when no longer required.

END OF SECTION 061000

SECTION 061063 - EXTERIOR ROUGH CARPENTRY

PART 1 - GENERAL

1.1 SUMMARY

A. Section Includes:

1. Wood Framing
2. Wood blocking and nailers.
3. Plywood backing panels.

B. Related Requirements:

1.

1.2 ACTION SUBMITTALS

A. Product Data: For preservative-treated wood products.

1.3 INFORMATIONAL SUBMITTALS

A. Material Certificates:

1. For preservative-treated wood products. Indicate type of preservative used and net amount of preservative retained.

B. Evaluation Reports: For preservative-treated wood products, from ICC-ES.

PART 2 - PRODUCTS

2.1 LUMBER, GENERAL

A. Comply with DOC PS 20 and with grading rules of lumber grading agencies certified by ALSC's Board of Review as applicable. If no grading agency is indicated, comply with the applicable rules of any rules-writing agency certified by ALSC's Board of Review.

1. Factory mark each item with grade stamp of grading agency.
2. For items that are exposed to view in the completed Work, mark grade stamp on end or back of each piece or omit grade stamp and provide certificates of grade compliance issued by grading agency.
3. Provide dressed lumber, S4S, unless otherwise indicated.

B. Maximum Moisture Content:

1. Boards: 19 percent.

2. Dimension Lumber: 19 percent.
3. Timber. 19 percent.

2.2 LUMBER

A. Dimension Lumber: No. 2 grade and any of the following species:

1. Hem-fir or hem-fir (North); NLGA, WCLIB, or WWPA.
2. Douglas fir-larch, Douglas fir-larch (North), or Douglas fir-south; NLGA, WCLIB, or WWPA.

2.3 PRESERVATIVE TREATMENT

A. Pressure treat boards and dimension lumber with waterborne preservative according to AWPA U1; Use Category UC3b for exterior construction not in contact with the ground, and Use Category UC4a for items in contact with the ground.

B. Pressure treat timber with waterborne preservative according to AWPA U1; Use Category UC4a.

1. Treatment with CCA shall include post-treatment fixation process.

C. Preservative Chemicals: Acceptable to authorities having jurisdiction.

1. Do not use chemicals containing arsenic or chromium except for timber posts and poles.

D. After treatment, redry boards, dimension lumber to 19 percent maximum moisture content.

E. Mark treated wood with treatment quality mark of an inspection agency approved by ALSC's Board of Review.

1. For items indicated to receive a stained or natural finish, mark each piece on surface that will not be exposed.

F. <u>Application: Treat all wood unless otherwise indicated.</u>

2.4 FASTENERS

A. General: Provide fasteners of size and type indicated, acceptable to authorities having jurisdiction, and that comply with requirements specified in this article for material and manufacture. Provide nails or screws, in sufficient length, to penetrate not less than 1-1/2 inches (38 mm) into wood substrate.

1. Use stainless steel unless otherwise indicated.
2. For pressure-preservative-treated wood, use stainless steel fasteners.

B. Post installed Anchors: Stainless steel, chemical or torque-controlled expansion anchors with capability to sustain, without failure, a load equal to 6 times the load imposed

when installed in unit masonry assemblies and equal to 4 times the load imposed when installed in concrete as determined by testing according to ASTM E488, conducted by a qualified independent testing and inspecting agency.

1. Stainless steel bolts and nuts complying with ASTM F593 and ASTM F594, Alloy Group 1 or 2 (ASTM F738M and ASTM F836M, Grade A1 or Grade A4).

2.5 METAL ACCESSORIES

A. Stainless Steel Sheet: ASTM A240/A240M or ASTM A666, Type 316.

PART 3 - EXECUTION

3.1 INSTALLATION

A. Set work to required levels and lines, with members plumb, true to line, cut, and fitted. Fit work to other construction; scribe and cope as needed for accurate fit.

B. Framing Standard: Comply with AF&PA WCD1 unless otherwise indicated.

C. Install metal framing anchors to comply with manufacturer's written instructions.

D. Do not splice structural members between supports unless otherwise indicated.

E. Apply copper naphthenate field treatment to comply with AWPA M4, to cut surfaces of preservative-treated lumber.

F. Securely attach exterior rough carpentry work to substrate by anchoring and fastening as indicated, complying with the following:

1. ICC-ES AC70 for power-driven fasteners.
2. "Fastening Schedule" in ICC's International Building Code, NJ Edition.

END OF SECTION 061063

SECTION 061600 - SHEATHING

PART 1 - GENERAL

1.1 SUMMARY

A. Section Includes:

1. Wall sheathing.
2. Sheathing joint and penetration treatment.

1.2 ACTION SUBMITTALS

A. Product Data: For each type of process and factory-fabricated product.

1.3 INFORMATIONAL SUBMITTALS

A. Evaluation Reports: For the following, from ICC-ES:

1. Wood-preservative-treated plywood.

PART 2 - PRODUCTS

2.1 PERFORMANCE REQUIREMENTS

2.2 PRESERVATIVE-TREATED PLYWOOD

A. Preservative Treatment by Pressure Process: AWPA U1; Use Category UC2, Use Category UC3b for interior & exterior construction Mark plywood with appropriate classification marking of an inspection agency acceptable to authorities having jurisdiction.

B. Application: Treat all plywood unless otherwise noted.

2.3 WALL SHEATHING

A. Plywood Sheathing: Either BS 1088 or BS 6566 marine grade sheathing.

B. Cementitious Backer Units: ASTM C1325, Type A.
1. Thickness: As indicated.

2.4 MISCELLANEOUS MATERIALS

A. Adhesives for Field Gluing Panels to Wood Framing: Formulation complying with APA AFG-01 that is approved for use with type of construction panel indicated by manufacturers of both adhesives and panels.

2.5 FASTENERS

A. General: Provide fasteners of size and type indicated that comply with requirements specified in this article for material and manufacture.

1. For roof and wall sheathing, provide fasteners of Type 316 stainless steel.
2. For roof and wall sheathing, provide fasteners with organic-polymer or other corrosion-protective coating having a salt-spray resistance of more than 800 hours according to ASTM B117.

PART 3 - EXECUTION

3.1 INSTALLATION, GENERAL

A. Do not use materials with defects that impair quality of sheathing or pieces that are too small to use with minimum number of joints or optimum joint arrangement. Arrange joints so that pieces do not span between fewer than three support members.

B. Cut panels at penetrations, edges, and other obstructions of work; fit tightly against abutting construction unless otherwise indicated.

C. Securely attach to substrate by fastening as indicated, complying with the following:

1. Table 2304.9.1, "Fastening Schedule," in the ICC's International Building Code, NJ Edition.
2. ICC-ES evaluation report for fastener.

D. Coordinate wall and roof sheathing installation with flashing and joint-sealant installation so these materials are installed in sequence and manner that prevent exterior moisture from passing through completed assembly.

E. Do not bridge building expansion joints; cut and space edges of panels to match spacing of structural support elements.

3.2 WOOD STRUCTURAL PANEL INSTALLATION

A. General: Comply with applicable recommendations in APA Form No. E30, "Engineered Wood Construction Guide," for types of structural-use panels and applications indicated.

B. Fastening Methods: Fasten panels as indicated below:

1. Wall and Roof Sheathing:

a. Nail to wood framing. Apply a continuous bead of glue to framing members at edges of wall sheathing panels.
b. Screw to cold-formed metal framing.
c. Space panels 1/8 inch (3 mm) apart at edges and ends.

3.3 CEMENTITIOUS BACKER UNIT INSTALLATION

A. Install panels and treat joints according to ANSI A108.11 and manufacturer's written instructions for type of application indicated.

END OF SECTION 061600

SECTION 066113 - SIMULATED STONE (NATURAL QUARTZ AND RESIN) FABRICATIONS

PART 1 - GENERAL

1.01 SUMMARY

A. Drawings and general provisions of the Contract, including General and Supplementary Conditions and Division 01 Specification Sections, apply to this Section.

1.02 THIS SECTION INCLUDES, BUT IS NOT LIMITED TO, THE FOLLOWING HORIZONTAL AND TRIM QUARTZ SURFACING PRODUCT TYPES:

1. Bar tops

1.03 RELATED REQUIREMENTS

A. Section 06 10 00 – Rough Carpentry
B. Section 07 92 00 – Joint Sealants
C. Section 12 30 00 – Casework
D. Section 22 00 00 – Plumbing
E. Section 26 27 26 – Wiring Devices

1.04 REFERENCES

A. ASTM C373 – Standard Test Method for Water Absorption, Bulk Density, Apparent Porosity, and Apparent Specific Gravity of Fired Whiteware Products, Ceramic Tiles, and Glass Tiles.
B. ASTM D570 – Standard Test Method for Water Absorption of Plastics.
C. ASTM D696 – Standard Test Method for Coefficient of Linear Thermal Expansion of Plastics Between -30°C and 30°C with a Vitreous Silica Dilatometer.
D. ASTM D790 – Standard Test Methods for Flexural Properties of Unreinforced and Reinforced Plastics and Electrical Insulating Materials.
E. ASTM D792 – Standard Test Methods for Density and Specific Gravity (Relative Density) of Plastics by Displacement.
F. ASTM E84 – Standard Test Method for Surface Burning Characteristics of Building Materials.
G. ASTM G21 – Standard Practice for Determining Resistance of Synthetic Polymeric Materials to Fungi.
H. ASTM G22 – Standard Practice for Determining Resistance of Plastics to Bacteria.
I. NFPA (National Fire Protection Association) - NFPA 101®, Life Safety Code®.
J. NFPA 255 – Standard Method of Test of Surface Burning Characteristics of Building Materials.
K. UL (Underwriters Laboratories) - UL 723 – Standard Test Method for Surface Burning Characteristics of Building Materials.
L. NSF (NSF International) NSF/ANSI Standard 51 – Food Equipment Materials.
M. UL Environment/GREENGUARD - UL 2818 – Standard for Chemical Emissions for Building Materials, Finishes and Furnishings, Section 7.1.

1.05 SUBMITTALS

A. Submit product data for each type of product indicated.
   1. Submit manufacturer's product data on material characteristics, performance properties, fabrication instructions, installation instructions and maintenance instructions.
B. Shop drawings:
   1. Show location of each item; provide complete detailed and dimensioned plans and elevations, large-scale details, attachment devices and other components.
      a. Show the following:

1) Details, edge details, attachments, etc.
2) Locations and sizes of furring, blocking, including concealed blocking and reinforcement specified in other Sections.
3) Fabrication details for brackets.
4) Locations and sizes of cutouts and holes for plumbing fixtures, faucets, soap dispensers, waste receptacle and other items installed in quartz surface.
5) Locations and sizes of cutouts for sink installation and lavatory installation.
6) Type of sealant.
7) Type of adhesive.
8) Seam locations.

C. Samples:
1. For each type of product indicated:
a. Submit minimum 2-inch-by-2-inch sample in specified color. For viewing pattern or veining, submit minimum 4-inch-by-4-inch samples.
b. Cut sample and seam together for representation of seaming techniques.
c. Indicate full range of color and pattern variation.
d. Approved samples will be retained as a standard for work.

D. Product data:
1. Indicate product description, fabrication information and compliance with specified performance requirements.

E. Fabricator/installer qualifications:
1. Provide copy of certification number.

F. Certificates: Certify that products meet or exceed requirements.
1. UL Environment– GREENGUARD and GREENGUARD Gold, current low emitting VOC certification of quartz surface and solid surface products.
2. UL Environment– GREENGUARD and GREENGUARD Gold, current low emitting VOC certification for manufacturer's recommended adhesive and/or sealant.
3. UL Environment – Mold Resistance Certification in accordance with UL 2824.

G. Fire test response characteristics:
1. United States – Provide Class A surface burning characteristics as determined by testing products per UL 723 (ASTM E 84, NFPA 255) or another testing and inspecting agency acceptable to authorities having jurisdiction.
a. Flame Spread Index: 25 or less.
b. Smoke Developed Index: 450 or less.

H. Maintenance data:
1. Submit manufacturer's care and maintenance data.
2. Include in project closeout documents.

1.06 QUALITY ASSURANCE

A. Qualifications:
a. Shop employs skilled workers who custom fabricate products similar to those required for this project and whose products have a record of successful in-service performance.

B. Fabricator/installer qualifications:
1. Work of this section shall be by a certified fabricator/installer, certified in writing by the manufacturer or designated representative.

C. Allowable tolerances:
1. Variation in component size: ±1/8 inch (3 mm) over a 10 foot length.
2. Location of openings: ±1/8 inch (3 mm) from indicated location.
3. Minimum of 1/16 inch and a maximum of 1/8 inch (3 mm) clearance between quartz surfaces and each wall.

D. Coordination drawings:
1. Shall be prepared indicating:
a. Plumbing work.
b. Electrical work.

c. Miscellaneous steel for the general work.
d. Indicate location of all walls (rated and non-rated), blocking locations and recessed wall items, etc.

2. Content:
   a. Project-specific information, drawn accurately to scale.
   b. Do not base coordination drawings on reproductions of the contract documents or standard printed data.
   c. Indicate dimensions shown on the contract drawings and make specific note of dimensions that appear to be in conflict with submitted equipment and minimum clearance requirements.
   d. Provide alternate sketches to designer for resolution of such conflicts.
      1) Minor dimension changes and difficult installations will not be considered changes to the contract.
3. Drawings shall:
   a. Be produced in 1/2 inch scale for all fabricated items.
4. Drawings must be complete and submitted to the architect within 60 days after award of contract for record only.
   a. No review or approval will be forthcoming.
   b. Coordination drawings are required for the benefit of contractor's fabricators/installers as an aid to coordination of their work to eliminate or reduce conflicts that may arise during the installation of their work.

E. Pre-installation conference:
   1. Conduct conference at project site to comply with requirements in Division 1.

1.07 DELIVERY, STORAGE AND HANDLING

A. Deliver no components to project site until areas are ready for installation.
B. Store components indoors in clean and dry area prior to installation.
C. Handle materials to prevent damage to finished surfaces.
D. Follow manufacturer's safe handling and storage recommendations.
E. Provide protective coverings to prevent physical damage or staining following installation for duration of project.

1.08 WARRANTY

A. Provide manufacturer's 10-year warranty.
B. Damage caused by physical or chemical abuse or damage from excessive heat will not be warranted.

1.09 MAINTENANCE

A. Provide maintenance requirements as specified by the manufacturer.

PART 2 - PRODUCTS

2.01 MANUFACTURERS

A. Contract Documents are based on products manufactured by DuPont (E. I. du Pont de Nemours and Company). Provide Corian® Quartz, formerly known as Zodiaq® (basis of design) subject to compliance with the requirements.
   a. Address: Corian® Design, Corian® Quartz, Chestnut Run Plaza 735, 974 Centre Road, P.O. Box 2915, Wilmington, DE 19805.
   b. Phone: (800) 426-7426.
   c. Website: www.surfaces.dupont.com; www.corianquartz.com.
   d. Subject to compliance with the requirements, provide the following product: quartz surface from Corian® Design (basis of design).
B. Substitutions: Subject to compliance with requirements, provide products that are Architect approved equals.

2.02 MATERIALS

A. Material:
   1. Corian® Quartz material composed of ~93 % natural quartz with pigments and resin.
   2. Corian®Quartz Terra Collection product composed of pre-consumer and/or post-consumer glass, natural quartz, pigments and resin.
   3. Material shall have minimum physical and performance properties as specified.

B. Thickness:
   1. 3 cm (1-1/8 inch).

C. Edge treatment:
   1. Exposed Edge
      a. As indicated on the drawings
   2. Appliance Edge.
      a. Finished.

D. Seam width:
   1. 1/16 inch nominal unless otherwise specified.

E. Backsplash:
   1. Applied.

F. Endsplash:
   1. Applied.

G. Corian® Quartz Performance Properties (TYPICAL RESULTS):

1.	Flexural Strength	> 5,300 psi	ASTM D790
2.	Flexural Modulus	5.3–5.7 X 106 psi	ASTM D790
3.	Compression Strength (Dry)	27,300 psi	ASTM C170
4.	Compression Strength (Wet)	24,400 psi	ASTM C170
5.	Hardness	7	Mohs Hardness Scale
6.	Thermal Expansion	1.45 x 10-5 meter/meter deg C	ASTM D696
7.	Thermal Expansion	2.61 x 10-5 inch/inch deg F	ASTM D696
8.	Colorfastness	Passes	NEMA LD 3-3.3
9.	Gloss (60° Gardner)	45–50	ANSI Z124
10.	Wear and Cleanability	Passes	CSA B45.5-11/IAPMO Z124-2011
11.	Stain Resistance	Passes	CSA B45.5-11/IAPMO Z124-2011
12.	Fungal Resistance	No observed growth on product	ASTM G 21
13.	Bacterial Resistance	No observed growth on product	ASTM G 22
14.	High Temperature Resistance a. Temperature, 356 deg F	None to slight effect	NEMA LD 3-3.6
15.	Boiling Water Resistance	None to slight effect	NEMA LD 3-3.5
16.	Freeze-Thaw Cycling	Unaffected	ASTM C1026
17.	Point Impact	Passes	ANSI Z124.6.4.2
18.	Ball Impact Resistance a. Slabs, No fracture,1/2 lb. ball – 2cm and 3 cm	No failure at 164 inches	NEMA LD 3-3.8
19.	Static Coefficient of Friction	0.89 (Dry), 0.61 (Wet)	ASTM C1028
20.	Abrasion Resistance	139	ASTM C501
21.	Density	2.4 g/cm3	ASTM D792
22.	Water Absorption, Long-term	0.12%	ASTM C373
23.	Water Absorption, Short	< 0.04%	ASTM C373
24.	Moisture Expansion	< 0.01% average	ASTM C370
25.	Flammability	Class A, all colors	NFPA 101® Life Safety Code
26.	Flame Spread Index	FSI 0 for 3 cm	UL 723
27.	Flame Spread Index	FSI ≤ 5 for 2 cm	UL 723
28.	Smoke Developed Index	SDI ≤ 40 for 3 cm	UL 723
29.	Smoke Developed Index	SDI ≤ 75 for 2 cm	UL 723
30.	Nominal Thickness	2 cm and 3 cm	
31.	Nominal Weight per square foot for 2cm thickness is 10 pounds		

32. Nominal Weight per square foot for 3cm thickness is 15 pounds

H. CORIAN® QUARTZ (ZODIAQ®) CERTIFICATIONS and APPROVALS:
1. New York City Material Equipment Acceptance Number for DuPont™ Zodiaq® is 431-00-M.
2. NSF/ANSI Standard 51, Listed by NSF.
3. UL Environment/GREENGUARD Certified.
4. UL Environment/GREENGUARD Gold Certified.
5. UL 2824 - Mold Resistant.
6. Kosher, Listed by Star-K.

2.03 ACCESSORY PRODUCTS

A. Mounting Adhesives:
1. 100 percent Silicone Sealant.

B. Seam Adhesive:
1. Corian® Joint Adhesive to create color-coordinated seam.

2.04 FABRICATION

A. Fabricate components to greatest extent practical to sizes and shapes indicated, in accordance with approved shop drawings and manufacturer's printed instructions and technical bulletins.

B. Form joints between components using manufacturer's standard joint adhesive.
a. Reinforce as required.
2. Provide factory cutouts for plumbing fittings and bath accessories as indicated on the drawings.
3. Rout and finish component edges with clean, sharp returns.
4. Rout cutouts, radii and contours to template.

C. Smooth edges.

2.05 FINISHES

A. Select from the manufacturer's standard color chart.
1. Color: As selected by the Architect from the full range of colors and finishes.

PART 3 - EXECUTION

3.01 INSTALLATION

A. General
1. Install countertop materials in accordance with manufacturer's instructions.
2. Additional weight from attached sink or lavatory will affect maneuverability of tops during transportation and installation.
3. Carefully plan work to avoid damaging finished tops during transportation and installation.

B. Install components plumb and level, in accordance with approved shop drawings and product installation details.
1. Tops:
a. Flat and true to within 1/8 inch (3 mm) of a flat surface over a 10-foot length.
b. Allow a minimum of 1/16 inch to a maximum of 1/8 inch (3 mm) clearance between surface and each wall.
c. Form field joints using manufacturer's recommended adhesive (Corian® Joint Adhesive), with joint widths no greater than 1/8 inch (3 mm) in finished work.
d. Keep components and hands clean when making joints.

C. Provide backsplashes and end splashes as indicated on the drawings.
1. Adhere to countertops using silicone sealant.
a. Keep components and hands clean when working with silicone sealant.

3.02 CONNECTIONS:

A. Make plumbing connections in accordance with Division 22.
B. Make electrical connections in accordance with Division 26.

3.03 CLEANING AND PROTECTION

A. Keep components and hands clean during installation.
B. Remove adhesives, sealants and other stains in accordance with manufacturer's instructions.
   1. Clean exposed surfaces in accordance with manufacturer's instructions.
   2. Components shall be clean on date of substantial completion.
      a. Protect surfaces from damage until date of substantial completion.
   3. Replace or repair damaged work in a satisfactory manner.

END OF SECTION - 066113

SECTION 066400 - PLASTIC PANELING

PART 1 - GENERAL

1.1 SUMMARY

A. Section includes plastic sheet paneling.

1.2 ACTION SUBMITTALS

A. Product Data: For each type of product.

B. Samples: For plastic paneling and trim accessories.

1.3 QUALITY ASSURANCE

A. Testing Agency: Acceptable to authorities having jurisdiction.

PART 2 - PRODUCTS

2.1 PLASTIC SHEET PANELING

A. Basis of Design Manufacturer: Richelieu Lincoln Park, 132 Beaver Brook Road, Lincoln Park, NJ 07035. Phone: (973) 317-1400.

1. Revolution Exterior Panels

B. High-Density Polyethylene Plastic Paneling: plastic panels complying with ASTM D4976. Panels shall be USDA accepted for incidental food contact.

1. Surface-Burning Characteristics: As follows when tested by a qualified testing agency according to ASTM E84. Identify products with appropriate markings of applicable testing agency.

a. Flame-Spread Index: 25 or less.
b. Smoke-Developed Index: 450 or less.

2. Nominal Thickness: Not less than 0.5 inch (12.7 mm).
3. Surface Finish: As selected by Architect from manufacturer's full range.
4. Color: As selected by Architect from manufacturer's full range.

2.2 PRODUCT SUBSTITUTIONS

A. Substitutions: Subject to compliance with requirements, available manufacturers with minimum five years' experience in manufacture of similar products in successful use in

similar applications.

B. Approval of Comparable Products: Submit the following in accordance with project substitution requirements, within time allowed for substitution review:
   1. Product data, including certified independent test data indicating compliance with requirements.
   2. Samples of each component.
   3. Sample submittal from similar project.
   4. Project references: Minimum of five installations not less than five years old, with Owner and Architect contact information.
   5. Sample warranty.

2.3 ACCESSORIES

A. Trim Accessories: Manufacturer's standard one-piece vinyl extrusions designed to retain and cover edges of panels. Provide division bars, inside corners and caps as needed to conceal edges.

   1. Color: As selected by Architect from manufacturer's full range.

B. Sealant: Mildew-resistant, single-component, neutral-curing silicone sealant recommended by plastic paneling manufacturer and complying with requirements in Section 079200 "Joint Sealants."

PART 3 - EXECUTION

3.1 PREPARATION

A. Clean substrates of substances that could impair adhesive bond, including oil, grease, dirt, and dust.

B. Condition panels by unpacking and placing in installation space before installation according to manufacturer's written recommendations.

C. Lay out paneling before installing. Locate panel joints where indicated.

3.2 INSTALLATION

A. Install plastic paneling according to manufacturer's written instructions.

B. Install panels in a full spread of adhesive.

C. Install trim accessories with adhesive. Do not fasten through panels.

D. Fill grooves in trim accessories with sealant before installing panels, and bed inside corner trim in a bead of sealant.

E. Maintain uniform space between panels and wall fixtures. Fill space with sealant.

F. Remove excess sealant and smears as paneling is installed. Clean with solvent recommended by sealant manufacturer and then wipe with clean dry cloths until no residue remains.

END OF SECTION 066400

SECTION 067113 - COMPOSITE TRIM ARCHITECTURAL ELEMENTS

PART 1 GENERAL

1.1 SECTION INCLUDES

A. Hybrid Aluminum/WPC Architectural trim.

1.2 RELATED SECTIONS

A. Section 06100 - Rough Carpentry.

1.3 REFERENCES

A. ASTM International (ASTM):

1. ASTM E84 - Standard Test Method for Surface Burning Characteristics of Building Materials.

B. JIS Japanese International Standards (JIS)

C. DIN German Institute for Standardization (DIN)

1.4 SUBMITTALS

A. Submit under provisions of Section 01300.

B. Product Data: Manufacturer's data sheets on each product to be used, including:
1. Manufacturer's printed installation instructions, showing required preparation and installation procedures.
2. Storage and handling requirements and recommendations.
3. Installation methods including anchorage details.
4. Cleaning and maintenance instructions.

C. Shop Drawings: Provide shop drawings indicating details of construction, anchorage and installation. Include statement that anchorage methods comply with applicable building codes and loadings for the type of framing and condition of the supporting construction and details.

D. Verification Samples: For each product specified, two samples 6 inches in length, representing materials, colors, patterns, textures, and finishes to be installed.
1. Closeout Submittals: Documentation of manufacturer's warranty.

1.5 QUALITY ASSURANCE

A. Installer: Minimum 2 years' experience with similar technologies.

B. Mock-Up: Provide a mock-up for evaluation of surface preparation techniques and application workmanship.
1. Finish areas designated by Architect.
2. Do not proceed with remaining work until workmanship and appearance are approved by Architect.
3. Subject to approval by Architect, mock-up may be retained as part of finish work.

C. Pre-Installation Meetings: Conduct pre-installation meetings to verify project requirements, substrate conditions, construction documents, details and manufacturer's warranty requirements.

1.6 DELIVERY, STORAGE, AND HANDLING

A. Delivery: Deliver materials in manufacturer's original, unopened, undamaged rolls/pallets with identification labels intact.

B. Storage and Protection: Store materials protected from exposure to harmful environmental conditions and at temperature and humidity conditions recommended by the manufacturer.

1.7 PROJECT CONDITIONS

A. Maintain environmental conditions (temperature, humidity, and ventilation) within limits recommended by manufacturer for optimum results. Do not install products under environmental conditions outside manufacturer's recommended limits.

1.8 WARRANTY

A. Manufacturer's Warranty: Manufacturer's standard limited 10-year non-prorated warranty.

PART 2 PRODUCTS

2.1 MANUFACTURERS

A. Basis of Design Manufacturer: Geolam, which is located at: 9 Shorncliffe Ave.; Toronto, ON, Canada M4V 1S9; Toll Free Tel: 877-627-3530; Tel: 416-548-7450; Fax: 416-548-7894; Email:request info (info@geolaminc.com); Web:www.geolaminc.com

B. Substitutions: Subject to compliance with requirements, available manufacturers with minimum five years' experience in manufacture of similar products in successful use in similar applications..

C. Requests for substitutions will be considered in accordance with provisions of Section.Approval of Comparable Products: Submit the following in accordance with project substitution requirements, within time allowed for substitution review:Product data, including certified independent test data indicating compliance with requirements.
   2. Samples of each component.
   3. Sample submittal from similar project.
   4. Project references: Minimum of five installations not less than five years old, with Owner and Architect contact information.
   5. Sample warranty.

1.1 HYBRID ALUMINUM/WPC ARCHITECTURAL ELEMENTS

A. Basis of Design: Soleo 6040 as manufactured by Geolam.
   1. Hot Co-Extrusion of Aluminum and Wood Composite.
   2. Physical Properties:
      a. Class B-ASTM E-84
      b. Aluminum Type: A60636 Per JISH4100.

c. Surface Finish: AA10 Per JIS H8601.
d. Tensile Strength: 150 N/mm2 or better.
e. Load Bearing Capacity: 110 N/mm2 or better.
f. Bonding Layer: Olefin Resin.
g. Surface Layer: Regenerated wood flour resin containing PP based Non-halogenated flame retardant.
h. Accelerated Weathering Test: DIN ISO 16474-2 Passed.
i. Accelerated Weathering Test: JIS A 1415 5000 hours. 2.1 DE.
j. Salt Spray Test: DIN EN ISO 9227 NSS.
k. Sulfur Dioxide Corrosion Testing: DIN EN ISO 3221.
l. Color Stability Test: JIS K5400.
m. Aging Test: JIS K1571-2010.
n. Core in Anodized Aluminum Alloy: A60635S-T5.

3. Dimensions:
   a. Width: 6 in (150 mm).
   b. Depth: 2 in (50 mm).
   c. Length: As shown on the drawings.
4. Provide 316 stainless steel U-brackets & fasteners
5. Color: As selected by the Architect from the full range of colors.

PART 2 EXECUTION

2.1 EXAMINATION AND PREPARATION

A. Examine existing conditions and do not proceed with installation until substrates have been properly prepared and deviations from manufacturer's recommended tolerances are corrected. Prepare surfaces using the methods recommended by the manufacturer for achieving the best result for the substrate under the project conditions.

B. If preparation is the responsibility of another installer, notify Architect in writing of deviations from manufacturer's recommended installation tolerances and conditions.

C. Commencement of installation constitutes acceptance of conditions.

2.2 INSTALLATION

A. Install in accordance with manufacturer's written instructions and recommendations including but not limited to the following.

B. Protect installed work from damage due to subsequent construction activity on the site.

C. Clean using materials recommended by the manufacturer to remove stains, dirt and debris prior to final acceptance.

END OF SECTION - 061800

SECTION 072100 - THERMAL INSULATION

PART 1 - GENERAL

1.1 RELATED DOCUMENTS

A. Drawings and general provisions of the Contract, including General and Supplementary Conditions and Division 01 Specification Sections, apply to this Section.

1.2 SUMMARY

A. This Section includes the following:
   1. Concealed building insulation.
   2. Vapor retarders.

B. Related Sections include the following:
   1. Division 06 Section 061600 Sheathing
   2. Division 07 Section 074100 Manufactured Roof and Wall Panels
   3. Division 21 Section "Fire-Suppression Systems Insulation".
   4. Division 22 Section "Plumbing Insulation".
   5. Division 23 Section "HVAC Insulation".

1.3 DEFINITIONS

A. Mineral-Fiber Insulation: Insulation composed of rock-wool fibers, slag-wool fibers, or glass fibers; produced in boards and blanket with latter formed into batts (flat-cut lengths) or rolls.

1.4 PERFORMANCE REQUIREMENTS

A. Plenum Rating: Provide glass-fiber insulation where indicated in ceiling plenums whose test performance is rated as follows for use in plenums as determined by testing identical products per "Erosion Test" and "Mold Growth and Humidity Test" described in UL 181, or on comparable tests from another standard acceptable to authorities having jurisdiction.

   1. Erosion Test Results: Insulation shows no visible evidence of cracking, flaking, peeling, or delamination of interior surface of duct assembly, after testing for 4 hours at 2500-fpm air velocity.
   2. Mold Growth and Humidity Test Results: Insulation shows no evidence of mold growth, delamination, or other deterioration due to the effects of high humidity, after inoculation with Chaetomium globosium on all surfaces and storing for 60 days at 100 percent relative humidity in the dark.

1.5 SUBMITTALS

A. Product Data: For each type of product indicated.

B. Product Test Reports: Based on evaluation of comprehensive tests performed by a qualified testing agency for insulation products.

C. Research/Evaluation Reports: For foam-plastic insulation.

1.6 QUALITY ASSURANCE

A. Source Limitations: Obtain each type of building insulation through one source from a single manufacturer.

B. Fire-Test-Response Characteristics: Provide insulation and related materials with the fire-test-response characteristics indicated, as determined by testing identical products per test method indicated below by UL or another testing and inspecting agency acceptable to authorities having jurisdiction. Identify materials with appropriate markings of applicable testing and inspecting agency.

1. Surface-Burning Characteristics: ASTM E 84.
2. Fire-Resistance Ratings: ASTM E 119.
3. Combustion Characteristics: ASTM E 136.

1.7 DELIVERY, STORAGE, AND HANDLING

A. Protect insulation materials from physical damage and from deterioration by moisture, soiling, and other sources. Store inside and in a dry location. Comply with manufacturer's written instructions for handling, storing, and protecting during installation.

B. Protect plastic insulation as follows:

1. Do not expose to sunlight, except to extent necessary for period of installation and concealment.
2. Protect against ignition at all times. Do not deliver plastic insulating materials to Project site before installation time.
3. Complete installation and concealment of plastic materials as rapidly as possible in each area of construction.

PART 2 - PRODUCTS

2.1 MANUFACTURERS

A. In other Part 2 articles where titles below introduce lists, the following requirements apply to product selection:
   1. Manufacturers: Subject to compliance with requirements, provide products by one of the manufacturers specified.

2.2 FOAM-PLASTIC BOARD INSULATION

A. Extruded-Polystyrene Board Insulation: ASTM C 578, of type and density indicated below, with maximum flame-spread and smoke-developed indexes of 75 and 450, respectively:

1. Available Manufacturers:

   a. DiversiFoam Products.
   b. Dow Chemical Company.
   c. Owens Corning.
   d. Pactiv Building Products Division.

2. Type X, 15 psi - 1.30 lb/cu. ft.

B. Molded-Polystyrene Board Insulation: ASTM C 578, of type and density indicated below, with maximum flame-spread and smoke-developed indexes of 75 and 450, respectively:

C. Manufacturers:

   a. DiversiFoam Products.
   b. Manufacturers with a third-party certification program satisfying model building code mandatory requirements for foam plastics.

2. Type I, 0.90 lb/cu. ft.
3. Type VIII, 1.15 lb/cu. ft.
4. Type II, 1.35 lb/cu. ft.

D. Foil-Faced, Polyisocyanurate Board Insulation: ASTM C 1289, Type I, Class with maximum flame-spread and smoke-developed indexes of 75 and 450, respectively, based on tests performed on unfaced core on thicknesses up to 4 inches.

1. For above roof deck installations only.

Available Manufacturers:

   a. Atlas Roofing Corporation.
   b. Dow Chemical Company.
   c. Rmax, Inc.

2.3 MINERAL WOOL INSULATION

A. Available Manufacturers:

1. ROCKWOOL Comfortbatt
2. Owens Corning.
3. Johns Manville.
4. Knauf Fiber Glass.
5. CertainTeed Corporation.

B. Unfaced, Mineral-Fiber Blanket Insulation: ASTM C 665, Type I (blankets without membrane facing); consisting of fibers; with maximum flame-spread and smoke-developed indexes of 25 and 50, respectively; passing ASTM E 136 for combustion characteristics.

C. ASTM E84 Surface Burning Characteristics: Flame Spread = 0 / Smoke Developed = <5.

D. Semi-rigid batt insulation designed specifically for exterior steel stud wall applications. made from natural stone and contains up to 40% recycled content.

2.4 REINFORCED-POLYETHYLENE VAPOR RETARDERS

A. Reinforced-Polyethylene Vapor Retarders: Sheet with outer layers of polyethylene film laminated to an inner reinforcing layer consisting of either nylon cord or polyester scrim and weighing not less than 20 lb/1000 sq. ft. (9 kg/100 sq. m), with maximum permeance rating of 0.1 perm (5.7 ng/Pa x s x sq. m).

B. Vapor-Retarder Tape: Pressure-sensitive tape of type recommended by vapor-retarder manufacturer for sealing joints and penetrations in vapor retarder. The Seams shall be overlapped not less than 12 inches.

C. Vapor-Retarder Fasteners: Pancake-head, self-tapping steel drill screws; with fender washers.

D. Single-Component Nonsag Urethane Sealant: ASTM C 920, Type I, Grade NS, Class 25, Use NT related to exposure, and Use O related to vapor-barrier-related substrates.

E. Adhesive for Vapor Retarders: Product recommended by vapor-retarder manufacturer and with demonstrated capability to bond vapor retarders securely to substrates indicated.

2.5 AUXILIARY INSULATING MATERIALS

A. Vapor-Retarder Tape: Pressure-sensitive tape of type recommended by insulation manufacturers for sealing joints and penetrations in vapor-retarder facings.

B. Adhesive for Bonding Insulation: Product with demonstrated capability to bond insulation securely to substrates indicated without damaging insulation and substrates.

2.6 INSULATION FASTENERS

A. Adhesively Attached, Spindle-Type Anchors: Plate welded to projecting spindle; capable of holding insulation of thickness indicated securely in position indicated with self-locking washer in place; and complying with the following requirements:

1. Available Products:

   a. AGM Industries, Inc.; Series T TACTOO Insul-Hangers.
   b. Eckel Industries of Canada; Stic-Klip Type N Fasteners.
   c. Gemco; Spindle Type.

2. Plate: Perforated galvanized carbon-steel sheet, 0.030 inch thick by 2 inches square.
3. Spindle: Copper-coated, low carbon steel; fully annealed; 0.105 inch in diameter; length to suit depth of insulation indicated.

B. Insulation-Retaining Washers: Self-locking washers formed from 0.016-inch- thick galvanized steel sheet, with beveled edge for increased stiffness, sized as required to hold insulation securely in place, but not less than 1-1/2 inches square or in diameter.

1. Available Products:

a. AGM Industries, Inc.; RC150.
b. AGM Industries, Inc.; SC150.
c. Gemco; Dome-Cap.

2. Protect ends with capped self-locking washers incorporating a spring steel insert to ensure permanent retention of cap in the following locations:

a. Crawlspaces.
b. Ceiling plenums.
c. Attic spaces.
d. Where indicated.

C. Anchor Adhesive: Product with demonstrated capability to bond insulation anchors securely to substrates indicated without damaging insulation, fasteners, and substrates.

1. Available Products:

a. AGM Industries, Inc.; TACTOO Adhesive.
b. Eckel Industries of Canada; Stic-Klip Type S Adhesive.
c. Gemco; Tuff Bond Hanger Adhesive.

PART 3 - EXECUTION

3.1 EXAMINATION

A. Examine substrates and conditions, with Installer present, for compliance with requirements of Sections in which substrates and related work are specified and for other conditions affecting performance.

1. Proceed with installation only after unsatisfactory conditions have been corrected.

3.2 PREPARATION

A. Clean substrates of substances harmful to insulation or vapor retarders, including removing projections capable of puncturing vapor retarders or of interfering with insulation attachment.

3.3 INSTALLATION, GENERAL

A. Comply with insulation manufacturer's written instructions applicable to products and application indicated.

B. Install insulation that is undamaged, dry, and unsoiled and that has not been left exposed at any time to ice, rain, and snow.

C. Extend insulation in thickness indicated to envelop entire area to be insulated. Cut and fit tightly around obstructions and fill voids with insulation. Remove projections that interfere with placement.

D. Water-Piping Coordination: If water piping is located within insulated exterior walls, coordinate location of piping to ensure that it is placed on warm side of insulation and insulation encapsulates piping.

E. For preformed insulating units, provide sizes to fit applications indicated and selected from manufacturer's standard thicknesses, widths, and lengths. Apply single layer of insulation units to produce thickness indicated unless multiple layers are otherwise shown or required to make up total thickness.

3.4 INSTALLATION OF GENERAL BUILDING INSULATION

A. Apply insulation units to substrates by method indicated, complying with manufacturer's written instructions. If no specific method is indicated, bond units to substrate with adhesive or use mechanical anchorage to provide permanent placement and support of units.

B. Seal joints between foam-plastic insulation units by applying adhesive, mastic, or sealant to edges of each unit to form a tight seal as units are shoved into place. Fill voids in completed installation with adhesive, mastic, or sealant as recommended by insulation manufacturer.

C. Set vapor-retarder-faced units with vapor retarder to warm-in-winter side of construction, unless otherwise indicated.

   1. Tape joints and ruptures in vapor retarder, and seal each continuous area of insulation to surrounding construction to ensure airtight installation.

D. Install mineral-fiber insulation in cavities formed by framing members according to the following requirements:

   1. Use insulation widths and lengths that fill the cavities formed by framing members. If more than one length is required to fill cavity, provide lengths that will produce a snug fit between ends.
   2. Place insulation in cavities formed by framing members to produce a friction fit between edges of insulation and adjoining framing members.
   3. Maintain 3-inch clearance of insulation around recessed lighting fixtures.
   4. For metal-framed wall cavities where cavity heights exceed 96 inches support unfaced blankets mechanically and support faced blankets by taping flanges of insulation to flanges of metal studs.

E. Install board insulation on concrete substrates by adhesively attached, spindle-type insulation anchors as follows:

   1. Fasten insulation anchors to concrete substrates with insulation anchor adhesive according to anchor manufacturer's written instructions. Space anchors

according to insulation manufacturer's written instructions for insulation type, thickness, and application indicated.

2. Apply insulation standoffs to each spindle to create cavity width indicated between concrete substrate and insulation.
3. After adhesive has dried, install board insulation by pressing insulation into position over spindles and securing it tightly in place with insulation-retaining washers, taking care not to compress insulation below indicated thickness.
4. Where insulation will not be covered by other building materials, apply capped washers to tips of spindles.

3.5 INSTALLATION OF VAPOR RETARDERS

A. General: Extend vapor retarder to extremities of areas to be protected from vapor transmission. Secure in place with adhesives or other anchorage system as indicated. Extend vapor retarder to cover miscellaneous voids in insulated substrates, including those filled with loose-fiber insulation.

B. Seal vertical joints in vapor retarders over framing by lapping not less than two wall studs. Fasten vapor retarders to wood framing at top, end, and bottom edges; at perimeter of wall openings; and at lap joints. Space fasteners 16 inches o.c.

C. Before installing vapor retarder, apply urethane sealant to flanges of metal framing including runner tracks, metal studs, and framing around door and window openings. Seal overlapping joints in vapor retarders with vapor-retarder tape according to vapor-retarder manufacturer's written instructions. Seal butt joints with vapor-retarder tape. Locate all joints over framing members or other solid substrates.

D. Firmly attach vapor retarders to framing and solid substrates with vapor-retarder fasteners as recommended by vapor-retarder manufacturer.

E. Seal joints caused by pipes, conduits, electrical boxes, and similar items penetrating vapor retarders with vapor-retarder tape to create an airtight seal between penetrating objects and vapor retarder.

F. Repair tears or punctures in vapor retarders immediately before concealment by other work. Cover with vapor-retarder tape or another layer of vapor retarder.

3.6 PROTECTION

A. Protect installed insulation and vapor retarders from damage due to harmful weather exposures, physical abuse, and other causes. Provide temporary coverings or enclosures where insulation is subject to abuse and cannot be concealed and protected by permanent construction immediately after installation.

END OF SECTION 072100

SECTION 072500 - WEATHER BARRIERS

PART 1 GENERAL

1.1 SECTION INCLUDES

A. Weather barrier membrane
B. Seam Tape
C. Flashing
D. Fasteners
E. Adhesive/Sealant
F. Furring Strips

1.2 REFERENCES
A. ASTM International
ASTM D5034; Test Method for Dry Tensile Strength
ASTM D779; Test Method for Water Vapor Resistance
ASTM E84; Test Method for Surface Burning Characteristics of Building Materials
ASTM E96; Test Method for Water Vapor Transmission of Materials
ASTM E2178; Test Method for Air Permeance of Building Materials
B. ICC – International Code Council
AC38; Acceptance Criteria for Water-Resistive Barriers

1.3 SUBMITTALS

A. Refer to Section 013300 Submittal Procedures.
B. Product Data: Submit manufacturer current technical literature for each component.
C. Samples: Weather Barrier membrane, minimum 6 inches by 9 inches.
D. Quality Assurance Submittals

1.4 QUALITY ASSURANCE

A. Installer Qualifications: Utilize an installer having demonstrated experience on projects of similar size and complexity.

1.5 DELIVERY, STORAGE & HANDLING

A. General: Comply with Division 1 Product Requirement Section.
B. Delivery: Deliver materials in manufacturer's original, unopened, undamaged containers with identification labels intact.
C. Storage and Protection: Store materials protected from exposure to harmful environmental conditions and at temperature and humidity conditions recommended by the manufacturer.

1.6 WARRANTY

A. Project Warranty: Refer to Conditions of the Contract for project warranty provisions.

B. Manufacturer's Warranty: Submit, for Owner's acceptance, manufacturer's standard warranty document executed by authorized company official. Manufacturer's warranty is in addition to, and not a limitation of, other rights Owner may have under contract documents.

1. Warranty Period: 25 years, beginning with date of substantial completion.

PART 2 PRODUCTS

2.1 WEATHER RESISTIVE BARRIER

A. Basis of Design Manufacturer: Benjamin Obdyke Incorporated.
   1. Contact: 400 Babylon Road, Suite A, Horsham, PA 19044; Telephone: (800) 523-5261; Fax: (215) 672-3731; E-mail: TechSupport@obdyke.com; website: www.benjaminobdyke.com.)

B. Proprietary Products/Systems: Weather Resistive Barrier, including the following:
   1. InvisiWrap™ UV Housewrap General Characteristics
      a. Description: bi-laminate substrate (2 layers of nonwoven with a proprietary UV coating).
      b. Appearance: un-printed black substrate
      c. Material: Polyester
      d. Width: 4.92 ft (1.5 m).
      e. Length: 100 ft (30.48 m).
      f. Weight: 19 lbs/roll
   2. InvisiWrap™ UV Housewrap Performance Characteristics
      a. Color: Black (exterior) with allowable UV exposure for 365 days
      b. Air Penetration: 0.0008 L/(sm^2) at 75 Pa, when tested in accordance with ASTM E2178.
      c. Water Vapor Transmission: 14 perms, when tested in accordance with ASTM E 96, Method A.
      d. Water Vapor Resistance: PASS. No transudation at 1/6th of an hour, when tested in accordance with ASTM D779.
      e. Tensile Strength: 128.9 MD, 74.9 CD, when tested in accordance with ASTM D5034.
      f. Surface Burning Characteristics: Class A, when tested in accordance with ASTM E84. Flame Spread: 15, Smoke Developed: 200.
      g. Cold Bend Test: PASS. No cracks when bent around 1/16" mandrel at 32°F, when tested in accordance with AC38.

2.2 PRODUCT SUBSTITUTIONS

A. Substitutions: Subject to compliance with requirements, available manufacturers with minimum five years' experience in manufacture of similar products in successful use in similar applications.

B. Approval of Comparable Products: Submit the following in accordance with project substitution requirements, within time allowed for substitution review:
   1. Product data, including certified independent test data indicating compliance with requirements.

2. Samples of each component.
3. Sample submittal from similar project.
4. Project references: Minimum of five installations not less than five years old, with Owner and Architect contact information.
5. Sample warranty.

2.3 ACCESSORIES

A. Provide the following accessories:
    1. Taping of weather barrier seams is required. Tape seams with HydroFlash® UV+ 2.3" Sealing Tape or other compatible product as specified by the manufacturer must be used.
        a. HydroFlash® UV+ Characteristics:
            i. Description: specially-formulated black self-adhered flashing for InvisiWrap™ UV Housewrap.
            ii. Material: black polypropylene nonwoven with acrylic adhesive.
            iii. Width: 2.3 inches (60mm)
            iv. Length: 82 feet (25 m)
            v. Thickness: 16 mil (406.4 microns)
        b. Material Standard: 2.3 inch or wider seam tape
        c. Manufacturer: Acceptable to manufacturer of InvisiWrap™ UV Housewrap Benjamin Obdyke.
    2. Flashing: HydroFlash® UV+ Self-Adhered Flashing
        a. HydroFlash® UV+ Self-Adhered Flashing Characteristics:
            i. Description: specially-formulated black self-adhered flashing for InvisiWrap™ UV Housewrap.
            ii. Material: polypropylene nonwoven with acrylic adhesive.
            iii. Width:4; 6; 9 inches (100mm; 150mm; 229mm)
            iv. Length: 82 feet (25 m)
            v. Thickness: 16 mil (406.4 microns)
        b. Material Standard: Acrylic adhesive must be approved by Benjamin Obdyke for use with InvisiWrap™ UV Housewrap per installation instructions.
        c. Manufacturer: Acceptable to manufacturer of InvisiWrap™ UV Housewrap Benjamin Obdyke.
    3. Sill Flashing: Benjamin Obdyke HydroCorner™ rigid sill corner flashing.
    4. Fasteners:
        a. Acceptable to manufacturer of InvisiWrap™ UV Housewrap Benjamin Obdyke.
    5. Adhesives/Sealants:
        a. Acceptable to manufacturer of InvisiWrap™ UV Housewrap Benjamin Obdyke.

PART 3 EXECUTION

3.1 MANUFACTURER'S INSTRUCTIONS

A. Comply with the instructions and recommendations of the manufacturer.

3.2 EXAMINATION

A. Site Verification of Conditions:
    1. Verify that site conditions are acceptable for installation of weather barrier.
    2. Do not proceed with installation of weather barrier until unacceptable conditions are corrected.

3.3 INSTALLATION

A. Basic Installation
   1. Unroll InvisiWrap™ UV with black/glossy side facing out.
   2. Fasten weather barrier to sheathing or studs with nails, staples, or cap fasteners. Fasteners should provide a minimum of ½ inch penetration into nail base and be spaced approximately 12-18 inches apart. The weather barrier should be installed shingle lap fashion. Overlap all horizontal seams at least 4 inches, vertical seams at least 6 inches, and corners by 12 inches.
   3. Method of Installation: weather barrier may be installed by wrapping entire building including window and door openings. At each window opening cut an "I" shape into the weather barrier. Fold side flaps into rough opening. Fold up top trapezoid shape and proceed with flashing opening.
   4. Surfaces should be clean and dry. Install HydroFlash® UV+ at sill, corner patches, jamb flashing. Use roller or hand applicator to apply HydroFlash® UV+. Be sure that weather barrier and flashing provide positive drainage. Install window per manufacturer's instructions, and install drip cap and header flashing.
   5. Taping of seams is required. tape seams with HydroFlash® UV+.
   6. Coverage within 365 days is recommended. Do not allow the weather barrier to be exposed to sunlight for more than 365 days prior to application of cladding.

      *Alternatively, the weather barrier can be applied after the windows are installed and flashed. Slip weather barrier under loose sill flashing for proper shingling.

B. Flanged Window Installation
   1. Install Sill Flashing System*.
   2. Apply caulk/sealant at jambs and head.
   3. Install Flanged Window**.
   4. Install Jamb Flashing.
   5. Install Header Flashing.
   6. Fold top flap back down on top of flashed header window flange and tape diagonal cuts.

      *Flash windows and doors according to building code requirements.
      **Install windows, doors and flashing as per manufacturers' installation instructions.

C. Open Joint Cladding Application
   1. InvisiWrap™ UV is for use with openings up to one (1) inches.

D. Special Considerations
   1. Flash other wall penetrations (such as outlets, exhaust vents, etc.) with proper shingling technique to maintain drainage to the exterior.
   2. Tape all tears and holes that may have been inadvertently introduced during the construction process.
   3. When installing InvisiWrap™ UV as the *primary air barrier*:
      i. Tape all seams with HydroFlash® UV+ 2.3" Sealing Tape
      ii. Seal the bottom of the first course to the foundation
      iii. Seal the top of the last course to the sheathing or top plate
      iv. Tape/seal all penetrations and tears
      v. Use cap fasteners
   4. To achieve 25 YEAR PRODUCT AND LABOR LIMITED WARRANTY:
      i. HydroFlash® UV+ and cap-fasteners must be used.
      ii. HydroCorner must be used.

3.4 PROTECTION

A. Protect installed work from damage due to subsequent construction activity on the site.

END OF SECTION - 072500

SECTION 074100 - SHEET METAL ROOFING AND WALL PANELS

PART 1 GENERAL

1.1 SECTION INCLUDES

A. Integral snap-lock metal panel roofing system.

1.2 RELATED SECTIONS

A. Section 053100 - Steel Deck.

B. Section 072100 - Roof and Deck Insulation

C. Section 076200 - Sheet Metal Flashing and Trim

D. Section 077140 - Gutters and Downspouts

E. Section 079200 - Joint Sealers

1.3 REFERENCES

A. ASTM A 653/A 653M - Standard Specification for Steel Sheet, Zinc-Coated (Galvanized) or Zinc-Iron Alloy-Coated (Galvannealed) by the Hot-Dip Process.

B. ASTM A 792/A 792M - Standard Specification for Steel Sheet, 55% Aluminum-Zinc Alloy-Coated by the Hot-Dip Process.

C. ASTM B 209 - Standard Specification for Aluminum and Aluminum-Alloy Sheet and Plate.

D. ASTM D 226 - Standard Specification for Asphalt-Saturated Organic Felt Used in Roofing and Waterproofing.

E. ASTM E 84 - Standard Test for Surface Burning Characteristics of Building Materials.

F. ASTM E 1592 - Standard Test Method for Structural Performance of Sheet Metal Roof and Siding Systems by Uniform Static Air Pressure Difference.

G. ASTM E 1646 - Standard Test Method for Water Penetration of Exterior Metal Roof Panel Systems by Uniform Static Air Pressure Difference.

H. ASTM E 1680 - Standard Test Method for Rate of Air Leakage Through Exterior Metal Roof Panel Systems.

I. UL 580 - Standard for Tests for Uplift Resistance of Roof Assemblies.

J. UL 790 - Standard Test Methods for Fire Tests of Roof Coverings.

K. UL2218: Class 4 Impact Resistance Rating.

L. SMACNA - Architectural Sheet Metal Manual.

M. NRCA - The NRCA Roofing and Waterproofing Manual.

1.4 SUBMITTALS

A. Submit under provisions of Section 01300.

B. Product Data: Manufacturer's product data, standard details, and specifications.

C. Shop Drawings: Prepared specifically for this project; showing dimensions of metal roofing and accessories, fastening details and connections and interface with other products.

D. Selection Samples: For each finish product specified, two complete sets of color chips representing manufacturer's full range of available colors and patterns.

E. Verification Samples: For each finish product specified, two samples, minimum size 6 inches (150 mm) square, representing actual product.

F. Delegated Design Submittal: For metal roof panel assembly indicated to comply with performance requirements and design criteria, including analysis data signed and sealed by the qualified professional engineer responsible for their preparation. The professional engineer is to be licensed in the state where the project is located.

1.5 QUALITY ASSURANCE

A. Installer Qualifications: Certified and approved installer of the sheet metal roofing manufacturer Englert, Inc.

1.6 DELIVERY, STORAGE, AND HANDLING

A. Deliver materials in manufacturer's original, unopened, undamaged containers with identification labels intact.

B. Store materials protected from exposure to harmful environmental conditions and at temperature and humidity conditions recommended by the manufacturer.
   1. Store materials above ground, on skids.
   2. Protect material with waterproof covering and allow sufficient ventilation to prevent condensation buildup or moisture entrapment on the materials.

1.7 WARRANTY

A. Manufacturer's Warranty: Submit, for Owner's acceptance, manufacturer's standard warranty document executed by authorized company official. Provide warranties as follows:
   1. Warranty covering the metal substrate against rupture, perforation and structural failure due to normal atmospheric corrosion. Warranty Period: Twenty Five years from date of Substantial Completion.
   2. Warranty on paint finish against cracking, peeling, blistering, chalk and color change.
   3. Provide PermaColor 3500, 35-year Kynar 500 limited finish warranty.
   4. Provide 25-year warranty for Galvalume against corrosion and perforation.

B. Manufacturer's Weathertightness Warranty:
1. Warranty: Provide the manufacturers limited warranty for workmanship and material covering a period of 20 years from the date of substantial completion.

PART 2 PRODUCTS

2.1 MANUFACTURERS

A. Basis-of-Design Product Manufacturer: Englert, Inc., which is located at: 1200 Amboy Ave. ; Perth Amboy, NJ 08861; Toll Free Tel: 800-364-5378; Tel: 732-826-8614; Fax: 732-826-8865; Email: info@englertinc.com; Web: www.englertinc.com

B. Requests for substitutions will be considered in accordance with provisions of Section 01600.

C. Substitutions:Subject to compliance with requirements, provide comparable product by one of the following:

1. Ryerson Metals

2. AEP Span.

3. Or Approved Equal.

D. Provide all sheet metal roofing and accessories from a single manufacturer.

2.2 COMMERCIAL SYSTEMS

A. Integral Snap-Lock Panels:
1. Profile: Series S2000, 1-3/4 inch (44.45 mm) standing seam.
a. Width:
1) 16 inch (406 mm).
b. Stiffening ribs.
c. Wind Uplift Resistance: UL 580; Class 90.
d. Air Leakage: Passed when tested in accordance with ASTM E 1680.
e. Water Penetration: None, when tested in accordance with ASTM E 1646.
f. Flame Spread: Class 1 when tested in accordance with ASTM E 84.
g. Uniform Static Air Pressure Difference: ASTM E 1592 and ASTM E 330.
h. Dade County Florida Tested: Non-structural roofing systems.
i. Class A Fire Rating, UL-790.
j. Florida Building Code approval.

B. ACCESSORIES

A. Fasteners: As recommended by panel manufacturer for the system specified.

B. Sealant: Sealant as recommended by panel manufacturer.

C. Flashings and Trim: As recommended by panel manufacturer.

1.2 MATERIALS

A. Galvalume: ASTM A 792/A792M, AZ50, aluminum-zinc alloy coating.
1. Base metal: Structural quality, 50ksi yield point, 52 ksi tensile strength.
2. Thickness:
a. 24 gauge.
3. Finish:
a. Permacolor 3500: Kynar 500 coating, 0.8 to 0.9 mil (0.020 to 0.023 mm) fluorocarbon full strength 70 percent Kynar 500 finish coating over 0.2 to 0.3 mil (0.005 to 0.007 mm) urethane primer.
4. Color:
a. As selected by the Architect from manufacturer's full range.

PART 2 EXECUTION

2.1 EXAMINATION.

A. Examine surfaces to receive sheet metal roofing. Notify the Architect in writing of any defective conditions encountered. Starting of work shall constitute acceptance of such conditions.

B. Wood and Metal Substrate:
1. Inspect roof deck to verify substrate is clean and smooth, free of depressions, waves, or projections, and properly sloped.
2. Verify substrate is dry and joints are solidly supported and fastened.
3. Verify wood nailers are installed and correctly located.

C. Structural Framing Substrate:
1. Verify primary and secondary framing members are installed and fastened, properly aligned and sloped.
2. Verify damaged shop coatings are repaired with touch up paint.

D. Verify roof openings, curbs, pipes, sleeves, ducts, or vents through roof are solidly set, reglets are in place, and nailing strips located.

E. Correct defective conditions before beginning work.

2.2 INSTALLATION

A. Install in conformance with the NRCA Roofing and Waterproofing Manual and manufacturers installation instructions and recommendations.

B. Form panel shape as indicated on Drawings, accurate in size, square, and free from distortion or defects.

C. Install base sheet and eave protection sheet underlayment as recommended by the manufacturer.

D. Install all panels continuous from ridge to eave. Transverse seams are not permitted.

E. Where not otherwise indicated conform to SMACNA details including flashings and trim.

F. Install sealants where indicated to clean dry surfaces only without skips or voids..

2.3 PROTECTION

A. Protect installed products until completion of project.

B. Touch-up, repair or replace damaged products before Substantial Completion.

END OF SECTION - 074100

SECTION 074113 - SHEET METAL SOFFIT

PART 1 GENERAL

1.1 SECTION INCLUDES

A. Metal soffit and fascia panels.

1.2 RELATED SECTIONS

A. Section 076200 - Sheet Metal Flashing and Trim

B. Section 077140 - Gutters and Downspouts

C. Section 079200- Joint Sealers.

1.3 REFERENCES

A. ASTM A 653/A 653M - Standard Specification for Steel Sheet, Zinc-Coated (Galvanized) or Zinc-Iron Alloy-Coated (Galvannealed) by the Hot-Dip Process.

B. ASTM A 792/A 792M - Standard Specification for Steel Sheet, 55% Aluminum-Zinc Alloy-Coated by the Hot-Dip Process.

C. ASTM B 209 - Standard Specification for Aluminum and Aluminum-Alloy Sheet and Plate.

D. ASTM E 84 - Standard Test for Surface Burning Characteristics of Building Materials.

E. ASTM E 1646 - Standard Test Method for Water Penetration of Exterior Metal Roof Panel Systems by Uniform Static Air Pressure Difference.

F. ASTM E 1680 - Standard Test Method for Rate of Air Leakage Through Exterior Metal Roof Panel Systems.

G. UL 580 - Standard for Tests for Uplift Resistance of Roof Assemblies.

H. UL 790 - Standard Test Methods for Fire Tests of Roof Coverings.

I. UL2218: Class 4 Impact Resistance Rating.

J. SMACNA - Architectural Sheet Metal Manual.

1.4 SUBMITTALS

A. Submit under provisions of Section 01300.

B. Product Data: Manufacturer's product data, standard details, and specifications.

C. Shop Drawings: Prepared specifically for this project; showing dimensions of metal roofing and accessories, fastening details and connections and

interface with other products.

D. Selection Samples: For each finish product specified, two complete sets of color chips representing manufacturer's full range of available colors and patterns.

E. Verification Samples: For each finish product specified, two samples, minimum size 6 inches (150 mm) square, representing actual product.

F. Delegated Design Submittal: For metal roof panel assembly indicated to comply with performance requirements and design criteria, including analysis data signed and sealed by the qualified professional engineer responsible for their preparation. The professional engineer is to be licensed in the state where the project is located.

1.5 QUALITY ASSURANCE

A. Installer Qualifications: Certified and approved installer of the sheet metal roofing manufacturer Englert, Inc.

1.6 DELIVERY, STORAGE, AND HANDLING

A. Deliver materials in manufacturer's original, unopened, undamaged containers with identification labels intact.

B. Store materials protected from exposure to harmful environmental conditions and at temperature and humidity conditions recommended by the manufacturer.
   1. Store materials above ground, on skids.
   2. Protect material with waterproof covering and allow sufficient ventilation to prevent condensation buildup or moisture entrapment on the materials.

1.7 WARRANTY

A. Manufacturer's Warranty: Submit, for Owner's acceptance, manufacturer's standard warranty document executed by authorized company official. Provide warranties as follows:
   1. Warranty covering the metal substrate against rupture, perforation and structural failure due to normal atmospheric corrosion. Twenty Five years from date of Substantial Completion.
   2. Warranty on paint finish against cracking, peeling, blistering, chalk and color change.
   3. Provide PermaColor 3500, 35-year Kynar 500 limited finish warranty.
   4. Provide 25-year warranty for Galvalume against corrosion and perforation.

PART 2 PRODUCTS

2.1 MANUFACTURERS

A. Basis-of-Design Product Manufacturer: Englert, Inc., which is located at: 1200

Amboy Ave. ; Perth Amboy, NJ 08861; Toll Free Tel: 800-364-5378; Tel: 732-826-8614; Fax: 732-826-8865; Email: info@englertinc.com; Web: www.englertinc.com

B. Requests for substitutions will be considered in accordance with provisions of Section 01600.

C. Substitutions:Subject to compliance with requirements, provide comparable product by one of the following:

1. Ryerson Metals

2. AEP Span.

3. Or Approved Equal.

D. Provide all sheet metal roofing and accessories from a single manufacturer.

2.2 COMMERCIAL SYSTEMS

A. Soffit Panels:
1. Profile: Series B4000, 1" (25.4.45 mm) Flush Seam.
   a. Width:
      1) 12 inch (406 mm).
   b. Stiffening ribs as recommended by the manufacturer.
   c. Wind Uplift Resistance: UL 580; Class 90.
   d. Air Leakage: Passed when tested in accordance with ASTM E 1680.
   e. Water Penetration: None, when tested in accordance with ASTM E 1646.
   f. Flame Spread: Class 1 when tested in accordance with ASTM E 84.
   g. Uniform Static Air Pressure Difference: ASTM E 1592 and ASTM E 330.
   h. Class A Fire Rating, UL-790.
   i. Florida Building Code approval.

B. ACCESSORIES

A. Fasteners: As recommended by panel manufacturer for the system specified.

B. Sealant: Sealant as recommended by panel manufacturer.

C. Flashings and Trim: As recommended by panel manufacturer.

2.3 MATERIALS

D. Galvalume: ASTM A 792/A792M, AZ50, aluminum-zinc alloy coating.
1. Base metal: Structural quality, 50ksi yield point, 52 ksi tensile strength.
2. Thickness:
   a. 24 gauge.
3. Finish:
   a. Permacolor 3500: Kynar 500 coating, 0.8 to 0.9 mil (0.020 to 0.023 mm) fluorocarbon full strength 70 percent Kynar 500 finish

coating over 0.2 to 0.3 mil (0.005 to 0.007 mm) urethane primer.

4. Color:
   a. As selected by the Architect from manufacturer's full range.

PART 3 EXECUTION

3.1 EXAMINATION。

E. Examine surfaces to receive sheet metal panels. Notify the Architect in writing of any defective conditions encountered. Starting of work shall constitute acceptance of such conditions.

F. Wood and Metal Substrate:
   1. Inspect all substrate to verify surface is clean and smooth, free of depressions, waves, or projections, and properly sloped.
   2. Verify substrate is dry and joints are solidly supported and fastened.
   3. Verify wood nailers are installed and correctly located.

G. Structural Framing Substrate:
   1. Verify primary and secondary framing members are installed and fastened, properly aligned and sloped.
   2. Verify damaged shop coatings are repaired with touch up paint.

H. Verify any openings, pipes, sleeves, ducts, or vents through wall are solidly set, reglets are in place, and nailing strips located.

I. Correct defective conditions before beginning work.

3.2 INSTALLATION

J. Install in conformance with the NRCA Roofing and Waterproofing Manual and manufacturers installation instructions and recommendations.

K. Form panel shape as indicated on Drawings, accurate in size, square, and free from distortion or defects.

L. Install base sheet underlayment as recommended by the manufacturer.

M. Where not otherwise indicated conform to SMACNA details including flashings and trim.

N. Install sealants where indicated to clean dry surfaces only without skips or voids..

3.3 PROTECTION

O. Protect installed products until completion of project.

P. Touch-up, repair or replace damaged products before Substantial Completion.

END OF SECTION - 074113

SECTION 074243 - EXTERIOR WALL SIDING SYSTEM

PART 1 - GENERAL

1.1 RELATED DOCUMENTS

Drawings and general provisions of the Contract, including General and Supplementary Conditions and Division 1 Specification Sections, apply to this Section.

A. Supplementary components and accessories necessary for complete fabrication and installation whether or not such items are indicated on the Drawings or included in the Specifications.

1.2 SUMMARY

A. This Section includes HIGH PRESSURE LAMINATE PHENOLIC WALL PANEL.

1.3 ADMINISTRATIVE REQUIREMENTS

A. Coordination: Coordinate panel installation with the work of related trades to ensure that supporting construction conforms to the fabricator's tolerance requirements; and that necessary rough-in work, backings, and anchorage are properly installed. Deliver backing and embedment, templates, and installation instructions to related trades before affected work begins.

B. Delegated Design Requirements:

1. System Description: Drawings of wall siding systems are diagrammatic and show design intent of finished profiles, shapes and forms; relationships between ele1nents; location, identification, dimension and size of components, assemblies and accessories; and details and diagrams of connections.

2. Engineer, fabricate, assemble, and install wall siding systems and supporting framing assemblies to meet or exceed the specified performance criteria; conform to the profiles indicated and to other requirements of the Contract Documents; satisfy the requirements and provide structurally sound, assemblies that accommodate, resist, distribute, or transfer, as applicable, the minimum specified in-service loads and thermal, seismic, wind sway, and other types of movement without incipient or catastrophic failure.

3. Maintain the visual design concept indicated, including member sizes, profiles, and alignment of components. Deviation from the visual design concept indicated is not permitted without prior written authorization from the Architect.

1.4 PERFORMANCE REQUIREMENTS AS SPECIFIED IN THIS SECTION.

A. Sequencing:

1. Before starting related work, furnish related trades with location shop drawings, setting diagrams, templates, and manufacturer's installation instructions.

2. Provide backings, embeds, loose connection hardware, anchorage, and similar items to related trades at appropriate times during the Work.

3. Control of Corrosion: Prevent galvanic action and other forms of corrosion by installing metals and other materials from direct contact with incompatible materials.

1.5 SUBMITTALS

A. Action Submittals:

1. Product Data: Submit a comprehensive list of all items necessary for complete fabrication and installation, along with the fabricator's product data, specifications, typical installation details, and other data necessary to demonstrate each item's conformance to the specified requirements.

2. Include copies of product data for items installed as part of the work of this Section, but specified in other Sections.

3. Shop Drawings: Submit scale dimensioned drawings showing panel layout, geometry, materials, joints, profiles, edge conditions, attachments to other work, and finishes.

4. Shop Drawings shall also serve as field installation drawings and be complete with specific instructions includes typical details for the application of panels, sub-frame assemblies, etc., to insure proper installation.

5. Label individual components with the manufacturer's product name. Indicate material thickness and methods of field installation.

6. Include elevation drawings of each vertical surface in which panels are installed. All such drawings must show the horizontal and vertical location and sizes of all panel units installed in each surface.

7. Include project-specific, at least 1/4-inch scale dimensioned detail drawings showing profiles, shapes, and dimensions, including conditions either not detailed on the product data, or that are detailed on the product data, but in a manner that is not specific to the Project. Furnish edge details where specified items abut adjacent items.

8. Indicate methods of attaching to adjacent supporting construction.

9. Show fasteners, brackets, clips, adhesives, mounting devices, and similar attachments to other work.

10. Label each attachment type the manufacturer's product name;

11. Indicate base material and finish, fastener or adhesive material and finish, and material and finish of items being fastened or attached.

12. Samples: Submit four each approximately 3 1/2-inch square samples of each type of finish indicated demonstrating the specified finishes, colors, and textures.

B. Informational Submittals:

1. Delegated Design Submittals: Submit engineering calculations demonstrating conformance to the requirements of the Contract Documents.

2. Calculations must be legible; must incorporate sufficient cross-references to the shop drawings to make the calculation readily understandable and reviewable; and must include,

    a. design loads;

    b. analysis of framing members, including section –property Computations;

    c. analysis of anchors; and

    d. the signature and seal of the licensed professional responsible for preparing them.

    e. Test reports are not an acceptable substitute for calculations.

C. Closeout Submittals:

1. Maintenance Data: Upon completion of the Work, submit to the Owner a copy of the manufacturer's recommendations for maintenance, including:

    a. recommendations for care, repair, restoration, adjusting, cleaning, protection, maintenance, and troubleshooting;

    b. recommendations for periodic inspections and identification of common causes of damage;

    c. recommendations for cleaning and refinishing panel assemblies, and warnings against using materials and methods that may be detrimental to panel assembly quality, durability, appearance, and performance;

    d. instructions for both permanent repair and temporary repair and patching until permanent repair can be made.

D. Warranty

1. Special Manufacturer's Warranty: Written warranty, signed by exterior Wall Panel Systems Inc. and panel manufacturer agreeing to replace materials that do not comply with requirements or that do not remain watertight during specified warranty period. Warranty Period: Ten years after date of Substantial Completion.

2. Special Installer's Warranty: Written waterproofing Installer's warranty, signed by Installer, covering Work of this Section, for warranty period of two years.

I. Regulatory Requirements

1. Surface Burning Requirements: The panels to have the following surface burning characteristics and smoke generation values per U.L Classification and labeling in accordance with ASTM E-84 tests.

    a. Flame spread: 25 or less; Class A.

    b. Smoke developed: 75 or less.

PART 2 - PRODUCTS

2.1 MANUFACTURERS

A. Basis of Design Product: is based on material for exterior wall siding systems – WPS Horizontal Flush Siding manufactured by Wall Panel Systems, Inc. and all panel fabrication, siding clips, and subframe or optional trim components.

   Local Representative: Renaissance Building Products, Bob Cangemi- 908-832-6040

B Other acceptable manufacturers with comparable products include the following:

   1. Approved equals

2.2 SUB-FRAME ASSEMBLY

A. Aluminum sub-frame profiles to be supplied by WALL PANEL SYSTEMS, INC.

B. Fasteners for panel assembly to be supplied by WALL PANEL SYSTEMS, INC.

C. Items must conform to the following.

   1. Sub-Frame and Surround Finish: Black Anodized Aluminum.

   2. All outside corners to be mitered or as shown on dwgs

2.3 MATERIALS

A. Panel: Trespa Meteon Wood Decor Panels with WPS Horizontal Flush Siding System. Comply with the following:

   1. Panel Thickness: 5/16".

   2. Color: Provide colors selected by Architect from manufacturer's standard color pallet.

   3. Finish: Wood grain as selected by Architect.

B. Water Barrier: Provide one of the following as determined by Architect:

   1. Refer to specification section 072500-Weather Barriers.

2.4 FABRICATION

A. All panel-exposed edges shall be WPS Siding Detail, with an eased edge.

2.5 SOURCE QUALITY CONTROL

A. Panels shall be of material specifically designed for exterior wall siding. Fabricated work surfaces shall comply with all current codes and regulations. Panels shall have uniform thickness (+0.03") for a 10-foot span, and flatness (maximum difference of 0.08") for 3-foot span.

B. Panels to be U.L registered and labeled for quality consistency.

C. Source Limitations: Obtain each panel type and accessory through one source from a single manufacturer.

D. Qualifications:

1. Manufacturer: Must be a legal business entity with at least 5 consecutive years' experience manufacturing exterior façade panel's for applications similar in material, design, complexity, and extent to this Project, and whose products have resulted in applications with a record of successful in-service performance.

2. Installer: Must be a company and individuals with at least 5 consecutive years' experience in the installation of siding systems on projects similar in material, design, complexity, and extent to this Project that have resulted in applications with a documented record of successful in-service performance on at least 3 projects similar in size and scope to this Project, as determined by the Architect.

3. Before starting work, including bulk purchase and delivery of products, prepare a field sample in a manner approved by the Architect to demonstrate the expected final visual effect of the planned installation.

2.6 HANDLING

A. Packaging Requirements: Each delivery must include with it a copy of fabricator-prepared instructions for the proper storage, handling, mixing, installation and protection of each product delivered.

B. Delivery and Acceptance Requirements:

1. Delivery:

a. Deliver items to the Project site in conformance with the fabricator's requirements, recommendations, or instructions for transport and delivery.

b. Provide adequate dunnage and bracing during transport and delivery. Support items on non-staining, shock-absorbing material.

c. During transport and delivery, protect items from (1) prolonged exposure to UV radiation in excess of the fabricator's recommended limits; (2) exposure to weather; (3) becoming wet; and (4) other sources of deterioration or damage.

2. Acceptance at the Site:

a. Inspect for damage all items delivered to the Project site.

b. Reject the delivery of items that show damage or have damaged containers.

c. With a minimum of handling, unload and store only undamaged items.

C. Storage Requirements:

1. Store items as shipped, upright in their original shipping containers, and in conformance with the fabricator's requirements, recommendations, or instructions for storage. Provide adequate dunnage and bracing during storage.

2. Store items off the floor or ground on pallets, and protect against weather, precipitation, and other forms of moisture with breathable covers. Un-vented polyethylene tarpaulins may not be used.

    a. Incline stored items to provide maximum drainage of accumulated moisture.

    b. Provide spacers to separate stored items and allow air to circulate around all surfaces.

    c. Protect stored items to prevent contact with the ground, to prevent staining, and to prevent cracking, distortion, warping, and other physical damage.

    d. Do not leave items uncovered where they may be exposed to rain, mist, high relative humidity, condensation, frost, or other sources of moisture, or to ultraviolet radiation in excess of the fabricator's recommended exposure limits.

    e. Store materials and place equipment in a manner to avoid permanent deflection of floor or roof decks.

D. Damaged Item Replacement Requirements: Promptly remove, dispose of, and replace, or arrange and pay costs for the removal, disposal, and replacement of items that become deteriorated, contaminated, or otherwise damaged.

1. Remove and dispose of damaged items at a disposal location away from the Project site.

2. Replace removed items with undamaged new items.

E. Existing Conditions:

1. Field-verify measurements before preparing submittals and indicate those field measurements on the shop drawings.

2. If field measurements cannot be made without delaying the Work, establish working dimensions that accommodate installation tolerances, as well as related tolerances specified for the Work of other sections, and indicate those working dimensions on the shop drawings.

3. Coordinate the installation of adjacent work to ensure the actual dimensions accommodate the previously established working dimensions

4. Ventilation: Comply with the manufacturer's recommendations for providing adequate ventilation during and after application and curing, setting, or drying. Where natural ventilation is inadequate, provide forced-air circulation or other mechanical ventilation.

PART 3 - EXECUTION

3.1 INSPECTION

A. Verification of Conditions: Examine site conditions and field-verify measurements affecting the work of this Section.

1. Examine supporting construction and conditions for conformance to the specified requirements for installation tolerances, true and level bearing surfaces, and other conditions under which panels are applied.
2. Verify that panels are free of edge damage or face imperfections.

B. Evaluation and Assessment:

1. Reject work that does not conform to the manufacturer's application requirements. The Contractor shall either perform or arrange and pay all costs for remedial work necessary to correct or improve deficient conditions and to conform to the manufacturer's application requirements.
2. Proceeding with application stipulates the Applicator's acceptance of existing conditions. After starting work, the Applicator shall perform remedial work necessary to correct or improve deficient conditions and to conform to the manufacturer's application requirements.

3.2 PREPARATION

A. Protection of In-Place Conditions:

1. Work Area Protection: Protect work areas from excessive dust and other airborne contaminants during surface preparation, flooring application, and while flooring is curing, setting, or drying.
2. Adjacent Material Protection: Protect adjacent surfaces not indicated as receiving flooring from staining, overspray, and damage. Provide drop cloths, shields, masking, barricades and other protection necessary to provide adequate protection against adjacent surfaces becoming damaged

B. Surface Preparation:

1. Prepare substrates in conformance with the manufacturer's installation instructions to achieve a smooth, dry, clean surface free of flaking, unsound coatings, cracks, and defects.
2. Remove substrate coatings and other substances that are incompatible with adhesives or that may negatively affect the quality of the installation, durability, appearance, or performance the furnished wall cladding.

3.3 INSTALLATION

A. Install water barrier as recommended by manufacturer to provide complete water infiltration barrier preventing migration of water to building interior.

B. Install aluminum sub-frame, fasteners and panels for façade wall panel system as per approved shop drawings.

C. The installation of the girt/support and anchoring systems shall be true and plumb in order to provide support for the wall panels.

D. Install aluminum brackets to the structural wall prior to installation of insulation, if insulation is required.

E. Installed siding panels shall have open joints of (1/8") inch. Exact sizes and dimensions to be coordinated with the drawings, field conditions, and approved shop drawings.

F. The vertical joints to be 1/8".

G. The horizontal joints are to be follow manufacture recommendations.

H. Outside comers to be detailed in shop drawings.

J. Opening between bottom of siding and the structural wall shall be covered by ventilation profile to prevent animals or other objects from being hidden behind the panels. The perforation grate needs to meet the openings per area of 2.36 square inch / foot.

K. Verification of Conditions: Examine site conditions and field-verify measurements affecting the work of this Section.

   1. Examine supporting construction and conditions for conformance to the specified requirements for installation tolerances, true and level bearing surfaces, and other conditions under which panels are applied.

   2. Verify that panels are free of edge damage or face imperfections.

L. Evaluation and Assessment:

   1. Reject work that does not conform to the manufacturer's application requirements. The Contractor shall either perform or arrange and pay all costs for remedial work necessary to correct or improve deficient conditions and to conform to the manufacturer's application requirements.

   2. Proceeding with application stipulates the Applicator's acceptance of existing conditions. After starting work, the Applicator shall perform remedial work necessary to correct or improve deficient conditions and to conform to the manufacturer's application requirements.

3.4 PREPARATION

A. Protection of In-Place Conditions:

B. Work Area Protection: Protect work areas from excessive dust and other airborne conta1ninants during surface preparation, flooring application, and while flooring is curing, setting, or drying.

C. Adjacent Material Protection: Protect adjacent surfaces not indicated as receiving flooring from staining, overspray, and damage. Provide drop cloths, shields, masking, barricades and other protection necessary to provide adequate protection against adjacent surfaces becoming damaged

D. Surface Preparation:

E. Prepare substrates in conformance with the manufacturer's installation instructions to achieve a smooth, dry, clean surface free of flaking, unsound coatings, cracks, and defects.

F. Remove substrate coatings and other substances that are incompatible with adhesives or that may negatively affect the quality of the installation, durability, appearance, or performance the furnished wall cladding.

3.5 DAMAGED MATERIAL

A. Repair or replace all damaged material to the satisfaction of the Architect.

3.6 CLEANING

A. The use of abrasive cleaners or cleaning tools is prohibited.

B. Provide a dry wipe down cleaning of all work as it is erected and prior to moving to the next portion or area.

3.7 PROTECTION

A. After installation, protect the wall panel system from damage. The panels shall be kept free from paint, plaster, cement scratches, or any other destructive forces.

END OF SECTION 074243

SECTION 077104 - MANUFACTURED GUTTERS AND DOWNSPOUTS

PART 1 - GENERAL

1.01 RELATED DOCUMENTS

A. The provisions included under Division 1, General Requirements, are included as part of this section as though bound herein.

1.02 SUMMARY

A. Provide labor, material, and equipment necessary for furnishing a complete installation of commercial gutter system.

B. Related Work Specified Elsewhere

1. Division 5 Sections for support framing.

2. Division 6 Sections for nailers and support framing.

3. Division 7 Sections for related roofing materials.

1.03 SUBMITTALS

A. Product Data: Each type of product specified. Submit manufacturer's detailed technical product data, installation instructions and recommendations, dimensions of individual components, profiles, and finishes.

B. Shop Drawings: Show fabrication and installation of commercial gutter system including fully dimensioned roof plans, expansion joint locations, sections and details of components and other related trims.

C. Finish & Color Selection: Furnish manufacturer's technical data for specified finish and color chart showing full range of colors available.

1.04 QUALITY ASSURANCE

A. Where pre-engineered manufactured products are specified, other field fabricated or shop/field fabricated substitutions will not be accepted. However, where shop/field fabrications are indicated pre-engineered systems will be considered with Architect approval.

B. Obtain all components and related accessories from one single source manufacturer.

C. Follow primary roofing manufacturer's printed instructions for installing associated roof material for flashing gutter system to roof.

1.05 DELIVERY, STORAGE & HANDLING

A. All products delivered shall be stored in a clean dry location prior to installation.

B. Products furnished with strippable protective masking shall not be exposed to direct sunlight for more than 30 minutes without removing masking.

C. Do not install finished materials with scars or abrasions.

1.06 PROJECT CONDITIONS

A. Coordinate work of this Section with adjoining work for proper sequencing to ensure protection from inclement weather and to protect materials and their finish against damage.

B. Do not install commercial gutter system during inclement weather. When installing in cold climates, warm adhesives, caulks, and primers to at least 50 degrees Fahrenheit prior to application.

PART 2 PRODUCTS

2.01 MANUFACTURERS

A. Provide commercial gutter system, accessories, and drainage as specified and shown on drawings.

2.02 TYPE

A. Provide commercial gutter system to style and size as indicated on Drawings.

2.03 MATERIALS & FABRICATION

A. Gutter: Shall be manufactured from 0.032" Kynar 500 finished aluminum in +/- 15'-0" lengths. Gutter shall be:

B. Support Bracket: Shall be manufactured from 0.125" x 1.00" aluminum, factory punched for fasteners. Support brackets shall be wrapped with matching .032 aluminum cover strip

C. Interior Straps: Shall be manufactured from 16 GA Galvanized Steel x 1.00" aluminum.

2.04 ACCESSORIES

A. Mitered Corners: N/A

B. End Caps: Provide factory end caps at all gutter ends and wall abutments.

C. Liner Expansion Joint: Provide elastomeric expansion joints with cover plates at no greater than 40' intervals or as shown on shop drawings.

D. Sealant: Shall be polyurethane or silicon based water-proofing type, compatible with aluminum gutter, downspout, and abutting dissimilar materials for intended application.

2.05 DRAINWARE

A. Downspout & Elbows: Provide downspout in sizes and locations as indicated on plans. Downspouts shall be manufactured from 0.032 aluminum, finished to match gutter. Downspout elbows shall have toggle lock joints.

B. Outlets: At all downspout locations provide aluminum outlets to connect gutter to downspout.

C. Wall Brackets: Provide Wall brackets at 60" maximum spacing (minimum 2 brackets). Brackets shall be manufactured from 0.125" x 1.00" aluminum, .032 cover cap finished to match downspout.

2.06 FINISHES

A. General: Apply coatings to exposed aluminum components after fabrication for maximum coating performance and to prevent crazing, abrasion, and damage to finished surfaces.

B. Pretreatment: Aluminum components shall be pretreated with solutions to remove organic and inorganic surface soils, remove residual oxides, followed by a chrome phosphate conversion coating to which organic coatings will firmly adhere.

C. Coating Type: High Performance Coating, two-coat, shop applied, 70% Polyvinylidene Fluoride (PVDF) coating based on PPG Inudstries. Kynar 500 meeting AAMA 2605 specification.

D. Color: From Manufacturer's standard offering.

PART 3 EXECUTION

3.01 EXAMINATION

A. The installer must examine substrates and conditions under which commercial gutter system will be installed. All wood plates and/or fascia boards shall be installed true, straight, and free of splits, cracks, or other irregularities. Do not proceed with installation until unsatisfactory conditions are corrected.

3.02 PREPARATION

A. Prior to the installation of the commercial gutter system, soffits, extenders, and associated cornice profiles shall be installed.

B. Installer shall thoroughly read and follow manufacturer's installation instructions before proceeding with installation.

3.03 INSTALLATION

A. General: The commercial gutter system shall be installed in strict accordance with manufacturer's printed instructions. Deviations from the instructions are not allowed.

B. Support Brackets: Layout support brackets to provide 1/2" slope in 40 linear feet. Install support brackets with #10 x 2" stainless steel wood screws.

C. Gutter: Install gutter onto support brackets and fasten to substrates with 1-1/2" aluminum or stainless steel nails. Rivet and seal liner joints with high grade exterior sealant as recommended by gutter manufacturer.

D. Expansion Joints: Install elastomeric expansion joints as shown on plans and/or shop drawings. Maximum expansion joint spacing shall be 40' centers.

E. Install interior straps by fully engaging them into gutter's hemmed edge, complete by securely riveting.

END OF SECTION 077104

SECTION 078400 – FIRE-STOPPING

PART 1 - GENERAL

1.1 RELATED DOCUMENTS

A. This Section shall be used in conjunction with the following other specifications and related Contract Documents to establish the total general requirements for the project communications systems and equipment:

1. Contract Documents
2. Section 270526 – Grounding and Bonding
3. Section 270528 – Pathways for Communications Systems
4. Section 271000 – Structured Cabling General Requirements
5. Section 271500 – Communications Horizontal Cabling
6. Section 271600 – Communications Connecting Cords, Devices and Adapters
7. Section 272000 – Data Communications
8. Section 272133 -– Wireless Data Communications
9. Section 280000 – Electronic Safety and Security

1.2 DESCRIPTION

A. This Section describes the requirements for furnishing and installing fire stopping for fire-rated construction. This includes:

1. All openings in fire-rated floor and wall assemblies, both blank (empty) and those accommodating penetrating items such as cable conduits, pipes, ducts, etc.
2. Gaps (openings) between exterior curtain walls and the outer perimeter edge of structural floor.
3. Openings at each floor level in shafts or stairwells.
4. Joints in rated walls and floors between similar and dissimilar construction materials.

1.3 QUALITY ASSURANCE

A. Fire stopping materials shall conform to Flame (F) and Temperature (T) ratings as required by applicable building codes and tested by nationally accepted test agencies per ASTM E 814 or UL 1479 fire tests for through penetrations, and ASTM E 1966 or UL 2079 for construction joints, and UL 2307 for perimeter edge joints.

B. Fire stopping material shall be free of asbestos, PCBs, ethylene glycol, and lead.

C. Do not use any product containing solvents or that requires hazardous waste disposal.

D. Fire stopping shall be performed by a General Contractor trained or approved by fire stop manufacturer.

E. All fire stopping material shall be from a single manufacturer.

F. Equipment installation shall be in accordance with fire stop manufacturer's written installation instructions.

G. Fire stopping shall be inspected by a third-party independent inspection service and a report furnished to the architect or owners' representative during all phases of construction. Should defects be discovered, subsequent inspections will be at the cost of the General Contractor.

H. Single Source Responsibility: Provide fire stop systems for all conditions from a single manufacturer.

I. Fire stop manufacture will provide written documentation from Underwriters Laboratories that fire stop material has passed UL accelerated aging and environmental exposure test for UL 1479/ASTM E 814 test standards for fire stopping material.

J. Fire stop materials must have a minimum shelf life of 2 years from production and visible expiration or packaging date.

K. Fire stop systems for Smoke Barriers (Section 709) must have L- rating of < 5cfm/lf(cf).

L. Fire stop material must have manufacturer published application temperature range of 35°F to 120°F, and material to still be useable after being frozen and thawed.

1.4 SUBMITTALS

A. Submit manufacturer's product literature for each type of fire stop material to be installed. Literature shall indicate product characteristics, typical uses, performance and limitation criteria, and test data.

B. Material safety data sheets (MSDS): Submit MSDS for each fire stop product.

C. Submit manufacturer's installation procedures for each type of product.

D. Submit manufacturer's Warranty. If Manufacturer's states that the Owner or user shall determine the suitability of the product for its intended use, or Warranty states that that the Owner or user shall test application for specific use, then the General Contractor shall have independently monitored tests performed on the construction configurations identical to the proposed construction on this project, and General Contractor shall submit copies of Test Reports covering same, for review by the Architect.

1.5 PRODUCT DELIVERY, STORAGE, AND HANDLING

A. Delivery material in the manufacturer's original, unopened containers or packages with manufacturers' name, product identification, lot numbers, UL-labels, and mixing and installation instructions, as applicable.

B. Store materials in the original, unopened containers or packages, and under conditions recommended by manufacturers.

C. All Fire stop materials shall be installed prior to material expiration date.

1.6 PROJECT CONDITIONS

A. Conform to Manufacturer's printed instructions for installation and when applicable, curing in accordance with temperature and humidity. Conform to ventilation and safety requirements.

1.7 WARRANTY

A. Fire stop installer shall warrant that fire stopping systems used meet fire stopping requirements as herein specified up to and including sustainable life of the building. Limitations contained in the manufacturer's warranty do not release the installing General Contractor from providing the warranties required by the contract documents.

B. Fire stop manufacturer must provide a written warranty statement that fire stop material will perform as tested in properly installed fire stop systems for the sustainable life of the building, a no time limit warranty.

1.8 SEQUENCING

A. Coordinate this work as required with work of other trades.

B. Include fire stopping into the general/project schedule.

C. Fire stopping shall precede gypsum board finishing.

D. The project construction schedule must contain fire stopping installation timelines coordinated with trades.

1.9 PROTECTION

A. Where fire stopping is installed at locations which will remain exposed in the completed work, provide protection as necessary to prevent damage to adjacent surfaces and finishes, and protect as necessary against damage from other construction activities.

PART 2 - GENERAL

2.1 GENERAL

A. Fire stopping shall meet the specified requirements.

B. Fire stop material must be manufactured in the United States of America.

2.2 FIRE STOPPING

A. Acceptable Manufacturers:

1. Bio Fireshield™ (whose products are listed as a standard)
2. RectorSeal®
3. Metacaulk®
4. FlameSafe®
5. Or Architect approved equal.

B. Fire stop Mortars:

1. K-10+™ Fire stop Mortar
2. Metacaulk□ Mortar
3. Rectorseal Fire stop Mortar
4. FlameSafe® FSM 22 Mortar Seal
5. Or Architect approved equal.

C. Fire stop Sealants and Caulks:

1. Bio Fireshield™ Biotherm™100 Fire stop Sealants
2. Bio Fireshield™Biostop™500+, 750, and BF150+ Intumescent Fire stop Caulk
3. Metacaulk® 950, 835+, 1000, 1200, MC150+ Intumescent Fire stop Caulks
4. Rectorseal Intumescent Fire stop Caulks
5. FlameSafe® FS 4000 Silicone Sealant, FS 1900, FS 900
6. Or Architect approved equal.

D. Fire stop Putty:

1. Metacaulk® Putty & Putty Pads
2. Bio Fireshield™ BIOSTOP™ Moldable Putty & Putty Pads
3. Rectorseal Putty & Putty Pads
4. FlameSafe® FSP 1000 Putty, 1077 Putty Pads
5. Or Architect approved equal.

E. Fire stop Collars:

1. BIOSTOP® Plastic Pipe Collar
2. Metacaulk® Plastic Pipe Collar
3. Rectorseal Plastic Pipe Collar
4. FlameSafe® Fire stop Device, Intumescent Sleeve, Intumescent Collar
5. Or Architect approved equal.

F. Intumescent Fire Retardant Fire stop Mastic - Spray, Brush, or Trowel applied:

1. Metacaulk® 1100 Fire stop Mastic
2. Bio Fireshield™ 700 Fire stop Mastic
3. Rectorseal Fire stop Mastic
4. Or Architect approved equal.

G. Non-Intumescent Fire stop Spray Sealant:

1. BIOSTOP® 750 Fire stop Spray

2. Metacaulk® 1200 Fire stop Spray
3. Rectorseal Fire stop Spray
4. FlameSafe® FS 3000 Spray
5. Or Architect approved equal.

H. Wrap Strips:

1. Bio Fireshield™ BIOSTOP™ Intumescent Wrap Strips
2. Metacaulk® Intumescent Wrap Strips
3. Rectorseal Intumescent Wrap Strips
4. FlameSafe® Intumescent Wrap Strip and Devices
5. Or Architect approved equal.

I. Fire stop Pillows:

1. Metacaulk® Fire stop PILLOWS
2. BIOSTOP® Fire stop PILLOWS
3. Rectorseal Fire stop PILLOWS
4. FlameSafe® Bags and PILLOWS
5. Or Architect approved equal.

J. Wall Opening Protective Materials:

1. LECTRA-STOP™ Fire Rated Electrical Box Inserts, by BIO FIRESHIELD™
2. BIOSTOP® Fire Rated Putty Pads
3. Metacaulk® BOX GUARD™ Fire Rated Electrical Box Inserts, By RectorSeal Corporation
4. Metacaul® Putty Pads
5. MetacaulK® Cover Guard™
6. Bio Fireshield™ Fire stopping Gasket
7. FlameSafe® Putty Pads
8. Or Architect approved equal.

K. Fire Rated Joint Backing Material:

1. Metacaulk® Joint Strips
2. BIOSTOP® Joint Strips
3. Rectorseal Joint Strips
4. Or Architect approved equal.

L. Composite Sheet Materials:

1. Metacaulk® Composite Sheet
2. BIOSTOP® Composite Sheet
3. Rectorseal Composite Sheet.
4. Or Architect approved equal.

M. Fire stop Cast in Place Sleeves:

1. Metacaulk® Cast-in-Place Devices
2. BIOSTOP® Cast-in-Place Devices
3. Rectorseal Cast-in-Place Devices

4. Or Architect approved equal.

N. Cable Transit Devices:

1. Metacaulk® Fire stop Pass-Thru Device
2. Bio Fireshield™ Fire stop Pass-Thru Device
3. Rectorseal Fire stop Pass-Thru Device
4. Or Architect approved equal.

O. Accessories; as specified by the tested assembly and:

1. Forming/Damming Materials: Mineral fiberboard or other type recommended by Manufacturer's tested system.
2. Primer, Sealant and Solvent Cleaner: As recommended by manufacturer's tested system.
3. Fasteners, universal restricting collars, etc.... as recommended by the manufacturer's tested system.

PART 3 - EXECUTION

3.1 INSPECTION

A. Examine the areas and conditions where Fire stop is to be installed and notify the architect of conditions detrimental to the proper and timely completion of the work. Do not proceed with the work until unsatisfactory conditions have been corrected by the General Contractor in a manner acceptable to the architect.

B. Verify that environmental conditions are safe and suitable for installation of Fire stop product(s).

3.2 CONDITIONS REQUIRING FIRE STOPPING

A. General:

1. Provide fire stopping for conditions specified whether or not fire stopping is indicated, and, if indicated, whether such material is designated as insulation, safeing, or otherwise.
2. Insulation types specified in other sections shall not be installed in lieu of fire stopping material specified herein.

B. Building Exterior Perimeters

1. Where exterior facing construction is continuous past a structural floor, and a space would otherwise remain open between the inner face of the wall construction and the outer perimeter edge of the structural floor, provide fire stopping to equal the fire resistance of the floor assembly. Mineral wool by itself is not an acceptable fire stop, neither is mineral wool used with beads of caulking applied along length of mineral wool/curtain wall or mineral wool/floor slab junctures. If mineral wool is part of fire stop system, the mineral wool must

be completely covered by appropriate thickness of UL Listed Fire stop Sealant, in accordance to building code and ASTM E 2307 testing standard.

2. Fire stopping shall be provided whether or not there are any clips, angles, plates, or other members bridging or interconnecting the facing and floor systems, and whether or not such items are continuous.
3. Where an exterior wall of composite type construction passes a perimeter structural member, such as a girder, beam, or strut, and the finish on the interior wall face does not continue in proximity with the underside of the structural floor above, thus interrupting the fire-resistive integrity of the wall system, and a space would otherwise remain open between the interior face of the wall and lower edge of the structural member; provide fire stopping to continuously fill such open space.
4. Perimeter fire stop systems must match exactly to installation conditions, systems that are not tested to ASYM E 2307 standard will not be accepted.

C. Interior Walls and Partitions:

1. All fire rated interior joint, gap and linear openings are required to be fire stopped in accordance with ASTM E 1966 and UL 2079.
2. Fire rated construction joints must have a minimum class II movement capability of 12% compression and extension as tested by ASTM E 1399, unless stated to have greater requirements for movement.

   a. Exception: Bottom of wall joints may have static joint fire stop systems as tested by UL 2079 or ASTM E 1966.

3. Where a wall or partition is continuous past a structural floor, such as a stairwell and vertical shafts, and a space would otherwise remain open between the wall face and perimeter edges of the adjoining structural floor provide fire stopping.
4. Provide fire stopping whether or not there are any clips, angles, plates, or other members bridging or interconnecting the wall and floor systems, and whether or not such items are continuous.
5. Where the top edge of a fire-rated wall or partition abuts and is at right angles to fluted-type metal decking, and the construction is such that would otherwise leave the flute spaces open, provide fire stopping.

D. Penetrations:

1. Penetrations include conduit, cable, wire, pipe, duct, or other elements which pass through one or both sides of a fire rated floor, wall, or partition. Except for floors on grade, where a penetration occurs through a structural floor or roof and a space would otherwise remain open between the surfaces of the penetration and the edge of the adjoining structural floor or roof, provide fire stopping to fill such spaces in accordance with ASTM E 814 and UL 1479.
2. Where penetrations occur at fire-rated walls or partitions of solid-type construction, provide fire-stopping to completely fill spaces around the penetration, in accordance with ASTM E 814 and UL 1479. Where penetrations occur at fire-rated walls or partitions of hollow-type construction, provide fire stopping to completely fill spaces around the penetration, on each side of the wall or partition, in accordance with ASTM E 814 and UL 1479.

3. These requirements for penetrations shall apply whether or not sleeves have been provided, and whether or not penetrations are to be equipped with escutcheons or other trim. If penetrations are sleeved, fire stop annular space - if any - between sleeve and wall of opening.

E. Construction Joints:

1. Where openings occur for expansion, at intersections of dissimilar rated construction, or control joints provide a rated joint system in accordance with ASTM E 1966 or UL 2079.
2. Fire-resistant joint systems shall be securely installed in or on the joint for its entire length so as not to dislodge, loosen or otherwise impair its ability to accommodate expected building movements and to resist the passage of fire and hot gases.
3. Fire-resistant joint systems shall be tested in accordance with the requirements of either ASTM E 1966 or UL 2079. Nonsymmetrical wall joint systems shall be tested with both faces exposed to the furnace, and the assigned fire-resistance rating shall be the shortest duration obtained from the two tests.

F. Fire stop Cast in Place Devices:

1. Fire stop Cast in Place devices must have third party tested systems to the required F and T ratings of the floor penetrated.
2. Cast in Place devices must be tested to ASTM E 814 and UL 1479 test standards for through penetration fire stop systems, and have written verification of passing UL accelerated aging and environmental exposure test.
3. Every Cast in place device must have sufficient Intumescent material to completely close the floor opening without a penetration passing through the device.
4. A single Cast in Place device must provide protection for all types of penetrations in a single device including but not limited to:

   a. Cables, MC cable, data
   b. Plastic penetrations
   c. Metal penetrations
   d. Insulated metal and plastic penetrations
   e. Mixed multiple penetrations
   f. Blank opening or zero series in the UL classification directory

G. Cable Transit Devices:

1. Cable transit device or cable pass through device (cable sleeve) must have ASTM E814 and UL1479 tested F ratings equal to the penetrated assembly, and L ratings of <5cfm at 0% through 100% visual fill.
2. Cable transit device must be a standalone fire stop system capable of new installation of cables and retrofit installation for existing cables with same device.
3. Cable transit device must not apply mechanical pressure, pinch, or twist penetrating cables or items.
4. Cable transit device must have approved UL systems for high voltage cable, conduit, EMT, metal pipes, PVC, and CPVC penetrations.
5. Cable transit device must allow for 100% visual fill of cable installation.

6. Approved cable transit devices must be available in round as well as square configurations, where round devices can be installed inside of metallic conduit.
7. Cable transit devices must be available with pre manufactured brackets allowing single, double, triple, and six gang installation of cable transit device.

H. Provide fire stopping to fill miscellaneous voids and openings in fire-rated construction in a manner essentially the same as specified herein before:

3.3 INSTALLATION

A. General:

1. Installation of Fire stop shall be performed by either a specialty contractor specializing in fire stop application (FM G 4991 or UL Qualified Fire stop Contractor), or General Contractor with experience in similar applications and projects with installers qualified, trained, and certified by the fire stop manufacturer. Installation shall be performed in strict accordance with manufacturer's detailed installation procedures.
2. Apply Fire stop in accordance with fire test reports, fire resistance requirements, acceptable sample installations and manufacturer's recommendations.
3. Coordinate with plumbing, mechanical, electrical and other trades to assure that all pipe, conduit, cable, and other items which penetrate fire rated construction have been permanently installed prior to installation of Fire stop, schedule and sequence work to assure that partitions and other construction, which would conceal penetrations, are not erected prior to the installation of Fire stop.

B. Dam Construction

1. Install dams when required to properly contain Fire stopping materials within openings and as required to achieve required fire resistance rating. Combustible damming material must be removed after appropriate curing. Incombustible damming materials may be left as a permanent component of the Fire stop system.

C. Field Quality Control

1. Prepare and install fire stopping systems in accordance with manufacturer's printed instructions and recommendations.
2. Follow safety procedures recommended in the Material Safety Data Sheets.
3. Finish surfaces of fire stopping which is to remain exposed in the completed Work to a uniform and level condition.
4. All areas of Work must be accessible until inspection by the applicable Code authorities.
5. Correct unacceptable fire stop and provide additional inspection to verify compliance with this specification at no additional cost.

D. Third Party Inspection:

1. During installation, provide periodic Third-Party inspections to assure proper application.

2. After installation is complete, submit findings in writing with certification that Systems and Designs were followed.
3. Inspector will utilize ASTM E 2174 and 2393 standards for inspection of installed fire stop. (Inspector is to be contracted by owner)

3.4 CLEANING

A. Remove spilled and excesses materials adjacent to fire stopping without damaging adjacent surfaces.

B. Leave finished Work in neat, clean condition with no evidence of spillovers or damage to adjacent surfaces.

END OF SECTION 078400

SECTION 079200 - JOINT SEALANTS

PART 1 - GENERAL

1.1 RELATED DOCUMENTS

A. Drawings and general provisions of the Contract, including General and Supplementary Conditions and Division 01 Specification Sections, apply to this Section.

1.2 SUMMARY

A. Section Includes:

1. Silicone joint sealants.
2. Latex joint sealants.
3. Acoustical joint sealants.

B. Related Sections:

1. Division 04 Section "Unit Masonry" for masonry control and expansion joint fillers and gaskets.
2. Division 07 Section "Expansion Control" for building expansion joints.
3. Division 07 Section "Fire-Resistive Joint Systems" for sealing joints in fire-resistance-rated construction.
4. Division 08 Section "Glazing" for glazing sealants.
5. Division 09 Section "Gypsum Board" for sealing perimeter joints.
6. Division 09 Section "Tiling" for sealing tile joints.
7. Division 09 Section "Acoustical Panel Ceilings" for sealing edge moldings at perimeters with acoustical sealant.

1.3 PRECONSTRUCTION TESTING

A. Preconstruction Compatibility and Adhesion Testing: Submit to joint-sealant manufacturers, for testing indicated below, samples of materials that will contact or affect joint sealants.

1. Use ASTM C 1087 to determine whether priming and other specific joint preparation techniques are required to obtain rapid, optimum adhesion of joint sealants to joint substrates.
2. Submit not fewer than eight pieces of each kind of material, including joint substrates, shims, joint-sealant backings, secondary seals, and miscellaneous materials.
3. Schedule sufficient time for testing and analyzing results to prevent delaying the Work.
4. For materials failing tests, obtain joint-sealant manufacturer's written instructions for corrective measures including use of specially formulated primers.
5. Testing will not be required if joint-sealant manufacturers submit joint preparation data that are based on previous testing, not older than 24 months, of sealant

products for adhesion to, and compatibility with, joint substrates and other materials matching those submitted.

B. Preconstruction Field-Adhesion Testing: Before installing sealants, field test their adhesion to Project joint substrates as follows:

1. Locate test joints where indicated on Project or, if not indicated, as directed by Architect.
2. Conduct field tests for each application indicated below:

   a. Each kind of sealant and joint substrate indicated.

3. Notify Architect seven days in advance of dates and times when test joints will be erected.
4. Arrange for tests to take place with joint-sealant manufacturer's technical representative present.

   a. Test Method: Test joint sealants according to Method A, Field-Applied Sealant Joint Hand Pull Tab, in Appendix X1 in ASTM C 1193 or Method A, Tail Procedure, in ASTM C 1521.

      1) For joints with dissimilar substrates, verify adhesion to each substrate separately; extend cut along one side, verifying adhesion to opposite side. Repeat procedure for opposite side.

5. Report whether sealant failed to adhere to joint substrates or tore cohesively. Include data on pull distance used to test each kind of product and joint substrate. For sealants that fail adhesively, retest until satisfactory adhesion is obtained.
6. Evaluation of Preconstruction Field-Adhesion-Test Results: Sealants not evidencing adhesive failure from testing, in absence of other indications of noncompliance with requirements, will be considered satisfactory. Do not use sealants that fail to adhere to joint substrates during testing.

1.4 SUBMITTALS

A. Product Data: For each joint-sealant product indicated.

B. LEED Submittal:

1. Product Data for Credit EQ 4.1: For sealants and sealant primers used inside the weatherproofing system, including printed statement of VOC content.

C. Samples for Initial Selection: Manufacturer's color charts consisting of strips of cured sealants showing the full range of colors available for each product exposed to view.

D. Samples for Verification: For each kind and color of joint sealant required, provide Samples with joint sealants in 1/2-inch- (13-mm-) wide joints formed between two 6-inch- (150-mm-) long strips of material matching the appearance of exposed surfaces adjacent to joint sealants.

E. Joint-Sealant Schedule: Include the following information:

1. Joint-sealant application, joint location, and designation.
2. Joint-sealant manufacturer and product name.
3. Joint-sealant formulation.
4. Joint-sealant color.

F. Qualification Data: For qualified Installer

G. Product Certificates: For each kind of joint sealant and accessory, from manufacturer.

H. Product Test Reports: Based on evaluation of comprehensive tests performed by a qualified testing agency, indicating that sealants comply with requirements.

I. Preconstruction Compatibility and Adhesion Test Reports: From sealant manufacturer, indicating the following:

1. Materials forming joint substrates and joint-sealant backings have been tested for compatibility and adhesion with joint sealants.
2. Interpretation of test results and written recommendations for primers and substrate preparation needed for adhesion.

J. Field-Adhesion Test Reports: For each sealant application tested.

K. Warranties: Sample of special warranties.

1.5 QUALITY ASSURANCE

A. Installer Qualifications: Manufacturer's authorized representative who is trained and approved for installation of units required for this Project.

B. Source Limitations: Obtain each kind of joint sealant from single source from single manufacturer.

C. Product Testing: Test joint sealants using a qualified testing agency.

1. Testing Agency Qualifications: An independent testing agency qualified according to ASTM C 1021 to conduct the testing indicated.
2. Test according to SWRI's Sealant Validation Program for compliance with requirements specified by reference to ASTM C 920 for adhesion and cohesion under cyclic movement, adhesion-in-peel, and indentation hardness.

D. Mockups: Install sealant in mockups of assemblies specified in other Sections that are indicated to receive joint sealants specified in this Section. Use materials and installation methods specified in this Section.

1.6 PROJECT CONDITIONS

A. Do not proceed with installation of joint sealants under the following conditions:

1. When ambient and substrate temperature conditions are outside limits permitted by joint-sealant manufacturer or are 40 deg F.
2. When joint substrates are wet.

3. Where joint widths are less than those allowed by joint-sealant manufacturer for applications indicated.
4. Where contaminants capable of interfering with adhesion have not yet been removed from joint substrates.

1.7 WARRANTY

A. Special Installer's Warranty: Manufacturer's standard form in which Installer agrees to repair or replace joint sealants that do not comply with performance and other requirements specified in this Section within specified warranty period.

1. Warranty Period: Two years from date of Substantial Completion.

B. Special warranties specified in this article exclude deterioration or failure of joint sealants from the following:

1. Movement of the structure caused by structural settlement or errors attributable to design or construction resulting in stresses on the sealant exceeding sealant manufacturer's written specifications for sealant elongation and compression.
2. Disintegration of joint substrates from natural causes exceeding design specifications.
3. Mechanical damage caused by individuals, tools, or other outside agents.
4. Changes in sealant appearance caused by accumulation of dirt or other atmospheric contaminants.

PART 2 - PRODUCTS

2.1 MATERIALS, GENERAL

A. Compatibility: Provide joint sealants, backings, and other related materials that are compatible with one another and with joint substrates under conditions of service and application, as demonstrated by joint-sealant manufacturer, based on testing and field experience.

B. VOC Content of Interior Sealants: Provide sealants and sealant primers for use inside the weatherproofing system that comply with the following limits for VOC content when calculated according to 40 CFR 59, Part 59, Subpart D (EPA Method 24):

1. Architectural Sealants: 250 g/L.
2. Sealant Primers for Nonporous Substrates: 250 g/L.
3. Sealant Primers for Porous Substrates: 775 g/L.

C. Liquid-Applied Joint Sealants: Comply with ASTM C 920 and other requirements indicated for each liquid-applied joint sealant specified, including those referencing ASTM C 920 classifications for type, grade, class, and uses related to exposure and joint substrates.

1. Suitability for Immersion in Liquids. Where sealants are indicated for Use I for joints that will be continuously immersed in liquids, provide products that have

undergone testing according to ASTM C 1247. Liquid used for testing sealants is deionized water, unless otherwise indicated.

D. Stain-Test-Response Characteristics: Where sealants are specified to be non-staining to porous substrates, provide products that have undergone testing according to ASTM C 1248 and have not stained porous joint substrates indicated for Project.

E. Suitability for Contact with Food: Where sealants are indicated for joints that will come in repeated contact with food, provide products that comply with 21 CFR 177.2600.

F. Colors of Exposed Joint Sealants: As selected by Architect from manufacturer's full range of standard and custom colors.

2.2 SILICONE JOINT SEALANTS

A. Single-Component, Non-sag, Neutral-Curing Silicone Joint Sealant: ASTM C 920, Type S, Grade NS, Class 50, for Use NT.

1. Products: Subject to compliance with requirements, provide one of the following:

a. BASF Building Systems; Omniseal 50.
b. Dow Corning Corporation; 756 SMS.
c. GE Advanced Materials - Silicones; SilGlaze II SCS2800.
d. May National Associates, Inc.; Bondaflex Sil 295.
e. Pecora Corporation; 864
f. Polymeric Systems, Inc.; PSI-641.
g. Sika Corporation, Construction Products Division; SikaSil-C995.
h. Tremco Incorporated; Spectrem 2.

B. Single-Component, Nonsag, Traffic-Grade, Neutral-Curing Silicone Joint Sealant: ASTM C 920, Type S, Grade NS, Class 100/50, for Use T.

1. Products: Subject to compliance with requirements, available products that may be incorporated into the Work include, but are not limited to, the following:

a. Dow Corning Corporation; 790.
b. May National Associates, Inc.; Bondaflex Sil 728 NS.
c. Pecora Corporation; 301 NS.
d. Tremco Incorporated; Spectrem 800.

C. Mildew-Resistant, Single-Component, Nonsag, Neutral-Curing Silicone Joint Sealant: ASTM C 920, Type S, Grade NS, Class 25, for Use NT.

1. Products: Subject to compliance with requirements, available products that may be incorporated into the Work include, but are not limited to, the following:

a. Pecora Corporation; 898.

2.3 LATEX JOINT SEALANTS

A. Latex Joint Sealant: Acrylic latex or siliconized acrylic latex, ASTM C 834, Type OP, Grade NF.

1. Products: Subject to compliance with requirements, available products that may be incorporated into the Work include, but are not limited to, the following:

a. BASF Building Systems; Sonolac.
b. Bostik, Inc.; Chem-Calk 600.
c. Pecora Corporation; AC-20+.
d. Schnee-Morehead, Inc.; SM 8200.
e. Tremco Incorporated; Tremflex 834.

2.4 PREFORMED JOINT SEALANTS

A. Preformed Silicone Joint Sealants: Manufacturer's standard sealant consisting of precured low-modulus silicone extrusion, in sizes to fit joint widths indicated, combined with a neutral-curing silicone sealant for bonding extrusions to substrates.

1. Products: Subject to compliance with requirements, provide one of the following:

a. Dow Corning Corporation; 123 Silicone Seal.
b. GE Advanced Materials - Silicones; UltraSpan US1100.
c. May National Associates, Inc.; Bondaflex Silbridge 300.
d. Pecora Corporation; Sil-Span.
e. Sealex, Inc.; ImmerBond.

B. Preformed Foam Joint Sealant: Manufacturer's standard preformed, pre-compressed, open-cell foam sealant manufactured from urethane foam with minimum density of 10 lb/cu. ft. (160 kg/cu. m) and impregnated with a nondrying, water-repellent agent. Factory produce in pre-compressed sizes in roll or stick form to fit joint widths indicated; coated on one side with a pressure-sensitive adhesive and covered with protective wrapping.

1. Products: Subject to compliance with requirements, provide one of the following:

a. Dayton Superior Specialty Chemicals; Polytite Standard.
b. EMSEAL Joint Systems, Ltd.; Emseal 25V.
c. Sandell Manufacturing Co., Inc.; Polyseal.
d. Schul International, Inc.; Sealtite.
e. Willseal USA, LLC; Willseal 150.

2.5 ACOUSTICAL JOINT SEALANTS

A. Acoustical Joint Sealant: Manufacturer's standard non-sag, paintable, non-staining latex sealant complying with ASTM C 834. Product effectively reduces airborne sound transmission through perimeter joints and openings in building construction as demonstrated by testing representative assemblies according to ASTM E 90.

1. Products: Subject to compliance with requirements, available products that may be incorporated into the Work include, but are not limited to, the following:

    a. Pecora Corporation; AC-20 FTR.
    b. USG Corporation; SHEETROCK Acoustical Sealant.

2.6 JOINT SEALANT BACKING

A. General: Provide sealant backings of material that are non-staining; are compatible with joint substrates, sealants, primers, and other joint fillers; and are approved for applications indicated by sealant manufacturer based on field experience and laboratory testing.

B. Cylindrical Sealant Backings: ASTM C 1330, Type C (closed-cell material with a surface skin) and of size and density to control sealant depth and otherwise contribute to producing optimum sealant performance.

C. Bond-Breaker Tape: Polyethylene tape or other plastic tape recommended by sealant manufacturer for preventing sealant from adhering to rigid, inflexible joint-filler materials or joint surfaces at back of joint. Provide self-adhesive tape where applicable.

2.7 MISCELLANEOUS MATERIALS

A. Primer: Material recommended by joint-sealant manufacturer where required for adhesion of sealant to joint substrates indicated, as determined from preconstruction joint-sealant-substrate tests and field tests.

B. Cleaners for Nonporous Surfaces: Chemical cleaners acceptable to manufacturers of sealants and sealant backing materials, free of oily residues or other substances capable of staining or harming joint substrates and adjacent nonporous surfaces in any way, and formulated to promote optimum adhesion of sealants to joint substrates.

C. Masking Tape: Non-staining, nonabsorbent material compatible with joint sealants and surfaces adjacent to joints.

PART 3 - EXECUTION

3.1 EXAMINATION

A. Examine joints indicated to receive joint sealants, with Installer present, for compliance with requirements for joint configuration, installation tolerances, and other conditions affecting joint-sealant performance.

B. Proceed with installation only after unsatisfactory conditions have been corrected.

3.2 PREPARATION

A. Surface Cleaning of Joints: Clean out joints immediately before installing joint sealants to comply with joint-sealant manufacturer's written instructions and the following requirements:

1. Remove all foreign material from joint substrates that could interfere with adhesion of joint sealant, including dust, paints (except for permanent, protective coatings tested and approved for sealant adhesion and compatibility by sealant manufacturer), old joint sealants, oil, grease, waterproofing, water repellents, water, surface dirt, and frost.
2. Clean porous joint substrate surfaces by brushing, grinding, mechanical abrading, or a combination of these methods to produce a clean, sound substrate capable of developing optimum bond with joint sealants. Remove loose particles remaining after cleaning operations above by vacuuming or blowing out joints with oil-free compressed air. Porous joint substrates include the following:

    a. Concrete.
    b. Masonry.
    c. Unglazed surfaces of ceramic tile.
    d. Exterior insulation and finish systems.

3. Remove laitance and form-release agents from concrete.
4. Clean nonporous joint substrate surfaces with chemical cleaners or other means that do not stain, harm substrates, or leave residues capable of interfering with adhesion of joint sealants. Nonporous joint substrates include the following:

    a. Metal.
    b. Glass.
    c. Porcelain enamel.
    d. Glazed surfaces of ceramic tile.

B. Joint Priming: Prime joint substrates where recommended by joint-sealant manufacturer or as indicated by preconstruction joint-sealant-substrate tests or prior experience. Apply primer to comply with joint-sealant manufacturer's written instructions. Confine primers to areas of joint-sealant bond; do not allow spillage or migration onto adjoining surfaces.

C. Masking Tape: Use masking tape where required to prevent contact of sealant or primer with adjoining surfaces that otherwise would be permanently stained or damaged by such contact or by cleaning methods required to remove sealant smears. Remove tape immediately after tooling without disturbing joint seal.

3.3 INSTALLATION OF JOINT SEALANTS

A. General: Comply with joint-sealant manufacturer's written installation instructions for products and applications indicated, unless more stringent requirements apply.

B. Sealant Installation Standard: Comply with recommendations in ASTM C 1193 for use of joint sealants as applicable to materials, applications, and conditions indicated.

C. Install sealant backings of kind indicated to support sealants during application and at position required to produce cross-sectional shapes and depths of installed sealants relative to joint widths that allow optimum sealant movement capability.

1. Do not leave gaps between ends of sealant backings.
2. Do not stretch, twist, puncture, or tear sealant backings.
3. Remove absorbent sealant backings that have become wet before sealant application and replace them with dry materials.

D. Install bond-breaker tape behind sealants where sealant backings are not used between sealants and backs of joints.

E. Install sealants using proven techniques that comply with the following and at the same time backings are installed:

1. Place sealants so they directly contact and fully wet joint substrates.
2. Completely fill recesses in each joint configuration.
3. Produce uniform, cross-sectional shapes and depths relative to joint widths that allow optimum sealant movement capability.

F. Tooling of Non-sag Sealants: Immediately after sealant application and before skinning or curing begins, tool sealants according to requirements specified in subparagraphs below to form smooth, uniform beads of configuration indicated; to eliminate air pockets; and to ensure contact and adhesion of sealant with sides of joint.

1. Remove excess sealant from surfaces adjacent to joints.
2. Use tooling agents that are approved in writing by sealant manufacturer and that do not discolor sealants or adjacent surfaces.
3. Provide concave joint profile per Figure 8A in ASTM C 1193, unless otherwise indicated.
4. Provide flush joint profile where indicated per Figure 8B in ASTM C 1193.
5. Provide recessed joint configuration of recess depth and at locations indicated per Figure 8C in ASTM C 1193.

    a. Use masking tape to protect surfaces adjacent to recessed tooled joints.

G. Installation of Preformed Silicone-Sealant System: Comply with the following requirements:

1. Apply masking tape to each side of joint, outside of area to be covered by sealant system.
2. Apply silicone sealant to each side of joint to produce a bead of size complying with preformed silicone-sealant system manufacturer's written instructions and covering a bonding area of not less than 3/8 inch (10 mm). Hold edge of sealant bead 1/4 inch (6 mm) inside masking tape.
3. Within 10 minutes of sealant application, press silicone extrusion into sealant to wet extrusion and substrate. Use a roller to apply consistent pressure and ensure uniform contact between sealant and both extrusion and substrate.
4. Complete installation of sealant system in horizontal joints before installing in vertical joints. Lap vertical joints over horizontal joints. At ends of joints, cut silicone extrusion with a razor knife.

H. Installation of Preformed Foam Sealants: Install each length of sealant immediately after removing protective wrapping. Do not pull or stretch material. Produce seal continuity at ends, turns, and intersections of joints. For applications at low ambient temperatures, apply heat to sealant in compliance with sealant manufacturer's written instructions.

I. Acoustical Sealant Installation: At sound-rated assemblies and elsewhere as indicated, seal construction at perimeters, behind control joints, and at openings and penetrations with a continuous bead of acoustical sealant. Install acoustical sealant at both faces of partitions at perimeters and through penetrations. Comply with ASTM C 919 and with manufacturer's written recommendations.

3.4 CLEANING

A. Clean off excess sealant or sealant smears adjacent to joints as the Work progresses by methods and with cleaning materials approved in writing by manufacturers of joint sealants and of products in which joints occur.

3.5 PROTECTION

A. Protect joint sealants during and after curing period from contact with contaminating substances and from damage resulting from construction operations or other causes so sealants are without deterioration or damage at time of Substantial Completion. If, despite such protection, damage or deterioration occurs, cut out and remove damaged or deteriorated joint sealants immediately so installations with repaired areas are indistinguishable from original work.

3.6 JOINT-SEALANT SCHEDULE

A. Joint-Sealant Application: Exterior joints in horizontal traffic surfaces.

1. Joint Locations:

    a. Control and expansion joints in brick pavers.
    b. Isolation and contraction joints in cast-in-place concrete slabs.
    c. Joints between plant-precast architectural concrete paving units.
    d. Joints in stone paving units
    e. Tile control and expansion joints.
    f. Joints between different materials listed above.

2. Silicone Joint Sealant: Single component, non-sag, traffic grade, neutral curing.
3. Joint-Sealant Color: As selected by Architect from manufacturer's full range of colors.

B. Joint-Sealant Application: Exterior joints in vertical surfaces and horizontal nontraffic surfaces

1. Joint Locations:

    a. Construction joints in cast-in-place concrete.

b. Joints between plant-precast architectural concrete units.
c. Control and expansion joints in unit masonry.
d. Joints in dimension stone cladding.
e. Joints in glass unit masonry assemblies.
f. Joints in exterior insulation and finish systems.
g. Joints between metal panels.
h. Joints between different materials listed above.
i. Perimeter joints between materials listed above and frames of doors windows and louvers.
j. Control and expansion joints in ceilings and other overhead surfaces.

2. Silicone Joint Sealant: Single component, non-sag, neutral curing, Class 100/50.
3. Joint-Sealant Color: As selected by Architect from manufacturer's full range of colors

C. Joint-Sealant Application: Interior joints in horizontal traffic surfaces

1. Joint Locations:

a. Isolation joints in cast-in-place concrete slabs.
b. Control and expansion joints in stone flooring.
c. Control and expansion joints in brick flooring.
d. Control and expansion joints in tile flooring.
e. Other joints as indicated.

2. Silicone Joint Sealant: Single component, non-sag, traffic grade, neutral curing.
3. Joint-Sealant Color: As selected by Architect from manufacturer's full range of colors

D. Joint-Sealant Application: Interior joints in vertical surfaces and horizontal nontraffic surfaces

1. Joint Locations:

a. Control and expansion joints on exposed interior surfaces of exterior walls.
b. Perimeter joints of exterior openings where indicated.
c. Tile control and expansion joints.
d. Vertical joints on exposed surfaces of interior unit masonry concrete walls and partitions.
e. Perimeter joints between interior wall surfaces and frames of interior doors windows and elevator entrances.

2. Joint Sealant: Latex
3. Joint-Sealant Color: As selected by Architect from manufacturer's full range of colors

E. Joint-Sealant Application: Mildew-resistant interior joints in vertical surfaces and horizontal nontraffic surfaces

1. Joint Sealant Location:

a. Joints between plumbing fixtures and adjoining walls, floors, and counters.
b. Tile control and expansion joints where indicated.

2. Joint Sealant: Mildew resistant, single component, non-sag, neutral curing, Silicone
3. Joint-Sealant Color: As selected by Architect from manufacturer's full range of colors

F. Joint-Sealant Application: Interior acoustical joints in vertical surfaces and horizontal nontraffic surfaces

1. Joint Location:

   a. Acoustical joints where indicated.
   b. Other joints as indicated.

2. Joint Sealant: Acoustical
3. Joint-Sealant Color: As selected by Architect from manufacturer's full range

END OF SECTION 079200

SECTION 081743 – FRP / Aluminum Hybrid Doors

PART 1 GENERAL

1.01 SECTION INCLUDES

A. SL-17 Pebble Grain FRP/ Aluminum Hybrid Door installed in Aluminum Framing.

1.02 RELATED SECTIONS

A. Section 081216 – Aluminum Frames.
B. Section 084113 – Aluminum-Framed Entrances.
C. Section 087100 – Door Hardware.

1.03 REFRENCES

A. AAMA 1503-98 – Thermal Transmittance and Condensation Resistance of Windows, Doors and Glazed Wall Sections.
B. ANSI A250.4 – Test Procedure and Acceptance Criteria for Physical Endurance of Steel Doors and Hardware Reinforcing.
C. ASTM-B117 – Standard Practices for Operating Salt Spray (Fog) Apparatus.
D. ASTM-B209 – Standard Specification for Aluminum and Aluminum-Alloy Sheet and Plate.
E. ASTM-B221 – Standard Specification for Aluminum-Alloy Extruded Bars, Rods, Wire, Profiles, and Tubes.
F. ASTM-C518 – Standard test Method for Steady-State Thermal Transmission Properties by Means of Heat Flow Meter Apparatus.
G. ASTM-D256 – Standard Test Methods for Determining the Pendulum Impact Resistance of Plastics.
H. ASTM-D570 – Standard Test Method for Water Absorption of Plastics.
I. ASTM-D638 – Standard Test Method for Tensile Properties of Plastics.
J. ASTM-D790 – Standard Test Methods for Flexural Properties of Unreinforced and Reinforced Plastics and Electrical Insulating Materials.
K. ASTM-D1621 – Standard Test Method for Compressive Properties of Rigid Cellular Plastics.
L. ASTM-D1622 – Standard Test Method for Apparent Density of Rigid Cellular Plastics.
M. ASTM-D1623 – Standard Test Method for Tensile and Tensile Adhesion Properties of Rigid Cellular Plastics.
N. ASTM-D2126 – Standard Test Method for Response of Rigid Cellular Plastics to Thermal and Humid Aging.
O. ASTM-D2583 – Standard Test Method for Indentation Hardness of Rigid Plastics by Means of a Barcol Impressor.
P. ASTM-D3029 – Test Methods for Impact Resistance of Flat Rigid Plastic Specimens by Means of a Tup (Falling Weight) (Withdrawn 1995) (Replaced by ASTM-D5420).
Q. ASTM-D5116 – Standard Guide for Small-Scale Environmental Chamber Determinations of Organic Emissions from Indoor Materials/ Products.
R. ASTM-D5420 – Standard Test Method for Impact Resistance of Flat, Rigid Plastic Specimen by Means of a Striker Impacted by a Falling Weight (Gardner Impact).
S. ASTM-D6670 – Standard Practice for Full-Scale Chamber Determination of Volatile Organic Emissions from Indoor Materials/ Products.
T. ASTM-E84 – Standard Test Method for Surface Burning Characteristics of Building Materials.
U. ASTM-E90 – Standard Test Method for Laboratory Measurement of Airborne Sound Transmission Loss of Building Partitions.
V. ASTM-E283 – Standard Test Method for Determining Rate of Air Leakage Through Exterior Windows, Curtain Walls, and Doors Under Specified Pressure Differences Across the Specimen.
W. ASTM-E330 – Standard Test Method for Structural Performance of Exterior Windows, Curtain Walls, and Doors by Uniform Static Air Pressure Difference.
X. ASTM-E1886 – Standard Test Method for Performance of Exterior Windows, Curtain Walls, Doors and Storm Shutters Impacted by Missile(s) and Exposed to Cyclic Pressure Differentials.
Y. ASTM-E1996 – Standard Specification for Performance of Exterior Windows, Glazed Curtain Walls, Doors and Storm Shutters Impacted by Wind Borne Debris in Hurricanes.

Z. ASTM-F476 – Standard Test Methods for Security of Swinging Door Assemblies.
AA. ASTM-F1642-04 – Standard Test Method for Glazing Systems Subject to Air Blast Loading.
BB. NWWDA T.M. 7-90 – Cycle Slam Test Method.
CC. NFRC 100 – Procedure for Determining Fenestration Products U-Factors.
DD. NFRC 400 – Procedure for Determining Fenestration Products Air Leakage.
EE. TAS 201 – Impact Test Procedures.
FF. TAS 202 – Criteria for Testing Impact & Nonimpact Resistant Building Envelope Components Using Uniform Static Air Pressure.
GG. TAS 203 – Criteria for Testing Products Subject to Cyclic Wind Pressure Loading.

1.04 SUBMITTALS

A. Must comply with Section 013300 – Submittal Procedures.
B. Action Submittals/ Informational Submittals.
1. Product Data.
a. Submit manufacturer's product data sheets, catalog pages illustrating the products, description of materials, components, fabrication, finishes, installation instructions, and applicable test reports.
2. Shop Drawings.
a. Submit manufacturer's shop drawings, including elevations, sections, and details indicating dimensions, tolerances, materials, fabrication, doors, panels, framing, hardware schedule, and finish.
3. Samples.
a. Submit manufacturer's door sample composed of door face sheet, core, framing and finish.
b. Submit manufacturer's sample of standard colors for door face and frame.
4. Testing and Evaluation Reports.
a. Submit testing reports and evaluations provided by manufacturer conducted by and accredited independent testing agency certifying doors and frames comply with specified performance requirements listed in Section 2.04.
5. Manufacturer Reports.
a. Manufacturer's Project References.
1. Submit list of successfully completed projects including project name, location, name of architect, type, and quantity of doors manufactured.
C. Closeout Submittals.
1. Operation and Maintenance Manual.
a. Submit manufacturer's maintenance and cleaning instructions for doors and frames, including maintenance and operating instructions for hardware.
2. Warranty Documentation.
a. Submit manufacturer's standard warranty.

1.05 QUALITY ASSURANCE

A. Manufacturer's Qualifications.
1. Continuously engaged in manufacturing of doors of similar type to that specified, with a minimum of 25 years concurrent successful experience.
2. Door and frame components must be fabricated by same manufacturer.
3. Evidence of a documented complaint resolution quality management system.

1.06 DELIVERY, STORAGE, AND HANDLING

A. Delivery.
1. Deliver materials to site in manufacturer's original, unopened, containers and packaging.
2. Labels clearly identifying opening, door mark, and manufacturer.
B. Storage.
1. Store materials in a clean, dry area, indoors in accordance with manufacturer's instructions.
C. Handling.
1. Protect materials and finish from damage during handling and installation.

1.07 WARRANTY

A. Warrant doors, frames, and factory installed hardware against failure in materials and workmanship, including excessive deflection, faulty operation, defects in hardware installation, and deterioration of finish or construction in excess of normal weathering.
B. Standard Period.
   1. Ten years starting on date of shipment.
C. Limited lifetime
   1. Covers failure of corner joinery, core deterioration, and delamination or bubbling of door skin and corrosion of all-fiberglass products while the door is in its specified application in its original installation.
D. Finish
   1. Kynar painted aluminum: 10 years.
   2. Painted SL-17, SL-18, SL-19, SL-19-1, and SL-20 face sheets: 5 years.
   3. Painted AF-150 frames, AF-250 frames: 3 years.
   4. Anodized, aluminum:10 years.
   5. Thresholds do not have a finish warranty.

PART 2 PRODUCTS

2.01 FRP/ALUMINUM HYBRID DOORS

A. Manufacturer.
   1. Basis-of-Design Product: Special-Lite, Inc.
      a. PO Box 6, Decatur, Michigan 49045.
      b. Toll Free (800) 821-6531, Phone (269) 423-7068, Fax (800) 423-7610.
      c. Web Site www.special-lite.com.
      d. E-Mail info@special-lite.com.

B. Product Substitutions: Subject to compliance with requirements, provide products that are Architect approved equals.

2.02 DESCRIPTION

A. Model.
   1. SL-17 Pebble Grain FRP/ Aluminum Hybrid Door.
B. Door Opening Size.
   1. Refer to door schedule shown on the drawings.
C. Construction.
   1. Door Thickness.
      a. 1-3/4".
   2. Stiles & Rails.
      a. Aluminum extrusions made from 6063 aluminum alloys with a minimum temper of T5.
      b. Minimum 2-5/16" deep one-piece extrusion with have integral reglets to accept face sheet on both interior and exterior side of door which secure face sheet into place and permit flush appearance.
      c. Screw or snap in place applied caps are not acceptable.
      d. Top rails must have integral legs for interlocking continuous extruded aluminum flush cap.
      e. Bottom rails must have integral legs for interlocking continuous weather bar with single nylon brush weather stripping or manually adjustable SL-301 door bottom with two nylon brush weather stripping.
      f. Meeting stiles to include integral pocket to accept pile brush weather seal.
   3. Corners.
      a. Mitered.
      b. Secured with 3/8" diameter full-width steel tie rod through extruded splines top and bottom which are integral to standard tubular shaped rails.
      c. 1-1/4" x 1-1/4" x 3/16" 6061 aluminum angle reinforcement at corner to give strong, flat surface for locking hex nut to bear on.

d. Weld, glue, or other methods of corner joinery are not acceptable.

4. Core.
   a. Poured-in-place polyurethane foam.
   b. Laid in foam cores are not acceptable.
   c. Foam Plastic Insulated Doors: IBC 2603.4.
      1. Foam plastic shall be separated from the interior of a building by an approved thermal barrier.
      2. Approved thermal barrier must meet the acceptance criteria of the Temperature Transmission Fire Test and Integrity Fire Test as stated in NFPA 275.
      3. IBC 2603.4.1.7 foam plastic insulation, having a flame spread index less than 75 and a smoke developed index of not more than 450 shall be permitted as a door core when the face is metal minimum 0.032" aluminum or 0.016" steel.
      4. Standard door assembly can be tested to show it meets these requirements without the use of thermal barrier. If no independent testing conducted all doors with foam plastic core must have a thermal barrier.
5. Face Sheet.
   a. Exterior
      1. 0.120" thick, pebble texture, through color with SpecLite 3® integral surfaseal film FRP sheet.
      2. Optional painted finish consult manufacturer.
      3. Class C standard.
   b. Interior
      1. 0.120" thick, pebble texture, through color with SpecLite 3® integral surfaseal film FRP sheet.
      2. Optional painted finish consult manufacturer.
      3. Class C standard optional Class A available consult manufacturer.
   c. Attachment of face sheet.
      1. Extruded stiles and rails to have integral reglets to accept face sheet on both interior and exterior side of door which secure face sheet into place and permit flush appearance.
      2. Use of glue to bond face sheet to core or extrusions is not acceptable.
6. Cutouts.
   a. Manufacture doors with cutouts for required vision lites, louvers, and panels.
7. Hardware.
   a. Pre-machine doors in accordance with templates from specified hardware manufacturers.
   b. Surface mounted closures will be reinforced for but not prepped or installed at factory.
   c. Factory install door hardware.
8. Reinforcements.
   a. Aluminum extrusions made from 6061 or 6063 aluminum alloys.
   b. Sheet and plate to conform to ASTM-B209.
   c. Alloy and temper to be selected by manufacturer for strength, corrosion resistance, and application of required finish, and control of color.
   d. Bars and tubes to meet ASTM-B221.

2.03 FRAMING

A. Framing
   1. Aluminum Tube Framing with Applied Stops.
      a. Model.
         1. SL-260.
      b. Materials.
         1. See 2.05.A.
      c. Perimeter Frame Members.
         1. Box type with 4 enclosed sides.
         2. Factory fabricated.
         3. Open-back framing is not acceptable.
      d. Applied Door Stops.

1. 5/8" x 1-1/4" or 5/8" x 1-3/4", 0.125" wall thickness, with screws and weather-stripping.
2. Provide solid ½" aluminum bar behind door stop for closer shoe attachment.
3. Pressure gasketing for weathering seal.
4. Counterpunch fastener holes in door stop to preserve full-metal thickness under fastener head.

e. Caulking.
1. Caulk joints before assembling frame members.

f. Frame Member to Member Connections.
1. Secure joints with fasteners.
2. Provide hairline butt joint appearance.

g. Hardware
1. Pre-machine and reinforce frame members for hardware in accordance with manufacturer's standards and door hardware schedule.
2. Surface mounted closures will be reinforced for but not prepped or installed at factory.
3. Factory install door hardware.

h. Anchors:
1. Anchors appropriate for wall conditions to anchor framing to wall materials.
2. Door Jamb and Header Mounting Holes: Maximum of 24-inch centers.
3. Secure head and sill members of transom, side lites, and similar conditions.

B. Face Sheet.
1. Standard Interior and Exterior Class C 0.120" thick, pebble texture, through color with SpecLite 3® integral surfaseal film FRP sheet.
a. Flexural Strength, ASTM-D790: 21 x 10^3 psi.
b. Flexural Modulus, ASTM-D790: 0.7 x 10^6 psi.
c. Tensile Strength, ASTM-D638: 13 x 10^3 psi.
d. Tensile Modulus, ASTM-D638: 1.2 x 10^6 psi.
e. Barcol Hardness, ASTM-D2583: 55.
f. Izod Impact, ASTM-D256: 14.0 ft-lb/in.
g. Gardner Impact Strength, ASTM-D5420: 120 in-lb.
h. Water Absorption, ASTM-D570: 0.20%/24hrs at 77°F.
i. Surface Burning, ASTM-E84: Flame Spread ≤ 200, Smoke Developed ≤ 450.
j. Taber Abrasion Resistance, Taber Test: 0.007% Max Wt. Loss, cs-17 wheels, 1000g. Wt., 25 cycles.
k. Chemical Resistance.
1. Excellent Rating.
a. Acetic Acid, Concentrated.
b. Acetic Acid, 5%.
c. Bleach Solution.
d. Detergent Solution.
e. Distilled Water.
f. Ethyl Acetate.
g. Formaldehyde.
h. Heptane.
i. Hydrochloric Acid, 10%.
j. Hydrogen Peroxide, 3%.
k. Isooctane.
l. Lactic Acid, 10%.

l. USDA/FSIS Requirements.
1. FRP face sheet with SpecLite 3® integral surfaseal is a finished outer surface material that is rigid; durable; non-toxic; non-corrosive; moisture resistant; a light, solid color such as white; easily inspected; smooth or an easily cleaned texture.
2. FRP face sheet with SpecLite 3® integral surfaseal does not contain any known carcinogen, mutagen, or teratogen classified as hazardous substances; heavy metals or toxic substances; antimicrobials; pesticides or substances with pesticidal characteristics.

2. Optional Interior Face Only Class A 0.120" thick, pebble texture, through color with SpecLite 3® integral surfaseal film FRP sheet.
    a. Flexural Strength, ASTM-D790: 13 x 10^3 psi.
    b. Flexural Modulus, ASTM-D790: 0.57 x 10^6 psi.
    c. Tensile Strength, ASTM-D638: 6.8 x 10^3 psi.
    d. Tensile Modulus, ASTM-D638: 0.90 x 10^6 psi.
    e. Barcol Hardness, ASTM-D2583: 40.
    f. Izod Impact, ASTM-D256: 12.0 ft-lb/in notched.
    g. Gardner Impact Strength, ASTM-D3029: 45 in-lb.
    h. Water Absorption, ASTM-D570: 0.32%/24hrs at 77°F.
    i. Surface Burning, ASTM-E84: Flame Spread ≤ 25, Smoke Developed ≤ 450.
    j. Taber Abrasion Resistance, Taber Test: 0.02% Max Wt. Loss, cs-17 wheels, 1000g. Wt., 25 cycles.

C. Door Core.
1. Density, ASTM-D1622: ≤ 5.0 pcf.
2. Compressive Properties, ASTM-D1621: Compressive Strength ≥ 60 psi, Compressive Modulus ≥ 1948 psi.
3. Tensile and Tensile Adhesion Properties, ASTM-D1623: Tensile Adhesion, 3" x 3" FRP Facers ≥ 53 psi, Tensile Adhesion, 1" x 1" Foam ≥ 104 psi.
4. Thermal and Humid Aging, ASTM-D2126: Volume Change at 158 °F, 100% humidity, 14 days ≤ 13%.
5. Thermal Conductivity, ASTM-C518, Thermal Resistance ≥ 0.10 m^2K/W.

D. Door Panel.
1. Thermal Transmittance, AAMA 1503-98: U-Factor = 0.29 $Btu/hr{\cdot}ft^2{\cdot}°F$, CRFp = 55.
2. Indoor Air Quality, ASTM-D5116, ASTM-D6607: GreenGuard, GreenGuard Gold.

E. Door and Aluminum Tube Frame Assembly.
1. Physical Endurance, ANSI A250.4: 25,000,000 Cycles, No Damage.
2. Salt Spray, ASTM-B117: 500 hours minimum exposure.
3. Air Leakage, NFRC 400, ASTM-E283.
    a. Opaque Swinging Door (< than 50% glass)
        1. 0.01 cfm/sqft @ 1.57 psf.
        2. 0.01 cfm/sqft @ 6.24 psf.
    b. Commercially Glazed Swinging Entrance Door (> than 50% glass)
        1. 0.38 cfm/sqft @ 1.57 psf.
        2. 0.73 cfm/sqft @ 6.24 psf.
4. Structural Performance, ASTM E-330.
    a. Single or Pair of Doors, 8'4" x 8'2" overall size, single point latching.
        1. ± 75 psf design pressure, pass.
5. Impact and Cycle Test, ASTM-E1886.
    a. Single or Pair of Doors, 6'8" x 7'8" overall size, 3-point latching.
        1. 9 lbs. missile @ 50 fps, minimum 3 impacts, no rips, tears, or penetrations.
        2. ± 75 psf design pressure, pass.
6. Forced Entry, AAMA 1304.
    a. Single or Pair of Doors, 6'8" x 7'8" overall size, 3-point latching.
        1. 300lb Pull Test, pass.
7. Impact Test, TAS 201.
    a. Single or Pair of Doors, 6'8" x 7'8" overall size, 3-point latching.
        1. 9 lbs. missile @ 50 fps, minimum 3 impacts, no rips, tears, or penetrations.
8. Static Air Pressure, TAS 202.
    a. Single or Pair of Doors, 6'8" x 7'8" overall size, 3-point latching.
        1. ± 65 psf design pressure, pass.
        2. Forced Entry, 300lb Pull Test, pass.
9. Cyclic Wind Pressure Loading, TAS 203.
    a. Single or Pair of Doors, 6'8" x 7'8" overall size, 3-point latching.
        1. ± 65 psf design pressure, pass.
10. Security Test, ASTM-F476: Minimum Grade 40.

11. Blast Test, ASTM-F1642.
    a. 6 psi @ 45 psi-msec, minimal hazard, operable.

F. Door and Thermally Broken Aluminum Frame Assembly.
1. Thermal Transmittance, NFRC 100.
    a. Opaque Swinging Door (< than 50% glass)
        1. U-Factor = 0.31 Btu/hr·ft²·°F.
    b. Commercially Glazed Swinging Entrance Door (> than 50% glass)
        1. U-Factor = 0.64 Btu/hr·ft²·°F.
2. Air Leakage, NFRC 400, ASTM-E283.
    a. Opaque Swinging Door (< than 50% glass)
        1. 0.01 cfm/sqft @ 1.57 psf.
        2. 0.01 cfm/sqft @ 6.24 psf.
    b. Commercially Glazed Swinging Entrance Door (> than 50% glass)
        1. 0.38 cfm/sqft @ 1.57 psf.
        2. 0.73 cfm/sqft @ 6.24 psf.
3. Sound Transmission, ASTM-E90: STC = 30, OITC = 29.

G. Door and AF-150 Frame Assembly.
1. Thermal Transmittance, NFRC 100.
    a. Opaque Swinging Door (< than 50% glass)
        1. U-Factor = 0.32 Btu/hr·ft²·°F.
    b. Commercially Glazed Swinging Entrance Door (> than 50% glass)
        1. U-Factor = 0.57 Btu/hr·ft²·°F.
2. Air Leakage, NFRC 400, ASTM-E283.
    a. Opaque Swinging Door (< than 50% glass)
        1. 0.12 cfm/sqft @ 1.57 psf.
        2. 0.06 cfm/sqft @ 6.24 psf.
    b. Commercially Glazed Swinging Entrance Door (> than 50% glass)
        1. 0.04 cfm/sqft @ 1.57 psf.
        2. 0.14 cfm/sqft @ 6.24 psf.

H. Door and Hollow Metal Steel Frame.
1. Cycle Slam, NWWDA T.M. 7-90.
    a. 5,000,000 cycles.
        1. No Operational Damage.
        2. No Hinge Separation.

I. AF-150 Framing.
1. Tensile Strength, ASTM-D638: 15,900 psi.
2. Tensile Modulus of Elasticity, ASTM-D638: 1.58 x 10^6 psi.
3. Maximum Compressive Strength, ASTM-D695: 15,500 psi.
4. Compressive Modulus of Elasticity, ASTM-D695: 6.7 x 10^5 psi.
5. Flexural Strength, ASTM-D790: 39.3 x 10^3 psi.
6. Flexural Modulus, ASTM-D790: 1.23 x 10^6 psi.
7. Izod Impact, ASTM-D256: 8.1 ft-lb/in.
8. Barcol Hardness, ASTM-D2583: 57.
9. Specific Gravity, ASTM-D792: 1.45 @ 23 °C.
10. Density, ASTM-D792: 1445.6 kg.m^3 @ 23 °C.
11. Coefficient of Linear Expansion, ASTM-D696: 1.26 x 10^{-5} in/in/°F.
12. Short Beam Strength, ASTM-D2344: 3,980 psi.
13. Fastener Withdrawal, ASTM-D1761: 924 lbs.
14. Percent Fiberglass: 60%.

2.04 MATERIALS

A. Aluminum Members.
1. Aluminum extrusions made 6061 or 6063 aluminum alloys.
2. Sheet and plate to conform to ASTM-B209.
3. Alloy and temper to be selected by manufacturer for strength, corrosion resistance, and application of required finish, and control of color.

B. Fiberglass.
   1. See 2.02.C.5.
C. Fasteners.
   1. All exposed fasteners will have a finish to match material being fastened.
   2. 410 stainless steel or other non-corrosive metal.
   3. Must be compatible with items being fastened.

2.05 FABRICATION

A. Factory Assembly.
   1. Door and frame components from the same manufacturer.
   2. Required size for door and frame units, shall be as indicated on the drawings.
   3. Complete cutting, fitting, forming, drilling, and grinding of metal before assembly.
   4. All cut edges to be free of burs.
   5. Welding of doors or frames is not acceptable.
   6. Maintain continuity of line and accurate relation of planes and angles.
   7. Secure attachments and support at mechanical joints with hairline fit at contact surfaces.
B. Shop Fabrication
   1. All shop fabrication to be completed in accordance with manufactures process work instructions.
   2. Quality control to be performed before leaving each department.

2.06 FINISHES

A. Door.
   1. Aluminum.
      a. Anodizing.
         1. Class 1 Anodizing, minimum 0.7 mils thick.
            a. Color: As selected by the Architect from the manufacturer's full range of colors.

   2. FRP Face Sheets
      a. Through color.
         1. Color: As selected by the Architect from the manufacturer's full range of colors.

B. Frame

   1. Aluminum.
      a. Anodizing.
         1. Class 1 Anodizing, minimum 0.7 mils thick.
            a. Color: As selected by the Architect from the manufacturer's full range of colors.

   2. Fiberglass.
      a. Two-part aliphatic polyurethane paint.
         1. Color: As selected by the Architect from the full range of manufacturer's colors.
         2. Custom colors available consult manufacturer.
         3. Unique, high-solids, high-build, multifunctional coating.
         4. Low VOC, high-gloss, self-priming coating.
         5. Impact Resistance, ASTM-D2794: 140 in·lbs (direct), 50 in·lbs (reverse) @ 5 mils thickness.
         6. Taber Abrasion, 1 kg load, 1000 cycles, CS-17 wheel: 60.2 mg.
         7. Graffiti cleaning with Amerase with gloss retention: 100 cycles.
         8. Chemical Resistance.
            a. Excellent.
               1. Acidic.
               2. Alkaline.
               3. Salt Solutions.
               4. Seawater.
               5. Fresh Water.
               6. Petroleum Products.

2.07 ACCESSORIES

A. Vision Lites.
    1. Factory Glazing.
        a. Model.
            1. FL Standard.
        b. Glazing Thickness.
            1. 1/4".
        c. Rectangular Lites.
                a. Size, as indicated on drawings.
            2. Rectangular Vision Lite Accessories.
                a. Vandal Screen.
                1. SL-SG350.
                a. Frame perimeter is aluminum.
                b. Screen material is 16-gauge stainless steel sheet perforated with ¼" diameter round holes.
                b. Finish.
                c. Color: As selected by the Architect from the full range of manufacturer's colors.

B. Hardware.
    1. Pre-machine doors in accordance with templates from specified hardware manufactures and hardware schedule.
    2. Factory install hardware.
    3. Hardware Schedule.
        a. As follows.
            1. Hinges.
                a. SL-11HD.
            2. Locking Hardware.
                a. Refer to section 087100 – Door Hardware
            3. Flush/ Surface Bolts.
                a. None
            4. Door Pulls.
                a. Refer to section 087100 – Door Hardware
            5. Panic Bars.
                a. Refer to section 087100 – Door Hardware
            6. Concealed adjustable bottom brush.
                a. SL-301.
                1. Not for use with CVR type hardware.
            7. Concealed adjustable meeting stile astragal.
                a. Adjustable astragal by Special-Lite.
            8. Thresholds.
                a. Aluminum threshold by Special-Lite.
C. Architectural Panels.
    1. FRP Panels.
        a. SL-37.
            1. Size, as indicated on drawings.
            2. Thickness.
                a. 1-3/4".
            3. Face Sheet.
                a. Material.
                1. Standard exterior and interior face, Class C 0.120" thick, pebble texture, through color with SpecLite 3® integral surfaseal film FRP sheet.
                2. Optional interior face only, Class A 0.120" thick, pebble texture, through color with SpecLite 3® integral surfaseal film FRP sheet.
                b. Color: As selected by the Architect from the full range of manufacturer's colors.
            4. Performance.

a. Face Sheet.
   1. See 2.02.C.5.
b. 1-3/4" Thick Panel.
   1. Wood or aluminum frame perimeter.
   2. Poured-in-place Polyurethane Foam Core.
   3. Thermal Performance, AAMA 1503-98.
      a. U-Factor = 0.10 Btu/hr·ft²·°F.
      b. CRFp = 87.
      c.

PART 3 EXECUTION

3.01 EXAMINATION
A. Examine areas to receive doors.
B. Notify architect of conditions that would adversely affect installation or subsequent use.
C. Do no proceed with installation until unsatisfactory conditions are corrected.

3.02 PREPARATION
A. Ensure openings to receive frames are plumb, level, square, and in tolerance.

3.03 ERECTION
A. Install doors in accordance with manufacturer's instructions.
B. Install doors plumb, level, square, true to line, and without warp or rack.
C. Anchor frames securely in place.
D. Separate aluminum from other metal surfaces with bituminous coatings or other means approved by architect.
E. Set thresholds in bed of mastic and back seal.
F. Install exterior doors to be weathertight in closed position.
G. Repair minor damages to finish in accordance with manufacturer's instructions and as approved by architect.
H. Remove and replace damaged components that cannot be successfully repaired as determined by architect.

3.04 FIELD QUALITY CONTROL
A. Manufacture's Field Services.
   1. Manufacturer's representative shall provide technical assistance and guidance for installation of doors.

3.05 ADJUSTING
A. Adjust doors, hinges, and locksets for smooth operation without binding.

3.06 CLEANING
A. Clean doors promptly after installation in accordance with manufacturer's instructions.
B. Do not use harsh cleaning materials or methods that would damage finish.

3.07 PROTECTION
A. Protect installed doors to ensure that, except for normal weathering, doors will be without damage or deterioration at time of substantial completion.

END OF SECTION

SECTION 083113 - ACCESS DOORS AND FRAMES

PART 1 - GENERAL

1.1 RELATED DOCUMENTS

A. Drawings and general provisions of the Contract, including General and Supplementary Conditions and Division 01 Specification Sections, apply to this Section.

1.2 SUMMARY

A. This Section includes the following:

1. Access doors and frames for walls and ceilings.
2. Floor access doors and frames.

B. Related Sections include the following:
1. Division 09 Section "Acoustical Tile Ceilings" for suspended acoustical tile ceilings.
2. Division 23 Section "Air Duct Accessories" for heating and air-conditioning duct access doors.

1.3 SUBMITTALS

A. Product Data: For each type of access door and frame indicated. Include construction details, **fire** ratings, materials, individual components and profiles, and finishes.

B. Shop Drawings: Show fabrication and installation details of access doors and frames for each type of substrate. Include plans, elevations, sections, details, and attachments to other work.

C. Samples: For each door face material, at least 3 by 5 inches in size, in specified finish.

D. Access Door and Frame Schedule: Provide complete access door and frame schedule, including types, locations, sizes, latching or locking provisions, and other data pertinent to installation.

E. Ceiling Coordination Drawings: Reflected ceiling plans, drawn to scale, on which ceiling-mounted items including access doors and frames, lighting fixtures, diffusers, grilles, speakers, sprinklers, and special trim are shown and coordinated with each other.

1.4 QUALITY ASSURANCE

A. Source Limitations: Obtain access door(s) and frame(s) through one source from a single manufacturer.

B. Fire-Rated Access Doors and Frames: Units complying with NFPA 80 that are identical to access door and frame assemblies tested for fire-test-response characteristics per the following test method and that are listed and labeled by UL or another testing and inspecting agency acceptable to authorities having jurisdiction:

1. NFPA 252 for vertical access doors and frames.
2. ASTM E 119 for horizontal access doors and frames.

C. Size Variations: Obtain Architect's acceptance of manufacturer's standard-size units, which may vary slightly from sizes indicated.

1.5 COORDINATION

A. Verification: Determine specific locations and sizes for access doors needed to gain access to concealed plumbing, mechanical, or other concealed work, and indicate in the schedule specified in "Submittals" Article.

PART 2 - PRODUCTS

2.1 STAINLESS-STEEL MATERIALS

A. Rolled-Stainless-Steel Floor Plate: ASTM A 793, manufacturer's standard finish.

B. Stainless-Steel Sheet, Strip, Plate, and Flat Bars: ASTM A 666, Type 316. Remove tool and die marks and stretch lines or blend into finish.

1. Finish: Manufacturer's standard.

C. Drywall Beads: Edge trim formed from 0.0299-inch (0.76-mm) stainless steel sheet formed to receive joint compound and in size to suit thickness of gypsum board.

D. Plaster Beads: Casing bead formed from 0.0299-inch (0.76-mm) stainless steel sheet with flange formed out of expanded metal lath and in size to suit thickness of plaster.

2.2 ACCESS DOORS AND FRAMES FOR WALLS AND CEILINGS

A. Available Manufacturers: Subject to compliance with requirements, manufacturers offering products that may be incorporated into the Work include, but are not limited to, the following:

B. Manufacturers: Subject to compliance with requirements, provide products by one of the following:

1. Acudor Products, Inc.
2. Babcock-Davis; A Cierra Products Co.
3. Bar-Co, Inc. Div.; Alfab, Inc.
4. Cendrex Inc.
5. Dur-Red Products.
6. Elmdor/Stoneman; Div. of Acorn Engineering Co.

7. Jensen Industries.
8. J. L. Industries, Inc.
9. Karp Associates, Inc.
10. Larsen's Manufacturing Company.
11. MIFAB, Inc.
12. Milcor Inc.
13. Nystrom, Inc.
14. Williams Bros. Corporation of America (The).

C. Flush Access Doors and Frames with Exposed Trim: Fabricated from stainless-steel sheet.

1. Locations: Wall and ceiling surfaces.
2. Door: Minimum 0.060-inch- (1.5-mm-) thick sheet metal, set flush with exposed face flange of frame.
3. Frame: Minimum 0.060-inch- (1.5-mm-) thick sheet metal with 1-inch- wide, surface-mounted trim.
4. Hinges: Continuous piano
5. Latch: Cam latch operated by flush key with interior release.

D. Fire Rated, Uninsulated, Flush Access Doors and Frames with Exposed Trim: Fabricated from stainless-steel sheet.

1. Locations: Wall surfaces.
2. Fire-Resistance Rating: Not less than that of adjacent construction
3. Door: Minimum 0.060-inch- (1.5-mm-) thick sheet metal, flush construction.
4. Frame: Minimum 0.060-inch- (1.5-mm-) thick sheet metal with 1-inch- (25-mm-) wide, surface-mounted trim.
5. Hinges: Concealed-pin type.
6. Automatic Closer: Spring type.
7. Latch: Self-latching device operated by flush key with interior release.

2.3 FABRICATION

A. General: Provide access door and frame assemblies manufactured as integral units ready for installation.

B. Metal Surfaces: For metal surfaces exposed to view in the completed Work, provide materials with smooth, flat surfaces without blemishes. Do not use materials with exposed pitting, seam marks, roller marks, rolled trade names, or roughness.

C. Doors and Frames: Grind exposed welds smooth and flush with adjacent surfaces. Furnish attachment devices and fasteners of type required to secure access panels to types of supports indicated.

1. Exposed Flanges: Nominal 1 to 1-1/2 inches (25 to 38 mm) wide around perimeter of frame.
2. For trimless frames with plaster bead for full-bed plaster applications, provide zinc-coated expanded metal lath and exposed casing bead welded to perimeter of frames.
3. Provide mounting holes in frames for attachment of units to metal or wood framing.

4. Provide mounting holes in frame for attachment of masonry anchors. Furnish adjustable metal masonry anchors.

D. Recessed Access Doors: Form face of panel to provide recess for application of applied finish. Reinforce panel as required to prevent buckling.

1. For recessed doors with plaster infill, provide self-furring expanded metal lath attached to door panel.

E. Latching Mechanisms: Furnish number required to hold doors in flush, smooth plane when closed.

1. For cylinder lock, furnish two keys per lock and key all locks alike.

F. Extruded Aluminum: After fabrication, apply manufacturer's standard protective coating on aluminum that will come in contact with concrete.

PART 3 - EXECUTION

3.1 INSTALLATION

A. Comply with manufacturer's written instructions for installing access doors and frames.

B. Set frames accurately in position and attach securely to supports with plane of face panels aligned with adjacent finish surfaces.

C. Install doors flush with adjacent finish surfaces or recessed to receive finish material.

3.2 ADJUSTING AND CLEANING

A. Adjust doors and hardware after installation for proper operation.

B. Remove and replace doors and frames that are warped, bowed, or otherwise damaged.

END OF SECTION 083113

083300-OVERHEAD ROLLING SHUTTERS

PART 1 GENERAL

1.1 SUMMARY

A. Rolling Shutters as shown on the drawings and specified herein.

B. Contractor shall be responsible for the construction and preparation of openings, access panels; field wiring, wire conduit, fuses, disconnect switches; finish or field painting not provided by the manufacturer.

1.2 SYSTEM DESCRIPTION

A. Rolling shutters shall be designed for standard cycle usage, with 100,000 cycle life spring & bearing assemblies.

1.3 WARRANTY

A. Limited Two years from date of substantial use – warranty does not apply to finishes.

PART 2 PRODUCTS

2.1 MANUFACTURER

A. Basis of Design Manufacturer: Alumatec Pacific Products – 1155 West 500 North, Centerville, UT 84014 – www.alumatecpp.com
   1. Contact Sale Department: 801-298-0181 ext. 1 or toll free 877-770-0181 ext. 1

B. Substitutions: Subject to compliance with requirements, available manufacturers with minimum five years experience in manufacture of similar products in successful use in similar applications.

C. Approval of Comparable Products: Submit the following in accordance with project substitution requirements, within time allowed for substitution review:
   1. Product data, including certified independent test data indicating compliance with requirements.
   2. Samples of each component.
   3. Sample submittal from similar project.
   4. Project references: Minimum of five installations not less than five years old, with Owner and Architect contact information.
   5. Sample warranty.

2.2 MATERIALS

A. Curtain shall be assembled from horizontal rods to consist of extruded aluminum, 7/8" x ½" horizontal hinge system, spaced at 4" on center. Vertical "I" bracing to be spaced at 36" on center, with 32" clear window spacing. Polycarbonate windows to be framed with vertical PVC "H" for quiet operation, and to protect windows from damage when rolled upon itself. All aluminum from 6063 alloy, clear anodized aluminum extrusion and from US produced Billet.

B. Polycarbonate (window) 3/32" clear at 32" aperture from AR-1 (UV rated) polycarbonate.

C. Wind Load rating: Wind locks included on LXR-(E) exterior and connected on selected panels (configured per height of opening) using Double Row bearings to secure curtain within the vertical guides under a wind load up to 50 mph. (do not operator door when winds are in excess rating)

D. Bottom Rail From 3" x 2" x 3/16" angle sandwiched back-to-back.

E. Barrel shall be steel tubing or pipe, 6 5/8" minimum diameter, to contain counterbalance assembly and support the curtain with a maximum deflection of 0.03 per ft. of width. Counterbalance assembly consists of coil tempered helical torsion spring(s) mounted on a cold r o l l e d steel shaft, rotating though a sealed bearing. Welding shall be not to be used to attach plug to barrel at spring end. Spring tensions adjustable by a tension wheel outside of bracket.

F. Brackets are steel plates, 3/16" minimum thickness, bolted to guides, to support barrel. Bracket on operator side with UCF or Lutco® flanged bearing (sealed), and factory prime painted with rust inhibitor primer.

G. Guides are rectangular shapes extruded from 6063-alloy aluminum, formed to retain curtain, and fitted with wool pile or PVC wear- strips. Guides are attached to jambs with ¼" minimum bolts spaced not more than 24" on center. Ceiling stops provided.

H. Operation Motor: Gaposa direct drive 120Nm operator and control unit

I. Locking shall be as indicated:

    1. SELF-LOCKING (through the gear reduction of the motor operator)

2.3 FINISHES

A. Aluminum curtain finish as selected by the Architect from the manufacturer's full range of colors and finishes:

B. Bottom bar, Bottom bar cap/flange plate, and guides finish as selected by the Architect from the manufacturer's full range of colors and finishes:

C. Exposed steel surfaces are painted with a rust-inhibiting gray or black primer on exterior applications.

PART 3 EXECUTIONS

3.1 INSTALLATION

A. Doors are to be installed in accordance with manufacturer's installation instructions by an authorized dealer.

END OF SECTION 083300

SECTION 084113 - ALUMINUM-FRAMED ENTRANCES & STOREFRONTS

PART 1 GENERAL

Furnish all necessary materials, labor, and equipment for the complete installation of the aluminum swing doors, door frames, hardware, and storefront framing system as shown on the drawings and specified herein.

1.01 SUMMARY

A. Section includes: Aluminum Swing Doors, including:
   1. YKK AP Model 50H Impact Resistant and Blast Mitigating Heavy Duty Swing Doors.
   2. YKK AP Model 50H Impact Resistant and Blast Mitigating Heavy Duty Swing Doors for Insulating Glass.

B. Related Sections:
   1. Glass: Contact YKK AP for approved glass types.
   2. Glazing: Structural silicone sealant.
   3. Single Source Requirement: All products listed below shall be by the same manufacturer.
      a. Section 08 32 13 Sliding Aluminum-Framed Glass Doors.
      b. Section 08 44 13 Glazed Aluminum Curtain Walls.
      c. Section 08 44 33 Sloped Glazing Assemblies.
      d. Section 08 51 13 Aluminum Windows.

1.02 SYSTEM PERFORMANCE DESCRIPTION

A. All test unit sizes and configurations shall conform to the minimum sizes in accordance with; Florida High Velocity Hurricane Zone (HVHZ) Protocols, ASTM E 1886, ASTM E 1996, all requirements of TAS 201, TAS 202, and TAS 203. They shall also comply with the following specific performance requirements indicated.
   1. Air Infiltration (Single Acting Butt Hinges, Continuous Hinges, or Offset Pivots): Air infiltration shall be tested in accordance with ASTM E 283 at static pressure of 1.57 PSF (75 Pa). Infiltration shall not exceed 0.50 CFM/FT² for single door or 1.00 CFM/FT² for pair doors.
   2. Water Infiltration: No uncontrolled water other than condensation on indoor face of any component tested in accordance with ASTM E 331 at a test pressure differential of 10.5 psf (503 Pa). Water test to be performed immediately after design pressure test. Standard 50H Entrances are intended for 1st floor applications.
   3. Structural: Door corner structural strength shall be tested per YKK AP's dual moment test procedure and certified by an independent testing laboratory to ensure corner integrity and weld compliance. Certified test procedures and results are available upon request.
   4. Structural Uniform Load Test:
      a. Doors:
         1) Positive Pressure:
            90 PSF – For Air Only Threshold.
            70 PSF – For Air and Water Threshold.
         2) Negative Pressure: 90 PSF
   5. Forced Entry Resistance: Tests performed simultaneously with 300 lb. forces applied to the active door panel within 3" of the locks in the direction that would tend to open the door while 150 lb. forces are applied in both perpendicular directions to the 300 lb. force simultaneously.
   6. Thermal Performance: When tested in accordance with AAMA 1503 and NFRC 102:
      a. Condensation Resistance Factor (CRF_f): A minimum of 28.
      b. Thermal Transmittance U Value: 0.77 BTU/HR/FT²/°F or less.
   7. Acoustical Performance: Acoustical Performance: When tested in accordance with ASTM E 90, AAMA 1801:
      a. Sound Transmission Class (STC) shall not be less than: 1" IGU; 32, laminated; 34.
      b. Outdoor–Indoor Transmission Class (OITC) shall not be less than: 1" IGU; 30, 1" laminated; 31.

1.03 SUBMITTALS

A. General: Prepare, review, approve, and submit specified submittals in accordance with "Conditions of the Contract" and Division 1 Submittals Section. Product data, shop drawings, samples, and similar submittals are defined in "Conditions of the Contract".

B. Product Data: Submit product data for each entrance series specified.
C. Substitutions: Whenever substitute products are to be considered, supporting technical data, samples, and test reports must be submitted ten (10) working days prior to bid date in order to make a valid comparison.
D. Shop Drawings: Submit shop drawings showing layout, profiles, and product components, including anchorage, accessories, and finish colors.
E. Samples: Submit verification samples for colors. Minimum 2½ inch by 3 inch (61mm by 73 mm) samples on actual aluminum substrates indicating full color range expected in installed system.
F. Quality Assurance / Control Submittals:
   1. Test Reports: Submit certified test reports showing compliance with specified performance characteristics and physical properties.
   2. Installer Qualification Data: Submit installer qualification data.
G. Close-out Submittals:
   1. Warranty: Submit executed warranty documents specified herein, endorsed by YKK AP authorized official and installer.
   2. Project Record Documents: Submit project record documents, including operation and maintenance data for installed materials in accordance with Division 1 Project Close-out (Project Record Documents) Section.

1.04 QUALITY ASSURANCE
A. Qualifications:
   1. Installer Qualifications: Installer experienced (as determined by contractor) to perform work of this section who has specialized in the installation of work similar to that required for this project. If requested by Owner, submit reference list of completed projects.
   2. Manufacturer Qualifications: Manufacturer capable of providing field service representation during construction process.
B. Mock-Ups (Field Constructed): Install at project site a job mock-up using acceptable products and manufacturer approved installation methods. Obtain Owner's and Architect's acceptance of finish color, and workmanship standard.
   1. Mock-Up Size:
   2. Maintenance: Maintain mock-up during construction for workmanship comparison; remove and legally dispose of mock-up when no longer required.
   3. Incorporation: Mock-up may be incorporated into final construction upon Owner's approval.
C. Pre-Installation Meetings: Conduct pre-installation meeting to verify project requirements, substrate conditions, manufacturer's installation instructions, and manufacturer's warranty requirements.

1.05 PRODUCT CONDITIONS / SITE CONDITIONS
A. Field Measurements: Verify actual measurements/openings by field measurements before fabrication; show recorded measurements on shop drawings. Coordinate field measurements, fabrication schedule with construction progress to avoid construction delays.

1.06 WARRANTY
A. Project Warranty: Refer to "Conditions of the Contract" for project warranty provisions.
B. Manufacturer's Warranty: Submit, for Owner's acceptance, manufacturer's standard warranty document executed by an authorized company official.
   1. Warranty Period: Manufacturer's one (1) year standard warranty commencing on the substantial date of completion for the project provided that the warranty, in no event, shall start later than six (6) months from the date of shipment by YKK AP America Inc.

PART 2 PRODUCTS
It is the intent of this specification to have a single source responsibility for the supply of the aluminum doors and framing systems on this project. Any deviation from the acceptable manufacturers listed below must be approved in writing by the architect at least ten (10) days prior to bid date.

2.01 MANUFACTURERS (Acceptable Manufacturers/Products)

A. Acceptable Manufacturers: YKK AP America Inc.
101 Marietta Street NW, Suite 2100
Atlanta, GA 30303
Telephone: (678) 838-6000; Fax: (678) 838-6001

1. Impact Resistant and Blast Mitigating Entrances:
   YKK AP Model 50H Impact Resistant and Blast Mitigating Entrances.
   a. 50H Description: 5" (127 mm) Door Stile, 2-3/8" thick.
2. Corner Construction: Fabricate door corners joined by concealed reinforcement secured with screws and sigma deep penetration welding.
3. Glazing: Manufacturer's standard glazing stops with EPDM glazing gaskets to prevent water infiltration at the exterior and structural silicone sealant for wet glazing, EPDM silicone compatible gasket for dry glazing with fixed stops at the interior.
4. Weather-stripping: Manufacturer's standard elastomer type in replaceable rabbets for stiles and rails.

5a. Standard Hardware:
(1-1/2 to 2) pair of Grade 1 mortised butt hinges per leaf. Ball bearing 4-1/2" x 4" NRP Stainless Steel US32D finish.
(1) Adams Rite® MS1850 three point hookbolt lock on active leaf or single door. (1) Adams Rite two point lock on inactive leaf.
(2) H-4202 Keyed cylinders (H-4204 thumbturn on inside optional).
Type "A" standard YKK AP push/pull (Type "C" 1" diameter tubular push/pull is optional).
LCN 4040 surface mounted closer (hold open optional).
(1) Adams E9-0503 mill finish (air only) threshold.

5b. Optional Hardware:
Rixson® offset pivots.
Roton® 780-226HD continuous hinge(s).
Select® SL 27HD continuous hinge(s).
MS 1850 Single Point (Active) with Flush Bolts (Inactive)
MS 2180 Flush Bolts (Inactive) with either MS 1850 Single or 3 point
Von Duprin® Rim Panic (98 / 99 series).
Sargent® Rim Panic – WS-AD8500.
Corbin Russwin® Rim Panic ED4200.
Yale® Rim Panic 7250 M.
Falcon™ (Dor-O-Matic®) HS2390 CVR.
Falcon™ (Dor-O-Matic®) HS1690 CVR.
Falcon™ (Dor-O-Matic®) 1490 CVR.
Sargent AD 8400 CVR.

2.02 MATERIALS

A. Extrusions: ASTM B 221 (ASTM B 221M), 6063-T5 Aluminum Alloy.

B. Aluminum Sheet:

1. Anodized Finish: ASTM B 209 (ASTM B 209M), 5005-H14 Aluminum Alloy, 0.050" (1.27 mm) minimum thickness.
2. Painted Finish: ASTM B 209 (ASTM B 209M), 3003-H14 Aluminum Alloy, 0.080" (1.95) mm) minimum thickness.

2.03 ACCESSORIES

A. Manufacturer's Standard Accessories:

1. Fasteners: Zinc plated steel concealed fasteners; Hardened aluminum alloys or AISI 300 series less steel exposed fasteners, countersunk, finish to match aluminum color.
2. Perimeter Sealant: Non-skinning type, AAMA 803.3.
3. Glazing: Setting blocks, edge blocks, and spacers in accordance with ASTM C 864, shore durometer hardness as recommended by manufacturer. Glazing gaskets in accordance with ASTM C 864.
4. Glazing Adhesive: Dow Corning® 995 Structural Silicone Sealant.

2.04 FABRICATION

A. Shop Assembly: Fabricate and assemble units with joints only at intersection of aluminum members with uniform hairline joints; rigidly secure, and sealed in accordance with manufacturer's recommendations.
   1. Hardware: Drill and cut to template for hardware. Reinforce frames and door stiles to receive hardware in accordance with manufacturer's recommendations.
   2. Welding: Conceal welds on aluminum members in accordance with AWS recommendations or methods recommended by manufacturer. Members showing welding bloom or discoloration on finish or material distortion will be rejected.

2.05 FINISHES AND COLORS

A. YKK AP America Anodized Plus® Finish:

CODE	DESCRIPTION
YS1N*	Clear Anodized Plus®
YH3N	Champagne Anodized Plus®
YB1N	Medium Bronze Anodized Plus®
YB5N*	Dark Bronze Anodized Plus®
YK1N*	Black Anodized Plus®
YW3N	White Anodized Plus®
M	Mill Finish

*Indicates standard finish usually carried as inventory.

Anodized Plus® is an advanced sealing technology that completely seals the anodic film yielding superior durability (See AAMA 612).

B. Anodized Finishing: Prepare aluminum surfaces for specified finish; apply shop finish in accordance with the following:
   1. Anodic Coating: Electrolytic color coating followed by an organic seal applied in accordance with the requirements of AAMA 612-02. Aluminum extrusions shall be produced from quality controlled billets meeting AA-6063-T5.
      a. Exposed Surfaces shall be free of scratches and other serious blemishes.
      b. Extrusions shall be given a caustic etch followed by an anodic oxide treatment and then sealed with an organic coating applied with an electrodeposition process.
      c. The anodized coating shall comply with all of the requirements of AAMA 612-02: Voluntary Specifications, Performance Requirements and Test Procedures for Combined Coatings of Anodic Oxide and Transparent Organic Coatings on Architectural Aluminum. Testing shall demonstrate the ability of the finish to resist damage from mortar, salt spray, and chemicals commonly found on construction sites, and to resist the loss of color and gloss.
      d. Overall coating thickness for finishes shall be a minimum of 0.7 mils.

C. High Performance Organic Coating Finish:
   1. Fluoropolymer Type: Factory applied two-coat 70% Kynar resin by Arkema or 70% Hylar resin by Solvay Solexis, fluoropolymer based coating system, Polyvinylidene Fluoride (PVF-2), applied in accordance with YKK AP procedures and meeting AAMA 2605 specifications.
   2. Colors: Selected by Architect from the following:
      a. Standard coating color charts.
      b. Custom coating color charts.
      c. Color Name and Number:

D. Finishes Testing:
   1. Apply 0.5% solution NaOh, sodium hydroxide, to small area of finished sample area; leave in place for sixty minutes; lightly wipe off NaOh. Do not clean area further.
   2. Submit samples with test area noted on each sample.

PART 3 EXECUTION

3.01 MANUFACTURER'S INSTRUCTIONS / RECOMMENDATIONS

A. Compliance: Comply with manufacturer's product data, including product technical bulletins, installation instructions, and product carton instructions. The latest installation instructions for this product are available at www.ykkap.com.

3.02 EXAMINATION

A. Site Verification of Conditions: Verify conditions (which have been previously installed under other sections) are acceptable for product installation in accordance with manufacturer's instructions.

1. Verify location of preset anchors, perimeter fasteners, and block-outs are in accordance with shop drawings.

3.03 PREPARATION

A. Adjacent Surfaces Protection: Protect adjacent work areas and finish surfaces from damage during product installation.

1. Aluminum Surface Protection: Protect aluminum surfaces from contact with lime, mortar, cement, acids, and other harmful contaminants.

3.04 INSTALLATION

A. General: Install manufacturer's system in accordance with shop drawings, and within specified tolerances.

3.05 FIELD QUALITY CONTROL

A. Manufacturer's Field Services: Upon request, provide manufacturer's field service consisting of site visit for inspection of product installation in accordance with manufacturer's instructions.

3.06 ADJUSTING AND CLEANING

A. Adjusting: Adjust swing doors for operation in accordance with manufacturer's recommendations.

B. Cleaning: The General Contractor shall clean installed products in accordance with manufacturer's instructions prior to owner's acceptance, and remove construction debris from project site. Legally dispose of debris.

C. Protection: The General Contractor shall protect the installed product's finish surfaces from damage during construction.

END OF SECTION 084113

084413 - GLAZED ALUMINUM CURTAIN WALL

PART 1 GENERAL

1.01 SUMMARY

A. Section Includes: Aluminum Curtain Wall Systems:
   1. YKK AP Series YHC 300 OG (Outside Glazed) Impact Resistant Aluminum Curtain Wall System.

B. Related Sections:
   1. Sealants: Dow Corning® 995 Structural Silicone Sealant.
   2. Glass and Glazing: Refer to Division 8 Glass and Glazing Section for glass and glazing requirements.
   3. Single Source Requirement: All products listed below shall be by the same manufacturer.
      a. Section 08 32 13 Sliding Aluminum - Framed Glass Doors.
      b. Section 08 41 13 Aluminum - Framed Entrances and Storefronts.
      c. Section 08 51 13 Aluminum Windows.
      d. Section 08 44 33 Sloped Glazing Assemblies.

1.02 SYSTEM PERFORMANCE DESCRIPTION

A. All test unit sizes and configurations shall conform to the minimum sizes in accordance with; Florida High Velocity Hurricane Zone (HVHZ) Protocols, ASTM E 1886, ASTM E 1996, and meet all requirements of TAS 201, TAS 202 and TAS 203. They shall also comply with the following specific performance requirements indicated.
   1. Air Infiltration: Completed curtain wall systems shall have 0.06 CFM/FT² (1.10 m³/h·m²) maximum allowable infiltration when tested in accordance with ASTM E 283 at differential static pressure of 6.24 PSF (299 Pa).
   2. Water Infiltration: No uncontrolled water, other than condensation, on indoor face of any component when tested in accordance with ASTM E 331 at test pressure differential of 20 PSF (958 Pa). Water test to be performed immediately after design pressure test.
   3. Wind Loads: Completed curtain wall system shall withstand wind pressure loads normal to wall plane indicated:
      a. Structural Performance:
         1) Positive Pressure: **40** psf.
         2) Negative Pressure: **49.0** psf.
   4. Deflection: Maximum allowable deflection in any member when tested in accordance with ASTM E 330 with allowable stress in accordance with AA Specifications for Aluminum Structures:
      a. Without Horizontals: L/175 or 3/4" (19.1mm) maximum.
      b. With Horizontals: L/175 or L/240 + 1/4" (6.4mm) for spans greater than 13'-6" (4.1m) but less than 40'-0" (12.2m).
   5. Thermal Movement: Provide for thermal movement caused by 180 degrees F. (82.2 degrees C.) surface temperature, without causing buckling stresses on glass, joint seal failure, undue stress on structural elements, damaging loads on fasteners, reduction of performance, or detrimental effects.
   6. Thermal Performance: When tested in accordance with AAMA 1503.1 and NFRC 102:
      a. Condensation Resistance Factor (CRF_f): A minimum of 72.
      b. Thermal Transmittance U Value: .42 BTU/HR/FT²/°F or less.
      Note: The CRF for the glazed system as a whole will be affected by the characteristics of the glass specified.
   7. Acoustical Performance: Acoustical Performance: When tested in accordance with ASTM E 1425:
      a. Sound Transmission Class (STC) shall not be less than 37.
      b. Outdoor–Indoor Transmission Class (OITC) shall not be less than 32.

1.03 SUBMITTALS

A. General: Prepare, review, approve, and submit specified submittals in accordance with "Conditions of the Contract" and Division 1 Submittals Sections. Product data, shop drawings, samples, and similar submittals are defined in "Conditions of the Contract."

B. Product Data: Submit product data for each type curtain wall series specified.

C. Substitutions: Whenever substitute products are to be considered, supporting technical data, samples and test reports must be submitted ten (10) working days prior to bid date in order to make a valid comparison.
D. Shop Drawings: Submit shop drawings showing layout, profiles, and product components, including anchorage, accessories, finish colors and textures.
E. Samples: Submit verification samples for colors on actual aluminum substrates indicating full color range expected in installed system.
F. Quality Assurance / Control Submittals:
   1. Test Reports: Submit certified test reports showing compliance with specified performance characteristics and physical properties.
   2. Installer Qualification Data: Submit installer qualification data.
G. Closeout Submittals:
   1. Warranty: Submit warranty documents specified herein.
   2. Project Record Documents: Submit project record documents for installed materials in accordance with Division 1 Project Closeout (Project Record Documents) Section.

1.04 QUALITY ASSURANCE
A. Qualifications:
   1. Installer Qualifications: Installer experienced (as determined by contractor) to perform work of this section who has specialized in the installation of work similar to that required for this project. If requested by Owner, submit reference list of completed projects.
   2. Manufacturer Qualifications: Manufacturer capable of providing field service representation during construction process.
B. Mock-Ups (Field Constructed): Install at project site a job mock-up using acceptable products and manufacturer approved installation methods. Obtain Owner's and Architect's acceptance of finish color, and workmanship standard.
   1. Mock-Up Size:
   2. Maintenance: Maintain mock-up during construction for workmanship comparison; remove and legally dispose of mock-up when no longer required.
   3. Incorporation: Mock-up may be incorporated into final construction upon Owner's approval.
C. Pre-Installation Meetings: Conduct pre-installation meeting to verify project requirements, substrate conditions, manufacturer's installation instructions, and manufacturer's warranty requirements.

1.05 PROJECT CONDITIONS / SITE CONDITIONS
A. Field Measurements: Verify actual measurements/openings by field measurements before fabrication; show recorded measurements on shop drawings. Coordinate field measurements, fabrication schedule with construction progress to avoid construction delays.

1.06 WARRANTY
A. Project Warranty: Refer to "Conditions of the Contract" for project warranty provisions.
B. Manufacturer's Warranty: Submit, for Owner's acceptance, manufacturer's standard warranty document executed by an authorized company official.
   1. Warranty Period: Manufacturer's one (1) year standard warranty commencing on the substantial date of completion for the project provided that the warranty, in no event, shall start later than six (6) months from the date of shipment by YKK AP America Inc.

PART 2 PRODUCTS

2.01 MANUFACTURERS (Acceptable Manufacturers/Products)
A. Basis-of-Design Product:
   YKK AP America Inc.
   101 Marietta Street NW, Suite 2100
   Atlanta, GA 30303
   Telephone: (678) 838-6000; Fax: (678) 838-6001

1. Curtain Wall System: YKK AP YHC 300 OG Curtain Wall System.

B. Curtain Wall Framing System:

1. Description: Framing System shall be thermally improved. Horizontal and vertical members shall have a nominal face dimension of 3 inches, depth as indicated on the shop drawings. Framing system shall provide a flush glazed appearance on all sides with no protruding glass stops.
2. Glazing: Manufacturer's standard silicone compatible EPDM glazing gaskets to inhibit water infiltration at the exterior and Dow Corning® 995 Structural Silicone Sealant with fixed stops at the interior; interior spacers are to be silicone.

C. Product Substitutions: Subject to compliance with requirements, provide products that are Architect approved equals.

2.02 MATERIALS

A. Extrusions: ASTM B 221 (ASTM B 221M), 6063-T5 Aluminum Alloy.

B. Aluminum Sheet:

1. Anodized Finish: ASTM B 209 (ASTM B 209M), 5005-H14 Aluminum Alloy, 0.050" (1.27 mm) minimum thickness.

2.03 ACCESSORIES

A. Manufacturer's Standard Accessories:

1. Fasteners: Zinc plated steel concealed fasteners; Hardened aluminum alloys or AISI 300 series stainless steel fasteners. Joint fasteners may be concealed.
2. Sealant: Non-skinning type, AAMA 803.3
3. Glazing: Setting blocks, edge blocks, and spacers in accordance with ASTM C 864, shore durometer hardness as recommended by manufacturer; exterior glazing silicone compatible EPDM gaskets, in accordance with ASTM C 864, designed to lock into gasket reglet, interior by means of silicone spacer and structural silicone adhesive.
4. Glazing Adhesive: Dow Corning® 995 Structural Silicone.

2.04 RELATED MATERIALS (Specified In Other Sections)

A. Glass: Refer to Division 8 Glass and Glazing Section for glass materials.

2.05 FABRICATION

A. Shop Assembly: Fabricate and assemble units with joints only at intersection of aluminum members with uniform hairline joints; rigidly secure, and sealed in accordance with manufacturer's recommendations.

1. Hardware: Drill and cut to template for hardware. Reinforce frames and door stiles to receive hardware in accordance with manufacturer's recommendations.
2. Welding: Conceal welds on aluminum members in accordance with AWS recommendations or methods recommended by manufacturer. Members showing welding bloom or discoloration on finish or material distortion will be rejected.

2.06 FINISHES AND COLORS

A. KK AP America Anodized Plus® Finish:

B. Anodized Finishing: Prepare aluminum surfaces for specified finish; apply shop finish in accordance with the following:

1. Anodic Coating: Electrolytic color coating followed by an organic seal applied in accordance with the requirements of AAMA 612. Aluminum extrusions shall be produced from quality-controlled billets meeting AA-6063-T5.
   a. Exposed Surfaces shall be free of scratches and other serious blemishes.
   b. Extrusions shall be given a caustic etch followed by an anodic oxide treatment and then sealed with an organic coating applied with an electrodeposition process.
   c. The anodized coating shall comply with all of the requirements of AAMA 612: Voluntary Specifications, Performance Requirements and Test Procedures for Combined Coatings of Anodic Oxide and Transparent Organic Coatings on Architectural Aluminum. Testing shall demonstrate the

ability of the finish to resist damage from mortar, salt spray, and chemicals commonly found on construction sites, and to resist the loss of color and gloss.

d. Overall coating thickness for finishes shall be a minimum of 0.7 mils.

C. High Performance Organic Coating Finish:

1. Type Factory applied two-coat 70% Kynar resin by Arkema or 70% Hylar resin by Solvay Solexis, fluoropolymer-based coating system, Polyvinylidene Fluoride (PVF-2), applied in accordance with YKK AP procedures and meeting AAMA 2605 specifications.
2. Colors: Selected by Architect from the following:
   a. Standard coating color charts.
   b. Custom coating color charts.
   c. Color Name and Number:

D. Finishes Testing:

1. Apply 0.5% solution NaOh, sodium hydroxide, to small area of finished sample area; leave in place for sixty minutes; lightly wipe off NaOh; Do not clean area further.
2. Submit samples with test area noted on each sample.

PART 3 EXECUTION

3.01 MANUFACTURER'S INSTRUCTIONS / RECOMMENDATIONS

A. Compliance: Comply with manufacturer's product data, including product technical bulletins, installation instructions, and product carton instructions. The latest Installation Manual can be found at www.ykkap.com.

3.02 EXAMINATION

A. Site Verification of Conditions: Verify conditions (which have been previously installed under other sections) are acceptable for product installation in accordance with manufacturer's instructions.

3.03 PREPARATION

A. Adjacent Surfaces Protection: Protect adjacent work areas and finish surfaces from damage during product installation.

3.04 INSTALLATION

A. General: Install manufacturer's system in accordance with shop drawings, and within specified tolerances.

1. Protect aluminum members in contact with masonry, steel, concrete, or dissimilar materials using nylon pads or bituminous coating.
2. Shim and brace aluminum system before anchoring to structure.
3. Verify curtain wall system allows water entering system to be collected in gutters and wept to exterior. Verify weep holes are open, and metal joints are sealed in accordance with manufacturers installation instructions.
4. Seal metal to metal curtain wall system joints using sealant recommended by system manufacturer.

3.05 FIELD QUALITY CONTROL

A. Manufacturer's Field Services: Upon request, provide manufacturer's field service consisting of site visit for inspection of product installation in accordance with manufacturer's instructions.

B. Field Test: Conduct field test to determine watertightness of curtain wall system. Conduct test in accordance with AAMA 501.2.

3.06 ADJUSTING AND CLEANING

A. Adjusting: Adjust swing doors for operation in accordance with manufacturer's recommendations.

B. Cleaning: The General Contractor shall clean installed products in accordance with manufacturer's instructions prior to owner's acceptance, and remove construction debris from project site. Legally dispose of debris.

C. Protection: The General Contractor shall protect the installed product's finish surfaces from damage during construction.

END OF SECTION 084413

SECTION 086300 - METAL FRAMED SKYLIGHTS

PART 1-GENERAL

1.1 SUMMARY

A. This section includes the following:
   1. LPGS-HU model curb-mounted, glass glazed, impact rated skylight for use in WBDR.
B. Related Sections: The following sections contain requirements that relate to this section:
   1. Division Six Section "Rough Carpentry" for wood curbs and nailers.
   2. Division Seven Section "Roof Accessories" for curbs.
   3. Division Seven Section "Flashing and Sheet Metal" for metal flashing for skylights.
C. Refer to roofing system sections for roofing accessories to be built into the roofing system to accommodate work of this section.

1.2 PERFORMANCE REQUIREMENTS

A. General: Provide glass glazed skylights capable of withstanding loads as defined by the local codes having jurisdiction where units are to be installed without failure.
B. Units shall be tested to and achieve a design pressure of +/- 80psf.
C. Units shall provide no water penetration per ASTM E 331 when tested at 15.04 psf.
D. Florida Product Approved for use in Windborne Debris Regions / Impact Rated.
E. Tested to E1886 and E1996 for Large Missile, Level D, Wind Zone 4.

1.3 SUBMITTALS

A. Product Data Sheet: For each type of skylight specified, include details of construction and installation, relative to applicable curb configuration.
B. Samples for Selection: Manufacturer's color charts showing a full range of colors available for each type of skylight glazing and Aluminum Finish.

1.4 WARRANTY

A. General: Warranties specified in this section shall not deprive the Owner of other rights the Owner may have under other provisions of the Contract Documents and shall be in addition to and run concurrent with other warranties made by the Contractor under requirements of the Contract Documents.
B. Skylight Warranty: Provide written warranty signed by manufacturer, agreeing to repair or replace work that exhibits defects in materials or workmanship and guaranteeing weather-tight and leak-free performance. "Defects" is defined as uncontrolled leakage of water and abnormal aging or deterioration.

   1. Warranty Period: 2 years from date of Substantial Completion.

C. Finish Warranty: Provide written warranty signed by manufacturer agreeing to repair or replace work with finish defects. "Defects" is defined as peeling,

chipping, chalking, fading, abnormal aging or deterioration, and failure to perform as required.

1. Warranty Period for Anodized Finish: 1 year from date of Substantial Completion.
2. Warranty Period for Powder Coat Finish: 5 years from date of Substantial Completion.
3. Warranty Period for Kynar 500 Finish: 5 years from date of Substantial Completion. (10 and 20 years available if specified)

PART 2- PRODUCTS

2.1 MANUFACTURERS

A. Basis of Design Manufacturer: Subject to compliance with requirements, provide Low Profile Single Slope Skylights by Wasco Skylights part of the Velux Group, Wells, ME (800-388-0293).
B. Approval of Comparable Products: Submit the following in accordance with project substitution requirements, within time allowed for substitution review:
    1. Product data, including certified independent test data indicating compliance with requirements.
    2. Samples of each component.
    3. Sample submittal from similar project.
    4. Project references: Minimum of five installations not less than five years old, with Owner and Architect contact information.
    5. Sample warranty.

2.2 FRAMING MATERIALS

A. Curb Frame: Extruded aluminum alloy 6063-T5 (min.) ASTM B 221 (ASTM B 221 M) with minimum effective thickness of .080 inches. Curb frame to have glass fiber reinforced polymer thermal break.
    a. Poured and de-bridged polyurethane thermal breaks are not acceptable.
B. Retainer Frame: Extruded aluminum alloy 6063-T5 (min). ASTM B 221 (ASTM B 221 M) with minimum effective thickness of 0.60 inches.
C. Support Structure Curb Mounted: Minimum 1 ½" wide at perimeter and under all rafters and purlins. Purlins can be self supporting consult manufacturer for limitations.
    a. Slope: Support structure must slope a minimum of 3:12 pitch.
D. Fasteners: Same metal as metals being fastened, or nonmagnetic stainless steel or other non-corrosive metal as recommended by Wasco Products, Inc.
E. Bituminous Coating: SSPC-Paint 12, solvent-type, bituminous mastic, nominally free of sulfur and containing no asbestos fibers, compounded for 15-mil (0.4 mm) dry film thickness per coating.

2.3 GLAZING MATERIALS

A. Insulating Glass: 1 3/16-inch-thick insulated hurricane impact resistant glass consisting of ¼ inch tempered exterior lite, 1/2-inch sealed air space and 7/16 inch laminated with .090 SGP. SB70 #2 clear Low E Argon fill.
B. Glazing Gaskets: Manufacturer's proprietary pressure-glazing gaskets of elastomer type and hardness selected by the skylight manufacturer to comply with

requirements. Glazing gaskets to be extruded thermoplastic elastomer by the skylight manufacturer.

C. Spacers, Edge Blocks and Setting Blocks: Manufacturer's standard permanent non-migrating type of elastomer type and hardness selected to comply with requirements. Spacers, Edge Blocks, and Setting Blocks to be extruded thermoplastic elastomer by the skylight manufacturer.

D. Structural Glazing Weatherseal Sealant: Single component neutral-curing silicone sealant recommended by skylight and sealant manufacturers for this use and furnished by skylight manufacturer.
    1. Sealant is capable of withstanding 50 percent movement in both extension and compression (total of 100 percent movement) when tested for adhesion and cohesion under maximum cyclic movement according to ASTM C 719.
    2. Sealant complies with ASTM C 920 for Type S, Grade NS, Class 50, Uses NT, G, A, and, as applicable to substrates including other sealants with which it comes in contact.
    3. Color: Black.

2.4 FABRICATION

A. Framing Components: As follows:
    1. Factory fit and assemble components.
    1. Fabricate components that, when assembled, will have accurately fitted joints with ends coped or mitered to produce hairline joints free of burrs and distortion.
    2. Fabricate components to drain water passing joints and to drain condensation and moisture occurring or migrating within skylight system to the exterior.
    3. Fabricate components to accommodate expansion, contraction, and field adjustment, and to provide for minimum clearance and shimming at skylight perimeter.
    4. Form shapes with sharp profiles, straight and free of defects or deformations, before finishing.
    5. Fit and secure joints by heliarc welding.

2.5 ALUMINUM FINISHES

A. General: Comply with NAAMM "Metal Finishes Manual" recommendations for application and designations of finishes.

B. Finish designations prefixed by AA conform to the system for designations of aluminum finishes established by the Aluminum Association.
    1. Color –Anodized Finish Class I: AA-C22A42/A44 complying with AAMA 611. Color: As selected by the architect from the manufacturer's full range of colors.
    2. Kynar Fluoropolymer Two-Coat System: (70% PVDF) complying with AAMA 2605. Color: As selected by the architect from the manufacturer's full range of colors. (3coat and 4 coat available)

PART 3- EXECUTION

3.1 EXAMINATION

A. Examine substrates and conditions, with installer present, for compliance with requirements for installation tolerances and other conditions affecting skylight performance.
    1. Proceed with installation only after unsatisfactory conditions have been corrected.

3.2 PREPARATION

A. Metal Protection: As follows:
    1. Where aluminum will contact dissimilar metals, protect against galvanic action by paining contact surfaces with primer or by applying sealant or tape recommended by manufacturer for this purpose.
    2. Where aluminum will contact concrete or masonry, protect against corrosion by painting contact surfaces with bituminous paint.
    3. Where aluminum will contact pressure-treated wood, separate dissimilar materials by methods recommended by manufacturer.

3.3 INSTALLATION

A. General: Comply with manufacturer's written instructions for protecting, handling, and installing skylight components.
B. Coordinate with installation of roof deck and other substrates to receive skylight units.
C. Coordinate with installation of vapor barriers, roof insulation, roofing, and flashing as required to assure that each element of the work performs properly and that combined elements are waterproof and weather tight. Anchor units securely to supporting structural substrates, adequate to withstand lateral and thermal stresses ass well as inward and outward loading pressures.
D. Counter Flashing: Where counter flashing is required as component of the skylight, install to provide an adequate waterproof overlap with roofing or roof flashing (as counter flashing). Seal with thick bead of mastic sealant, except where overlap is indicated to be left open for ventilation.

3.4 CLEANING AND PROTECTION

A. Clean exposed metal and plastic surfaces according to manufacturer's instructions during installation. Touch up damaged metal coatings.
B. Final cleaning by others.

END OF SECTION 086300

SECTION 08 71 00 – DOOR HARDWARE

PART 1 GENERAL

1.01 SECTION INCLUDES

1. Hardware for wood, aluminum, hollow metal, and miscellaneous doors as noted.
2. Hardware for fire-rated doors.
3. Thresholds.
4. Smoke and draft control seals.
5. Weatherstripping and gasketing.

1.02 RELATED REQUIREMENTS

1. Section 06 20 00 - Finish Carpentry
2. Section 08 11 16 - Aluminum Doors and Frames.
3. Section 08 43 13 - Aluminum-Framed Storefronts:
4. FRP Doors and Frames

1.03 REFERENCE STANDARDS

1. ADA Standards - Americans with Disabilities Act (ADA) Standards for Accessible Design 2010.
2. ASTM E283/E283M - Standard Test Method for Determining Rate of Air Leakage Through Exterior Windows, Skylights, Curtain Walls, and Doors Under Specified Pressure Differences Across the Specimen 2019.
3. DHI (H&S) - Sequence and Format for the Hardware Schedule 2019.
4. DHI (KSN) - Keying Systems and Nomenclature 2019.
5. DHI (LOCS) - Recommended Locations for Architectural Hardware for Standard Steel Doors and Frames 2004.
6. DHI WDHS.3 - Recommended Locations for Architectural Hardware for Flush Wood Doors 1993; also in WDHS-1/WDHS-5 Series, 1996.
7. ICC (IBC) - International Building Code Most Recent Edition Adopted by Authority Having Jurisdiction, Including All Applicable Amendments and Supplements.
8. ICC A117.1 - Accessible and Usable Buildings and Facilities 2017.
9. NFPA 70 - National Electrical Code Most Recent Edition Adopted by Authority Having Jurisdiction, Including All Applicable Amendments and Supplements.
10. NFPA 80 - Standard for Fire Doors and Other Opening Protectives 2022.
11. NFPA 101 - Life Safety Code Most Recent Edition Adopted by Authority Having Jurisdiction, Including All Applicable Amendments and Supplements.
12. NFPA 105 - Standard for Smoke Door Assemblies and Other Opening Protectives 2022.
13. NFPA 252 - Standard Methods of Fire Tests of Door Assemblies 2022.
14. UL 10C - Standard for Positive Pressure Fire Tests of Door Assemblies Current Edition, Including All Revisions.

1.04 ADMINISTRATIVE REQUIREMENTS

1. Coordinate the manufacture, fabrication, and installation of products that door hardware is installed on.
2. Sequence installation to ensure facility services connections are achieved in an orderly and expeditious manner.
3. Preinstallation Meeting: Convene a preinstallation meeting one week prior to commencing work of this section; require attendance by affected installers and the following:
   a. Architect.
   b. Hardware Supplier's Architectural Hardware Consultant (AHC).
   c. Hardware Installer.
   d. Owner's Security Consultant.
4. Furnish templates for door and frame preparation to manufacturers and fabricators of products requiring internal reinforcement for door hardware.
5. Keying Requirements Meeting:
   a. Schedule meeting at project site prior to Contractor occupancy.
   b. Attendance Required:
      i. Contractor.
      ii. Owner.
      iii. Hardware Supplier's Architectural Hardware Consultant (AHC).
      iv. Door Hardware Installer.
      v. Owner's Security Consultant.
      vi. Cylinder Manufacturer's Keying Consultant
   c. Agenda:
      i. Establish keying requirements.
      ii. Verify locksets and locking hardware are functionally correct for project requirements.
      iii. Verify that keying and programming complies with project requirements.
      iv. Establish keying submittal schedule and update requirements.
   d. Incorporate "Keying Requirements Meeting" decisions into keying submittal upon review of door hardware keying system including, but not limited to, the following:
      i. Access control requirements.
      ii. Key control system requirements.
   e. Record minutes and distribute copies within two days after meeting to participants, with two copies to Architect, Owner, participants, and those affected by decisions made.
   f. Deliver established keying requirements to manufacturers.

1.05 SUBMITTALS

1. See Section 01 30 00 - Administrative Requirements for submittal procedures.
2. Product Data: Manufacturer's catalog literature for each type of hardware, marked to clearly show products to be furnished for this project, and includes construction details, material descriptions, finishes, and dimensions and profiles of individual components.
3. Shop Drawings - Door Hardware Schedule: A detailed listing that includes each item of hardware to be installed on each door.
   a. Prepared by or under supervision of Architectural Hardware Consultant (AHC).
   b. Comply with DHI (H&S) using door numbering scheme and hardware set numbers as indicated in Contract Documents.

i. Submit in vertical format.

c. List groups and suffixes in proper sequence.

d. Include complete description for each door listed.

e. Include manufacturer's and product names, and catalog numbers; include functions, types, styles, sizes and finishes of each item.

f. Include account of abbreviations and symbols used in schedule.

4. Shop Drawings - Electrified Door Hardware: Include diagrams for power, signal, and control wiring for electrified door hardware that include details of interface with building safety and security systems. Provide elevations and diagrams for each electrified door opening as follows:
   a. Prepared by or under supervision of Architectural Hardware Consultant (AHC) and Electrified Hardware Consultant (EHC).
   b. Elevations: Include front and back elevations of each door opening showing electrified devices with connections installed and an operations narrative describing how opening operates from either side at any given time.
   c. Diagrams: Include point-to-point wiring diagrams that show each device in door opening system with related colored wire connections to each device.
5. Samples for Verification:
   a. Submit one (1) sample of hinge, latchset, lockset, closer, and [_____] illustrating style, color, and finish.
   b. Architect will return full-size samples to Contractor.
   c. Include product description with samples.
6. Manufacturer's Installation Instructions: Indicate special procedures and perimeter conditions requiring special attention.
7. Maintenance Data: Include data on operating hardware, lubrication requirements, and inspection procedures related to preventative maintenance.
   a. Bitting List: List of combinations as furnished.
8. Keying Schedule:
   a. Submit three (3) copies of Keying Schedule in compliance with requirements established during Keying Requirements Meeting unless otherwise indicated.
9. Warranty: Submit manufacturer's warranty and ensure that forms have been completed in Owner's name and registered with manufacturer.
10. Maintenance Materials and Tools: Furnish the following for Owner's use in maintenance of project.
    a. See Section 01 60 00 - Product Requirements, for additional provisions.
    b. Tools: One set of each special wrench or tool applicable for each different or special hardware component, whether supplied by hardware component manufacturer or not.

1.06 QUALITY ASSURANCE

1. Standards for Fire-Rated Doors: Maintain one copy of each referenced standard on site, for use by Architect and Contractor.
2. Installer Qualifications: Company specializing in performing work of the type specified for commercial door hardware with at least three years of documented experience.
3. Supplier Qualifications: Company with certified Architectural Hardware Consultant (AHC) and Electrified Hardware Consultant (EHC) to assist in work of this section.

1.07 DELIVERY, STORAGE, AND HANDLING

1. Package hardware items individually; label and identify each package with door opening code to match door hardware schedule.

1.08 WARRANTY

1. Manufacturer Warranty: Provide manufacturer warranty against defects in material and workmanship for period indicated, from Date of Substantial Completion. Complete forms in Owner's name and register with manufacturer.
   a. Closers: Twenty Five, minimum.
   b. Exit Devices: Five years, minimum.
   c. Locksets and Cylinders: Three years, minimum.
   d. Other Hardware: Two years, minimum.

PART 2 PRODUCTS

2.01 GENERAL REQUIREMENTS

1. Provide specified door hardware as required to make doors fully functional, compliant with applicable codes, and secure to extent indicated.
2. Door Pulls and Push Plates:
   a. Provide door pulls and push plates on doors without a lockset, latchset, exit device, or auxiliary lock unless otherwise indicated.
3. Closers:
   a. Provide door closer on each exterior door, unless otherwise indicated.
   b. Provide door closer on each fire-rated and smoke-rated door.
4. Thresholds:
   a. Exterior Applications: Provide at each exterior door, unless otherwise indicated.
5. Smoke and Draft Control Seals:
   a. Provide gasketing for smoke and draft control doors (Indicated as "S" on Drawings) that complies with local codes, requirements of assemblies tested in accordance with UL 1784.
6. Weatherstripping and Gasketing:
   a. Provide weatherstripping on each exterior door at head, jambs, and meeting stiles of door pairs, unless otherwise indicated.
   b. Provide door bottom sweep on each exterior door, unless otherwise indicated.
   c. Fabricate as continuous gasketing, do not cut or notch gasketing material.
7. Electrically Operated and/or Controlled Hardware: Provide necessary power supplies, power transfer hinges, relays, and interfaces as required for proper operation; provide wiring between hardware and control components and to building power connection in compliance with NFPA 70.
8. Fasteners:
   a. Provide fasteners of proper type, size, quantity, and finish that comply with commercially recognized standards for proposed applications.
   b. Provide machine screws for attachment to reinforced hollow metal and aluminum frames.
   c. Provide stainless steel machine screws and lead expansion shields for concrete and masonry substrates.
   d. Provide wall grip inserts for hollow wall construction.

e. Fire-Resistance-Rated Applications: Comply with NFPA 80.
f. Concealed Fasteners: Do not use through or sex bolt type fasteners on door panel sides indicated as concealed fastener locations, unless otherwise indicated or required per manufacturer's testing requirements.

2.02 PERFORMANCE REQUIREMENTS

1. Provide door hardware products that comply with the following requirements:
   a. Applicable provisions of federal, state, and local codes.
   b. ICC (IBC).
   c. NFPA 101.
   d. Local codes as required.
2. Accessibility: ADA Standards and ICC A117.1.
3. Fire-Resistance-Rated Doors: NFPA 80, listed and labeled by qualified testing agency for fire protection ratings indicated, based on testing at positive pressure in accordance with NFPA 252 or UL 10C.
4. Hardware Preparation for Steel Doors and Steel Frames: BHMA A156.115.
5. Hardware Preparation for Wood Doors with Wood or Steel Frames: BHMA A156.115W.
6. Regulatory and Operational Requirements:
   a. Provide hardware for all openings, whether specified or not, in compliance with NFPA Standard No. 80, proper operation and local building code requirements. Where required, provide only hardware which has been tested and listed by UL or FM for types and sizes of doors required and complies with requirements of door and door frame labels. Label hardware, as required, for compliance with pressure testing criteria as dictated in IBC.
   b. Provide hardware which meets or exceeds handicap accessibility per local building code requirements. Conform to the Americans with Disabilities Act (ADA) of 1990 as amended by the D.O.J. September 15, 2010, as adopted by the Authority Having Jurisdiction (AHJ).
   g. Products Requiring Electrical Connection: Listed and classified by UL (DIR) as suitable for the purpose specified.

2.03 HINGES

A. Manufacturers:
   1. Listed in Door Hardware Schedule: Best
   2. Substitutions: Hager, McKinney
   3. Continuous hinges are as manufactured by Best. Equals by ABH or Select are acceptable.

B. Butt Hinges: As applicable to each item specified.
   1. Standard Weight Hinges: Minimum of two (2) permanently lubricated non-detachable bearings.
   2. Heavy Weight Hinges: Minimum of four (4) permanently lubricated bearings on heavy weight hinges.
   3. Template screw hole locations.
   4. Pins: Easily seated, non-rising pins.
   5. UL 10C listed for fire-resistance-rated doors.

C. Finishes: See Door Hardware Schedule.

D. Grades:
   1. Butt Hinges: Comply with BHMA A156.1 and BHMA A156.7 for templated hinges.

E. Types:
   1. Butt Hinges: Include full mortise hinges.

F. Options: As applicable to each item specified.

G. Quantities:
   1. Butt Hinges: Three (3) hinges per leaves up to 90 inches in height. Add one (1) for each additional 30 inches in height or fraction thereof.
      a. Hinge weight and size unless otherwise indicated in hardware sets:
         1) For doors up to 36 inches wide and up to 1-3/4 inches thick provide hinges with a minimum thickness of 0.134 inch and a minimum of 4-1/2 inches in height.
         2) For doors from 36 inches wide up to 42 inches wide and up to 1-3/4 inches thick provide hinges with a minimum thickness of 0.145 inch and a minimum of 4-1/2 inches in height.
         3) For doors from 42 inches wide up to 48 inches wide and up to 1-3/4 inches thick provide hinges with a minimum thickness of 0.180 inch and a minimum of 5 inches in height.
         4) For doors greater than 1-3/4 inches thick provide hinges with a minimum thickness of 0.180 inch and a minimum of 5 inches in height.
   2. Continuous Hinges: One per door leaf.

H. Applications: At swinging doors.
   1. Provide non-removable pins at out-swinging doors with locking hardware and all exterior doors.

I. Products:
   1. Butt Hinges:
      a. Concealed or Exposed bearing, five (5) knuckles.
      b. Plain Bearing, Five (5) Knuckle.

2.04 LOCK CYLINDERS

A. Manufacturers:
   1. Listed in Door Hardware Schedule: Best

B. Properties:
   1. Lock Cylinders: Provide key access on outside of each lock, unless otherwise indicated.
      a. Provide cylinders from same manufacturer as locking device.
      b. Provide cams and/or tailpieces as required for locking devices.
      c. Provide cylinders with appropriate format interchangeable cores where indicated.

C. Material:
   1. Manufacturer's standard corrosion-resistant brass alloy.

D. Products:
   1. Rim/mortise.

2.05 KEYS AND CORES

A. Manufacturers:
   1. Listed in Door Hardware Schedule: Best Cormax Patented
   2. Substitutions: None – facility standard

B. Properties: Complying with guidelines of BHMA A156.28.
   1. Provide small format interchangeable core.
   2. Provide keying information in compliance with DHI (KSN) standards.

3. Keying Schedule: Arrange for a keying meeting, with Architect, Owner and hardware supplier, and other involved parties to ensure locksets and locking hardware, are functionally correct and keying complies with project requirements.
4. Keying: Master keyed.
5. Include construction keying and control keying with removable core cylinders.
6. Do not make brass construction cores and construction control and operating keys a part of Owner's permanent keying system, nor furnish in the same keyway (or key section) as Owner, permanent keying system.
7. Key to new keying system.
8. Supply keys in following quantities:
   a. Grand Master Keys: 1 each.
   b. Master Keys: 4 each.
   c. Construction Master Keys: 2 each.
   d. Construction Keys: 15 each.
   e. Construction Control Keys: 1 each.
   f. Control Keys if New System: 1 each.
   g. Change Keys: 2 each for each keyed core.
9. Provide key collection envelopes, receipt cards, and index cards in quantity suitable to manage number of keys.
10. Deliver keys with identifying tags to Owner by security shipment direct from manufacturer.
11. Permanent Keys and Cores: Stamped with applicable key marking for identification. Do not include actual key cuts within visual key control marks or codes. Stamp permanent keys "Do Not Duplicate."
12. Include installation of permanent cores and return construction cores to hardware supplier. Construction cores and keys to remain property of hardware supplier.

2.06 MORTISE LOCKS

A. Manufacturers:
   1. Listed in Door Hardware Schedule: Accurate 9100M Marine Grade

B. Properties:
   1. Mechanical Locks: Manufacturer's standard.
      a. Fitting modified ANSI A115.1 door preparation.
      b. Door Thickness Coordination Fitting 1-3/4 inch to 2-1/4-inch-thick doors.
      c. Latch: Solid, one-piece, anti-friction, self-lubricating stainless steel.
      1. Latch bolt Throw: 3/4-inch, minimum.
      d. Auxiliary Deadlatch: One-piece stainless steel, permanently lubricated.
      e. Backset: 2-3/4 inch.
      f. Lever Trim:
         1) Functionality: Allow the lever handle to move up to 45 degrees from horizontal position prior to engaging the latch bolt assembly.
         2) Strength: Locksets outside locked lever designed to withstand minimum 1,400 inch-lbs of torque. In excess of that, a replaceable part will shear. Key from outside and/or inside lever will still operate lockset.
         3) Spindle: Designed to prevent forced entry from attacking of lever.
         4) Independent spring mechanism for each lever.
            (a) Trim to be self-aligning and thru-bolted.

C. Finishes: See Door Hardware Schedule.

2.07 EXIT DEVICES

A. Manufacturers:
   1. Listed in Door Hardware Schedule: Precision
   2. Substitutions: Sargent, Von Duprin

B. Properties:
   1. Touchpads: 'T" style metal touchpads and rail assemblies with matching chassis covers end caps.
   2. Latch Bolts: Stainless steel deadlocking with 3/4 inch projection using latch bolt.
   3. Cylinder: Include where cylinder dogging or locking trim is indicated.
   4. Strike as recommended by manufacturer for application indicated.
   5. Sound dampening on touch bar.
   6. Dogging:
      i. Non-Fire-Resistance-Rated Devices: Cylinder dogging.
      ii. Fire-Resistance-Rated Devices, electrical rooms: Manual dogging not permitted.
   7. Handing: Field-reversible.

C. Grades: Complying with BHMA A156.3, Grade 1.

D. Standards Compliance:
   1. Provide UL (DIR) listed exit device assemblies for fire-resistance-rated doors.
   2. Comply with UL 10C.

E. Code Compliance: As required by authorities having jurisdiction in the State in which the Project is located.

2.08 DOOR PULLS AND PUSH PLATES

F. Manufacturers:
   1. Listed in Door Hardware Schedule: Trimco
   2. Substitutions: Rockwood, Ives

G. Properties:
   1. Pull Type: Straight, unless otherwise indicated.
   2. Push Plate Type: Flat, with square corners, unless otherwise indicated.

H. Grades: Comply with BHMA A156.6.

I. Material: Grade 316 Stainless steel, unless otherwise indicated.

J. Products:
   1. Push-Pull Systems.

2.09 CLOSERS

A. Manufacturers:
   1. Listed in Door Hardware Schedule: Dorma STA 8916
   2. Substitutions: Norton 7500SS
   3. Double acting concealed closer will be Dorma RTS Series.

B. Properties:
   1. Surface Mounted Closers: Manufacturer's standard.
      a. Construction : Non corrosive aluminum alloy.
      b. Covers and Arms:
         1) Type: Standard for product selected.
            (a) Full.
         2) Material: Stainless Steel

3) Finish: Brushed

C. Grades:
1. Closers: Comply with BHMA A156.4, Grade 1.
a. Underwriters Laboratories Compliance:
b. Testing Standards Compliance: Meeting requirements of UL 10C for positive pressure.

D. Code Compliance: As required by authorities having jurisdiction in the State in which the Project is located.

E. Types:
1. Rack-and-pinion, surface-mounted. 1-1/2 inches (36MM) minimum bore.

F. Installation:
1. Mounting: Includes surface mounted installations.
2. Mount closers on non-public side of door and stair side of stair doors unless otherwise noted in hardware sets.
3. At outswinging exterior doors, mount closer on interior side of door.
4. Provide adapter plates, shim spacers, and blade stop spacers as required by frame and door conditions.
5. Where an overlapping astragal is included on pairs of swinging doors, provide coordinator to ensure door leaves close in proper order when automatic flush bolts are used

2.10 PROTECTION PLATES

A. Manufacturers:
1. Listed in Door Hardware Schedule: Trimco
2. Substitutions: Rockwood, Ives

B. Properties:
1. Plates:
iii. Kick Plates: Provide along bottom edge of push side of every wood door with closer, except aluminum storefront and glass entry doors, unless otherwise indicated.
iv. Edges: Beveled, on four (4) unless otherwise indicated.

C. Grades: Comply with BHMA A156.6.

D. Material: As indicated for each item by BHMA material and finish designation.
1. Metal Properties: Grade 316 Stainless steel.

E. Installation:
1. Fasteners: Countersunk screw fasteners

2.11 STOPS AND HOLDERS

A. Manufacturers:
1. Listed in Door Hardware Schedule: Trimco
2. Substitutions: Rockwood, Ives, Don Jo

B. General: Provide overhead stop/holder when wall or floor stop is not feasible.

C. Grades:
1. Door Holders, Wall Bumpers, and Floor Stops: Comply with BHMA A156.16 and Resilient Material Retention Test as described in this standard.

D. Material: Base metal as indicated for each item by BHMA material and finish designation.

E. Types:
   1. Wall Bumpers: Bumper, concave, wall stop.
   2. Floor Stops: Provide with rubber bumper floor stop, heavy duty as specified.

F. Installation:
   1. Non-Masonry Walls: Confirm adequate wall reinforcement has been installed to allow lasting installation of wall bumpers.

2.12 WEATHERSTRIPPING AND GASKETING

A. Manufacturers:
   1. Listed in Door Hardware Schedule: National Guard
   2. Substitutions: Reese, Pemko

B. Grades: Comply with BHMA A156.22.

C. Products:
   1. Weatherstripping: See Door Hardware Schedule.
   2. Door Bottom Seals:
      v. Door Sweeps: See Door Hardware Schedule.
      vi. Door Shoes: See Door Hardware Schedule.
   3. Thresholds will be stainless steel with stainless steel fasteners.

2.13 FINISHES

A. Finishes: Provide door hardware of same finish, unless otherwise indicated.
   1. Finish: 630; satin stainless steel. 630W; weatherized satin stainless steel. 626W; weatherized satin chromium plated with brass base material and 689; aluminum painted, with any base material

PART 3 EXECUTION

3.01 EXAMINATION

A. Verify that doors and frames are ready to receive this work; labeled, fire-rated doors and frames are properly installed, and dimensions are as indicated on shop drawings.

B. Correct all defects prior to proceeding with installation.

C. Verify that electric power is available to power operated devices and of correct characteristics.

3.02 INSTALLATION

A. Install hardware in accordance with manufacturer's instructions and applicable codes.

B. Install hardware using the manufacturer's fasteners provided. Drill and tap all screw holes located in metallic materials. Do not use "Riv-Nuts" or similar products.

C. Install hardware on fire-rated doors and frames in accordance with applicable codes and NFPA 80.

D. Install hardware for smoke and draft control doors in accordance with NFPA 105.

E. Use templates provided by hardware item manufacturer.

F. Do not install surface mounted items until application of finishes to substrate are fully completed.

G. Wash down masonry walls and complete painting or staining of doors and frames.

H. Complete finish flooring prior to installation of thresholds.

I. Door Hardware Mounting Heights: Distance from finished floor to center line of hardware item. As indicated in following list; unless noted otherwise in Door Hardware Schedule or on drawings.
   1. For Steel Doors and Frames: Install in compliance with DHI (LOCS) recommendations.
   2. For Wood Doors: Install in compliance with DHI WDHS.3 recommendations.
   3. Mounting heights in compliance with operational and ADA Standards:

J. Set exterior door thresholds with full-width bead of elastomeric sealant at each point of contact with floor providing a continuous weather seal; anchor thresholds with stainless steel countersunk screws.

K. Include in installation for existing doors and frames any necessary field modification and field preparation of doors and frames for new hardware. Provide necessary fillers, reinforcements, and fasteners for mounting new hardware and to cover existing door and frame preparations.

3.03 FIELD QUALITY CONTROL

A. Perform field inspection and testing under provisions of Section 01 40 00 - Quality Requirements.

B. Provide an Architectural Hardware Consultant (AHC) to inspect installation and certify that hardware and installation has been furnished and installed in accordance with manufacturer's instructions and as specified.

3.04 ADJUSTING

A. Adjust work under provisions of Section 01 70 00 - Execution and Closeout Requirements.

3.05 CLEANING

A. Clean finished hardware in accordance with manufacturer's written instructions after final adjustments have been made.

B. Clean adjacent surfaces soiled by hardware installation activities.

C. Replace items that cannot be cleaned to manufacturer's level of finish quality at no additional cost.

D. See Section 01 74 19 - Construction Waste Management and Disposal, for additional requirements.

3.06 PROTECTION

A. Protect finished Work under provisions of Section 01 70 00 - Execution and Closeout Requirements.

B. Do not permit adjacent work to damage hardware or finish.

3.07 MAINTENANCE

A. Approximately six months after the acceptance of hardware in each area, the hardware installer shall:
   1. Return to the project and re-adjust every item of hardware to restore proper function of doors and hardware.
   2. Consult with and instruct Owner's personnel in recommended additions to the maintenance procedures.
   3. Replace hardware items which have deteriorated or failed due to faulty design, materials or installation of hardware units.

4. Prepare a written report of current and predictable problems (of substantial nature) in the performance of the hardware and submit to the Architect.

3.08 HARDWARE SCHEDULE

MANUFACTURERS

Code	Name	
AC	Accurate Hardware	Marine Grade Mortise Locks
BE	Best Access Systems	Hinges, Cylinders
DM	Dorma	Closers
NA	National Guard	Gaskets, Thresholds
PR	Precision	Exit Devices
TR	Trimco	Door Stops, Flat Goods

FINISH LIST

Code	Description
628	Satin Anodized Aluminum
626	Satin Chromium Plated
626W	Weatherized Satin Chrome
630	Satin Stainless Steel
630W	Stainless Steel, Weatherized
689	Aluminum Painted

OPTIONS

	Code	Description
2.	CD	Cylinder Dogging (Precision)
3.	LD	Less Dogging (Precision)
4.	BFI	Barrier Free – 5 lb. (Dorma)
5.	N Mounting	Spanner Through Bolt Attachment (Trimco)
6.	B4E	Beveled 4 Edges – Kick, Mop & Armor Plates Trimco)
7.	CS	Counter Sinking Of Kick, Mop & Armor Plates (Trimco)
8.	SSMS/EA	Stainless Machine Screws/Expansion Anchors (NGP)

9.

Set #1 - Entry

Doors: 101, 101A, 101B

Set #1 - Entry

1	Continuous Hinge	661HD	628	BE
1	Exit Device	2403 CD	626W	PR
1	Rim Cylinder	12E-72 PATD	626	BE
1	Mortise Cylinder	1E-74 PATD	626	BE
1	Door Pull	1191-4 Type N Mounting 316SS	630	TR
1	Closer	STA 8916 ARP DP89	630	DM
1	Floor Stop	1214	626	TR
1	Door Sweep	200 SB		NA
1	Threshold	512 SS SSMS/EA	630	NA

NOTE: Perimeter gaskets by opening assembly manufacturer. Verify threshold application.

Set #2 - Coiling

Doors: 101C, 101D, 101E, 101F, 101G, 101H

1	Mortise Cylinder	1E-74 PATD	626	BE

NOTE: Balance by door manufacturer.

Set #3 - Mechanical/Electrical

Doors: 103

1	Continuous Hinge	661HD	628	BE
1	Exit Device	2103 X 4903B LD	626W	PR
1	Rim Cylinder	12E-72 PATD	626	BE
1	Closer	STA 8916 ARP	630	DM
1	Kick Plate	K0050 8" x 2" LDW B4E CS	630	TR
1	Floor Stop	1214	626	TR
1	Door Sweep	200 SB		NA
1	Threshold	512 SS SSMS/EA	630	NA

NOTE: Perimeter gaskets by aluminum frame manufacturer. Verify threshold application.

Set #4 - Storage

Doors: 104

3	Hinges	CB191 4.5" x 4.5"	630W	BE
1	Storeroom Lockset	9159M.234 x 18L	630	AC
1	Mortise Cylinder	1E-74 PATD	626	BE
1	Wall Bumper	1270WV	630	TR
1	Gasketing	5050 B Head & Jambs		NA

Set #4A - Storage

Doors: 105, 107

3	Hinges	CB191 4.5" x 4.5"	630W	BE
1	Storeroom Lockset	9159M.234 x 18L	630	AC
1	Mortise Cylinder	1E-74 PATD	626	BE
1	Floor Stop	1215CKU	626	TR
1	Gasketing	5050 B Head & Jambs		NA

Set #5 - Scullery

Doors: 106

1	Continuous Hinge	661HD	628	BE
1	Exit Device	2108 x V2108B CD	626W	PR
1	Rim Cylinder	12E-72 PATD	626	BE
1	Mortise Cylinder	1E-74 PATD	626	BE
1	Closer	STA 8916 ARP	630	DM
1	Kick Plate	K0050 8" x 2" LDW B4E CS	630	TR
1	Floor Stop	1214	626	TR
1	Door Sweep	200 SB		NA
1	Threshold	512 SS SSMS/EA	630	NA

NOTE: Perimeter gaskets by aluminum frame manufacturer. Verify threshold application.

Set #6 - Scullery

Doors: 106A

1	Concealed Closer	RTS/05 BFI W2	689	DM
2	Push Plates	1001-9	630	TR
2	Kick Plates	K0050 8" x 2" LDW B4E CS	630	TR
1	Wall Bumper	1270WV	630	TR
1	Floor Stop	1215CKU	626	TR

Set #7 - Sprinkler

Doors: 202

3	Hinges	CB191 4.5" x 4.5"	630W	BE
1	Storeroom Lockset	9159M.234 x 18L	630	AC
1	Mortise Cylinder	1E-74 PATD	626	BE
1	Closer	STA 8916 AR	630	DM
1	Kick Plate	K0050 8" x 2" LDW B4E CS	630	TR
1	Wall Bumper	1270WV	630	TR
1	Gasketing	5050 B Head & Jambs		NA

Set #8 - Mechanical

Doors: 201

3	Hinges	CB191 4.5" x 4.5" NRP	630W	BE
1	Storeroom Lockset	9159M.234 x 18L	630	AC
1	Mortise Cylinder	1E-74 PATD	626	BE
1	Closer	STA 8916 ARP	630	DM
1	Kick Plate	K0050 8" x 2" LDW B4E CS	630	TR
1	Wall Bumper	1270WV	630	TR
1	Gasketing	5050 B Head & Jambs		NA

END OF SECTION

SECTION 092900 - GYPSUM BOARD

PART 1 - GENERAL

1.1 RELATED DOCUMENTS

A. Drawings and general provisions of the Contract, including General and Supplementary Conditions and Division 01 Specification Sections, apply to this Section.

1.2 SUMMARY

A. This Section includes the following:

1. Tile backing panels.

B. Related Sections include the following:

1. Division 06 Section "Rough Carpentry" for wood furring that supports gypsum board.
2. Division 06 Section "Sheathing" for gypsum sheathing.
3. Division 07 Section "Thermal Insulation" for insulation and vapor retarders installed in assemblies that incorporate gypsum board.
4. Division 09 painting Sections for primers applied to gypsum board surfaces.

1.3 SUBMITTALS

A. Product Data: For each type of product indicated.

B. Samples: For the following products:

1. Trim Accessories: Full-size Sample in 12-inch- (300-mm-) long length for each trim accessory indicated.

1.4 QUALITY ASSURANCE

A. Fire-Resistance-Rated Assemblies: For fire-resistance-rated assemblies, provide materials and construction identical to those tested in assembly indicated according to ASTM E 119 by an independent testing agency.

B. STC-Rated Assemblies: For STC-rated assemblies, provide materials and construction identical to those tested in assembly indicated according to ASTM E 90 and classified according to ASTM E 413 by an independent testing agency.

1.5 STORAGE AND HANDLING

A. Store materials inside under cover and keep them dry and protected against damage from weather, condensation, direct sunlight, construction traffic, and other causes. Stack panels flat to prevent sagging.

1.6 PROJECT CONDITIONS

A. Environmental Limitations: Comply with ASTM C 840 requirements or gypsum board manufacturer's written recommendations, whichever are more stringent.

B. Do not install interior products until installation areas are enclosed and conditioned.

C. Do not install panels that are wet, those that are moisture damaged, and those that are mold damaged.

1. Indications that panels are wet or moisture damaged include, but are not limited to, discoloration, sagging, or irregular shape.
2. Indications that panels are mold damaged include, but are not limited to, fuzzy or splotchy surface contamination and discoloration.

PART 2 - PRODUCTS

2.1 PANELS, GENERAL

A. Size: Provide in maximum lengths and widths available that will minimize joints in each area and that correspond with support system indicated.

2.2 GYPSUM BOARD

A. Glass-Mat Gypsum Sheathing Board: ASTM C 1177/C 1177M.

1. Product: Subject to compliance with requirements, provide "Dens-Glass Gold" by G-P Gypsum.
2. Core: 5/8 inch (15.9 mm), Type X.

2.3 TILE BACKING PANELS

A. Cementitious Backer Panel:
1. Basis of Design: Subject to compliance with project requirements, the design is based on the following: USG Corporation, LLC," USG Durock Cement Board".
2. Classification: Cementitious Backer Units: ANSI A118.9, ASTM A108.11 and ASTM C 1325 provide with manufacturer's standard edges.
   a. Thickness: 5/8 inch (15.9 mm).
   b. Board Length: 5 feet (1524 mm) or 8 feet (2438 mm).
   c. Board Width: As required.
   d. Mold Resistance: ASTM D 3273, score of 10 as rated according to ASTM D 3274.

3. Minimum bending radius: 6 feet (1830 mm).
4. Fastener Requirements: Provide fasteners of size and type indicated that comply with requirements specified in this Article for material and application.
   a. Screws for Fastening Gypsum Sheathing to Cold-Formed Metal Framing: DUROCK Brand Steel or USG Sheathing SF steel drill screws 1-5/8 inch with corrosion-resistant coating.

2.4 TRIM ACCESSORIES

A. Interior Trim: ASTM C 1047.

1. Material: Galvanized or aluminum-coated steel sheet or rolled zinc.
2. Shapes:

   a. Cornerbead.
   b. LC-Bead: J-shaped; exposed long flange receives joint compound.
   c. Expansion (control) joint.

B. Aluminum Trim: Extruded accessories of profiles and dimensions indicated.

1. Available Manufacturers: Subject to compliance with requirements, manufacturers offering products that may be incorporated into the Work include, but are not limited to, the following:

   a. Fry Reglet Corp.
   b. Gordon, Inc.
   c. Pittcon Industries.

2. Aluminum: Alloy and temper with not less than the strength and durability properties of ASTM B 221 (ASTM B 221M), Alloy 6063-T5.
3. Finish: Corrosion-resistant primer compatible with joint compound and finish materials specified

2.5 JOINT TREATMENT MATERIALS

A. General: Comply with ASTM C 475/C 475M.

B. Joint Tape:

1. Glass-Mat Gypsum Sheathing Board: 10-by-10 glass mesh.
2. Tile Backing Panels: As recommended by panel manufacturer.

C. Joint Compound for Interior Gypsum Wallboard: For each coat use formulation that is compatible with other compounds applied on previous or for successive coats.

1. Prefilling: At open joints, rounded or beveled panel edges, and damaged surface areas, use setting-type taping compound.
2. Embedding and First Coat: For embedding tape and first coat on joints, fasteners, and trim flanges, use drying-type, all-purpose compound.

a. Use setting-type compound for installing paper-faced metal trim accessories.

3. Fill Coat: For second coat, use drying-type, all-purpose compound.
4. Finish Coat: For third coat, use drying-type, all-purpose compound.

D. Joint Compound:

1. Glass-Mat Gypsum Sheathing Board: As recommended by sheathing board manufacturer..

E. Joint Compound for Tile Backing Panels:

1. Water-Resistant Gypsum Backing Board: Use setting-type taping compound and setting-type, sandable topping compound.
2. Glass-Mat, Water-Resistant Backing Panel: As recommended by backing panel manufacturer.
3. Cementitious Backer Units: As recommended by backer unit manufacturer.

2.6 AUXILIARY MATERIALS

A. General: Provide auxiliary materials that comply with referenced installation standards and manufacturer's written recommendations.

B. Laminating Adhesive: Adhesive or joint compound recommended for directly adhering gypsum panels to continuous substrate.

1. Use adhesives that have a VOC content of 50 g/L or less when calculated according to 40 CFR 59, Subpart D (EPA Method 24).

C. Steel Drill Screws: ASTM C 1002, unless otherwise indicated.

1. Use screws complying with ASTM C 954 for fastening panels to steel members from 0.033 to 0.112 inch (0.84 to 2.84 mm) thick.
2. For fastening cementitious backer units, use screws of type and size recommended by panel manufacturer.

D. Sound Attenuation Blankets: ASTM C 665, Type I (blankets without membrane facing) produced by combining thermosetting resins with mineral fibers manufactured from glass, slag wool, or rock wool.

1. Fire-Resistance-Rated Assemblies: Comply with mineral-fiber requirements of assembly.
2. Recycled Content: Provide blankets with recycled content such that postconsumer recycled content plus one-half of preconsumer recycled content constitutes a minimum of 10 percent by weight.

E. Acoustical Sealant: As specified in Division 07 Section "Joint Sealants."

1. Provide sealants that have a VOC content of 250 g/L or less when calculated according to 40 CFR 59, Subpart D (EPA Method 24).

F. Thermal Insulation: As specified in Division 07 Section "Thermal Insulation."

G. Vapor Retarder: As specified in Division 07 Section "Thermal Insulation."

PART 3 - EXECUTION

3.1 EXAMINATION

A. Examine areas and substrates, with Installer present, and including welded hollow-metal frames and framing, for compliance with requirements and other conditions affecting performance.

B. Examine panels before installation. Reject panels that are wet, moisture damaged, and mold damaged.

C. Proceed with installation only after unsatisfactory conditions have been corrected.

3.2 APPLYING AND FINISHING PANELS, GENERAL

A. Comply with ASTM C 840.

B. Install ceiling panels across framing to minimize the number of abutting end joints and to avoid abutting end joints in central area of each ceiling. Stagger abutting end joints of adjacent panels not less than one framing member.

C. Install panels with face side out. Butt panels together for a light contact at edges and ends with not more than 1/16 inch (1.5 mm) of open space between panels. Do not force into place.

D. Locate edge and end joints over supports, except in ceiling applications where intermediate supports or gypsum board back-blocking is provided behind end joints. Do not place tapered edges against cut edges or ends. Stagger vertical joints on opposite sides of partitions. Do not make joints other than control joints at corners of framed openings.

E. Form control and expansion joints with space between edges of adjoining gypsum panels.

F. Cover both faces of support framing with gypsum panels in concealed spaces (above ceilings, etc.), except in chases braced internally.

1. Unless concealed application is indicated or required for sound, fire, air, or smoke ratings, coverage may be accomplished with scraps of not less than 8 sq. ft. (0.7 sq. m) in area.
2. Fit gypsum panels around ducts, pipes, and conduits.

3. Where partitions intersect structural members projecting below underside of floor/roof slabs and decks, cut gypsum panels to fit profile formed by structural members; allow 1/4- to 3/8-inch- (6.4- to 9.5-mm-) wide joints to install sealant.

G. Isolate perimeter of gypsum board applied to non-load-bearing partitions at structural abutments, except floors. Provide 1/4- to 1/2-inch- (6.4- to 12.7-mm-) wide spaces at these locations, and trim edges with edge trim where edges of panels are exposed. Seal joints between edges and abutting structural surfaces with acoustical sealant.

H. Attachment to Framing: Attach panels so leading edge or end of each panel is attached to open (unsupported) edges of stud flanges first.

I. STC-Rated Assemblies: Seal construction at perimeters, behind control joints, and at openings and penetrations with a continuous bead of acoustical sealant. Install acoustical sealant at both faces of partitions at perimeters and through penetrations. Comply with ASTM C 919 and with manufacturer's written recommendations for locating edge trim and closing off sound-flanking paths around or through assemblies, including sealing partitions above acoustical ceilings.

3.3 APPLYING GYPSUM BOARD

A. Install interior gypsum board in the following locations:
   1. Type X: Vertical surfaces, unless otherwise indicated.
   2. Ceiling Type: Ceiling surfaces.
   3. Abuse-Resistant Type: See drawings for locations.
   4. Moisture and Mold-Resistant Type: See drawings for locations.

B. Single-Layer Application:

   1. On ceilings, apply gypsum panels before wall/partition board application to greatest extent possible and at right angles to framing, unless otherwise indicated.
   2. On partitions/walls, apply gypsum panels vertically (parallel to framing), unless otherwise indicated or required by fire-resistance-rated assembly, and minimize end joints.

      a. Stagger abutting end joints not less than one framing member in alternate courses of panels.
      b. At stairwells and other high walls, install panels horizontally, unless otherwise indicated or required by fire-resistance-rated assembly.

   3. On Z-furring members, apply gypsum panels vertically (parallel to framing) with no end joints. Locate edge joints over furring members.
   4. Fastening Methods: Apply gypsum panels to supports with steel drill screws.

C. Multilayer Application:

   1. On ceilings, apply gypsum board indicated for base layers before applying base layers on walls/partitions; apply face layers in same sequence. Apply base layers at right angles to framing members and offset face-layer joints 1 framing member, 16 inches (400 mm) minimum, from parallel base-layer joints, unless otherwise indicated or required by fire-resistance-rated assembly.

2. On partitions/walls, apply gypsum board indicated for base layers and face layers vertically (parallel to framing) with joints of base layers located over stud or furring member and face-layer joints offset at least one stud or furring member with base-layer joints, unless otherwise indicated or required by fire-resistance-rated assembly. Stagger joints on opposite sides of partitions.
3. On Z-furring members, apply base layer vertically (parallel to framing) and face layer either vertically (parallel to framing) or horizontally (perpendicular to framing) with vertical joints offset at least one furring member. Locate edge joints of base layer over furring members.
4. Fastening Methods: Fasten base layers and face layers separately to supports with screws.

D. Laminating to Substrate: Where gypsum panels are indicated as directly adhered to a substrate (other than studs, joists, furring members, or base layer of gypsum board), comply with gypsum board manufacturer's written recommendations and temporarily brace or fasten gypsum panels until fastening adhesive has set.

3.4 APPLYING TILE BACKING PANELS

A. Water-Resistant Gypsum Backing Board: Install at showers, tubs, and where indicated. Install with 1/4-inch (6.4-mm) gap where panels abut other construction or penetrations.

B. Glass-Mat, Water-Resistant Backing Panel: Comply with manufacturer's written installation instructions and install at locations indicated to receive tile and at toilets and janitors' closets. Install with 1/4-inch (6.4-mm) gap where panels abut other construction or penetrations.

C. Areas Not Subject to Wetting: Install regular-type gypsum wallboard panels to produce a flat surface except at showers, tubs, and other locations indicated to receive water-resistant panels.

D. Where tile backing panels abut other types of panels in same plane, shim surfaces to produce a uniform plane across panel surfaces.

3.5 INSTALLING TRIM ACCESSORIES

A. General: For trim with back flanges intended for fasteners, attach to framing with same fasteners used for panels. Otherwise, attach trim according to manufacturer's written instructions.

B. Control Joints: Install control joints according to ASTM C 840 and in specific locations approved by Architect for visual effect.

1. Movement joints for interior applications shall be placed at least every 20 to 25 ft (6.1 to 7.6 m) in each direction.

2. Movement joints for tilework exposed to direct sunlight or moisture shall be placed at least every 8 to 12 ft (2.4 to 3.7 m) in each direction.

3. Seal control & expansion joints with 100% silicone, urethane or polysulfide sealant.

C. Interior Trim: Install in the following locations:

1. Cornerbead: Use at outside corners.
2. LC-Bead: Use at exposed panel edges.

D. Exterior Trim: Install in the following locations:

1. Cornerbead: Use at outside corners.
2. LC-Bead: Use at exposed panel edges.

E. Aluminum Trim: Install in locations indicated on Drawings.

3.6 FINISHING GYPSUM BOARD

A. General: Treat gypsum board joints, interior angles, edge trim, control joints, penetrations, fastener heads, surface defects, and elsewhere as required to prepare gypsum board surfaces for decoration. Promptly remove residual joint compound from adjacent surfaces.

B. Prefill open joints, rounded or beveled edges, and damaged surface areas.

C. Apply joint tape over gypsum board joints, except those with trim having flanges not intended for tape.

D. Gypsum Board Finish Levels: Finish panels to levels indicated below and according to ASTM C 840:

1. Level 1: Ceiling plenum areas, concealed areas, and where indicated.
2. Level 2: Panels that are substrate for tile.
3. Level 4: At panel surfaces that will be exposed to view, unless otherwise indicated.

    a. Primer and its application to surfaces are specified in other Division 09 Sections.

E. Glass-Mat Gypsum Sheathing Board: Finish according to manufacturer's written instructions for use as exposed soffit board.

F. Glass-Mat, Water-Resistant Backing Panels: Finish according to manufacturer's written instructions.

G. Cementitious Backer Units: Finish according to manufacturer's written instructions.

3.7 PROTECTION

A. Protect installed products from damage from weather, condensation, direct sunlight, construction, and other causes during remainder of the construction period.

B. Remove and replace panels that are wet, moisture damaged, and mold damaged.

1. Indications that panels are wet or moisture damaged include, but are not limited to, discoloration, sagging, or irregular shape.
2. Indications that panels are mold damaged include, but are not limited to, fuzzy or splotchy surface contamination and discoloration.

END OF SECTION 092900

SECTION 093013 - CERAMIC TILE

PART 1 - GENERAL

1.1 RELATED DOCUMENTS

A. Drawings and general provisions of the Contract, including General and Supplementary Conditions and Division 1 Specification Sections, apply to this Section.

1.2 SUMMARY

A. This Section includes the following:

1. Porcelain wall tile and base.

B. Related Sections include the following:

1. See Division 9 Section “Gypsum Board Assemblies” for the backer panels.

1.3 SUBMITTALS

A. Product Data: For each type of tile, mortar, grout, and other products specified.

B. Tile Samples for Initial Selection: Manufacturer's color charts consisting of actual tiles or sections of tiles showing the full range of colors, textures, and patterns available for each type and composition of tile indicated. Include Samples of accessories involving color selection.

C. Grout Samples for Initial Selection: Manufacturer's color charts consisting of actual sections of grout showing the full range of colors available for each type of grout indicated.

D. Samples for Verification: Of each item listed below, prepared on Samples of size and construction indicated. Where products involve normal color and texture variations, include Sample sets showing the full range of variations expected.

1. Each type and composition of tile and for each color and texture required, at least 12 inches square, mounted on braced cementitious backer units, and with grouted joints using product complying with specified requirements and approved for completed work in color or colors selected by Architect.
2. Full-size units of each type of trim and accessory for each color required.
3. Stone thresholds in 6-inch lengths.
4. Metal edge strips in 6-inch lengths.

E. Product Certificates: Signed by manufacturers certifying that the products furnished comply with requirements.

F. Qualification Data: For firms and persons specified in the "Quality Assurance" Article to demonstrate their capabilities and experience. Include

lists of completed projects with project names and addresses, names of architects and owners, and other information specified.

1.4 QUALITY ASSURANCE

A. Installer Qualifications: Engage an experienced installer who has completed tile installations similar in material, design, and extent to that indicated for this Project and with a record of successful in-service performance.

B. Source Limitations for Tile: Obtain each color, grade, finish, type, composition, and variety of tile from one source with resources to provide products from the same production run for each contiguous area of consistent quality in appearance and physical properties without delaying the Work.

C. Source Limitations for Setting and Grouting Materials: Obtain ingredients of a uniform quality for each mortar, adhesive, and grout component from a single manufacturer and each aggregate from one source or producer.

D. Source Limitations for Other Products: Obtain each of the following products specified in this Section from one source and by a single manufacturer for each product:

1.5 DELIVERY, STORAGE, AND HANDLING

A. Deliver and store packaged materials in original containers with seals unbroken and labels intact until time of use. Comply with requirement of ANSI A137.1 for labeling sealed tile packages.

B. Prevent damage or contamination to materials by water, freezing, foreign matter, and other causes.

C. Handle tile with temporary protective coating on exposed surfaces to prevent coated surfaces from contacting backs or edges of other units. If coating does contact bonding surfaces of tile, remove coating from bonding surfaces before setting tile.

1.6 PROJECT CONDITIONS

A. Environmental Limitations: Do not install tile until construction in spaces is completed and ambient temperature and humidity conditions are being maintained to comply with referenced standards and manufacturer's written instructions.

1.7 EXTRA MATERIALS

A. Deliver extra materials to Owner. Furnish extra materials described below that match products installed, are packaged with protective covering for storage, and are identified with labels describing contents.

1. Tile and Trim Units: Provide three (3) full boxes for each type, compo-

sition, color, pattern, and size of tile installed on the project. Package in original manufacturer's protective wrapping and clearly identify each container, indicating its contents.

1.8 PERFORMANCE REQUIREMENTS

A. Static Coefficient of Friction: For tile installed on walkway surfaces, provide products with the following values as determined by testing identical products per ASTM C 1028:

1. Level Surfaces: Minimum 0.6.
2. Step Treads: Minimum 0.6.
3. Ramp Surfaces: Minimum 0.8.

PART 2 - PRODUCTS

2.1 MANUFACTURERS

A. Manufacturers: Subject to compliance with requirements, provide products by one of the following:

1. Tile Products:
   a. Tilebar
   b. Or approved equal.

2. Setting and Grouting Materials:

   a. LATICRETE International, Inc.
   b. MAPEI Corporation.
   c. Bostik
   d. Bonsal, W.R., Company
   e. DAP, Inc.
   f. TEC Specialty Products, Inc
   g. Or approved equal.

2.2 PRODUCTS, GENERAL

A. ANSI Ceramic Tile Standard: Provide tile that complies with ANSI A137.1, "Specifications for Ceramic Tile," for types, compositions, and other characteristics indicated.

1. Provide tile complying with Standard Grade requirements, unless otherwise indicated.

B. ANSI Standards for Tile Installation Materials: Provide materials complying with ANSI standards referenced in "Setting Materials" and "Grouting Materials" articles.

C. Colors, Textures, and Patterns: Where manufacturer's standard products are indicated for tile, grout, and other products requiring selection of colors, surface textures, patterns, and other appearance characteristics,

provide specific products or materials complying with the following requirements:

1. Provide Architect's selections from manufacturer's full range of colors, textures, and patterns for products of type indicated.
2. Provide tile trim and accessories that match color and finish of adjoining flat tile.

D. Factory Blending: For tile exhibiting color variations within the ranges selected during Sample submittals, blend tile in the factory and package so tile units taken from one package show the same range in colors as those taken from other packages and match approved Samples.

E. Mounting: Where factory-mounted tile is required, provide back- or edge-mounted tile assemblies as standard with manufacturer, unless another mounting method is indicated.

F. Factory-Applied Temporary Protective Coating: Where indicated under tile type, protect exposed surfaces of tile against adherence of mortar and grout by precoating them with a continuous film of petroleum paraffin wax, applied hot. Do not coat unexposed tile surfaces.

2.3 TILE PRODUCTS

A. Porcelain Wall Tile: Provide flat matte tile complying with the following requirements:

1. Module Size: 12 by 24 inches
2. Thickness: 9mm
3. Face: Plain with Rectified edges.

2.4 SETTING MATERIALS

A. Latex-Portland Cement Mortar (Walls): ANSI A118.4, composed as follows:

1. Provide non-sagging, latex-portland cement mortar complying with ANSI A118.4 for mortar of this type defined in Section F-2.1.2
   a. Prepackaged. Laticrete or equal #4XLT multipurpose thin set mortar.

B. Latex Portland Cement Thick Bed Mortar (Floors): ANSI A118.4 Modified, composed as follows:

1. Prepackaged Laticrete or equal #226 thick bed mortar mixed with Laticrete #3701 mortar Admixture.
2. Prepackaged. Laticrete or equal 4XLT multipurpose thin and medium set mortar.

2.5 GROUTING MATERIALS

A. High-Performance Tile Grout: ANSI A118.7. BOD: Laticrete Permacolor or approved equal.

B. Joint Widths: Unless otherwise indicated on tile manufacturers sample boards, install tile with the following joint widths:

1. Ceramic Mosaic Tile: 1/8 inch.
2. Quarry Tile: 3/8 inch.
3. Glazed Wall Tile: 1/16 inch.
4. Porcelain Tile: Varies based on MFG recommendations. (see drawings)

2.6 ELASTOMERIC SEALANTS

A. General: Provide manufacturer's standard chemically curing, elastomeric sealants of base polymer and characteristics indicated that comply with applicable requirements of Division 7 Section "Joint Sealants." Provide sanded caulk to match adjacent grout color at areas of expansion and contraction as indicated on the drawings.

B. Colors: Provide colors of exposed sealants to match colors of grout in tile adjoining sealed joints, unless otherwise indicated.

C. One-Part, Mildew-Resistant Silicone Sealant: ASTM C 920; Type S; Grade NS; Class 25; Uses NT, G, A, and, as applicable to nonporous joint substrates indicated, O; formulated with fungicide, intended for sealing interior ceramic tile joints and other nonporous substrates that are subject to in-service exposures of high humidity and temperature extremes.

D. Products: Subject to compliance with requirements, provide one of the following:

1. One-Part, Mildew-Resistant Silicone Sealants:
   a. Laticrete Premium Acrylic Caulk with 40 matching grout colors available
   b. Dow Corning 786; Dow Corning Corporation.
   c. Sanitary 1700; GE Silicones.
   d. Rhodorsil 6B White; Rhone-Poulenc, Inc.
   e. Tremsil 600 White; Tremco, Inc.
   f. Pecora 898 Sanitary Silicone Sealant; Pecora Corp.
   g. Or approved equal.

2.7 MISCELLANEOUS MATERIALS

A. Metal Edge Strips: White-zinc-alloy terrazzo strips, 1/8 inch wide at top edge with integral provision for anchorage to mortar bed or substrate, unless otherwise indicated.

B. Surface and Movement Joint Profile: Schluter®-DILEX-KSN
   1. Description: profile with integrated trapezoid-perforated anchoring legs, connected by a 7/16" (11 mm) wide replaceable thermoplastic rubber movement zone, which together form the visible surface.
   2. Anchoring Legs Material: EV4A - Stainless Steel Type 316 L = V4A
   3. Movement Zone Color: To be selected by architect from the manufacturers' full range of colors.

C. Wall Tile Corner Trim Profiles: Schluter®-ECK-E
   1. Description: roll-formed stainless-steel profile with 1-15/32" (37 mm) wide exposed surfaces joined by a symmetrically rounded corner, with integrated trapezoid-perforated anchoring legs.

2. Profile Angle: 90-degree angle
3. Material and Finish: EV4A - Stainless Steel Type 316 L = V4A.

D. Edging Profiles: Schluter®-Schiene
1. Description: L-shaped profile with 1/8" (3.2) wide top section and vertical wall section that together form the visible surface, integrated trapezoid perforated anchoring leg, and integrated grout joint spacer.
2. Anchoring Leg: Provide with straight anchoring leg
   a. Provide with special radius anchoring leg for radius applications
3. Material and Finish: EV4A - Stainless Steel Type 316 L = V4A

E. Temporary Protective Coating: Provide product indicated below that is formulated to protect exposed surfaces of tile against adherence of mortar and grout; is compatible with tile, mortar, and grout products; and is easily removable after grouting is completed without damaging grout or tile.

1. Petroleum paraffin wax, fully refined and odorless, containing at least 0.5 percent oil with a melting point of 120 to 140 deg F (49 to 60 deg C) per ASTM D 87.
2. Grout release in form of manufacturer's standard proprietary liquid coating that is specially formulated and recommended for use as a temporary protective coating for tile.

F. Tile Cleaner: A pH neutral cleaner capable of removing soil and residue without harming tile and grout surfaces, specifically approved for materials and installations indicated by tile and grout manufacturers.

2.8 MIXING MORTARS AND GROUT

A. Mix mortars and grouts to comply with referenced standards and mortar and grout manufacturers' written instructions.

B. Add materials, water, and additives in accurate proportions.

C. Obtain and use type of mixing equipment, mixer speeds, mixing containers, mixing time, and other procedures to produce mortars and grouts of uniform quality with optimum performance characteristics for installations indicated.

2.9 WATERPROOF MEMBRANE

A. Fluid-Applied Membrane: Liquid-latex rubber or elastomeric polymer. Meets ANSI A118.10. Basis of Design: Laticrete Hydroban or Approved Equal.

2.10 CRACK ISOLATION MEMBRANE

A. Fluid-Applied Membrane: Liquid-latex rubber or elastomeric polymer. BOD: Laticrete Hydroban

PART 3 - EXECUTION

3.1 EXAMINATION

A. Examine substrates, areas, and conditions where tile will be installed, with Installer present, for compliance with requirements for installation tolerances and other conditions affecting performance of installed tile.

1. Verify that substrates for setting tile are firm; dry; clean; free from oil, waxy films, and curing compounds; and within flatness tolerances required by referenced ANSI A108 series of tile installation standards for installations indicated.
2. Verify that installation of grounds, anchors, recessed frames, electrical and mechanical units of work, and similar items located in or behind tile has been completed before installing tile.
3. Verify that joints and cracks in tile substrates are coordinated with tile joint locations; if not coordinated, adjust latter in consultation with Architect.

B. Do not proceed with installation until unsatisfactory conditions have been corrected.

3.2 PREPARATION

A. Remove coatings, including curing compounds, and other substances that contain soap, wax, oil, or silicone and are incompatible with tile-setting materials by using a terrazzo or concrete grinder, a drum sander, or a polishing machine equipped with a heavy-duty wire brush.

B. Provide concrete substrates for tile floors installed with dry-set or latex-portland cement mortars that comply with flatness tolerances specified in referenced ANSI A108 series of tile installation standards for installations indicated.

1. Use trowelable leveling and patching compounds per tile-setting material manufacturer's written instructions to fill cracks, holes, and depressions.
2. Remove protrusions, bumps, and ridges by sanding or grinding.

C. Blending: For tile exhibiting color variations within the ranges selected during Sample submittals, verify that tile has been blended in the factory and packaged so tile units taken from one package show the same range in colors as those taken from other packages and match approved Samples. If not factory blended, either return to manufacturer or blend tiles at Project site before installing.

D. Field-Applied Temporary Protective Coating: Where indicated under tile type or needed to prevent adhesion or staining of exposed tile surfaces by grout, protect exposed surfaces of tile against adherence of mortar and grout by precoating them with a continuous film of temporary protective coating indicated below, taking care not to coat unexposed tile surfaces:

1. Petroleum paraffin wax or grout release.

3.3 INSTALLATION, GENERAL

A. ANSI Tile Installation Standards: Comply with parts of ANSI A108 series of tile installation standards in "Specifications for Installation of Ceramic Tile" that apply to types of setting and grouting materials and to methods indicated in ceramic tile installation schedules. This section includes coverage requirements.

B. TCA Installation Guidelines: TCA's "Handbook for Ceramic Tile Installation." Comply with TCA installation methods indicated in ceramic tile installation schedules.

C. Extend tile work into recesses and under or behind equipment and fixtures to form a complete covering without interruptions, unless otherwise indicated. Terminate work neatly at obstructions, edges, and corners without disrupting pattern or joint alignments.

D. Accurately form intersections and returns. Perform cutting and drilling of tile without marring visible surfaces. Carefully grind cut edges of tile abutting trim, finish, or built-in items for straight aligned joints. Fit tile closely to electrical outlets, piping, fixtures, and other penetrations so plates, collars, or covers overlap tile.

E. Jointing Pattern: Lay tile in grid pattern, unless otherwise indicated. Align joints when adjoining tiles on floor, base, walls, and trim are the same size. Lay out tile work and center tile fields in both directions in each space or on each wall area. Adjust to minimize tile cutting. Provide uniform joint widths, unless otherwise indicated.

1. For tile mounted in sheets, make joints between tile sheets the same width as joints within tile sheets so joints between sheets are not apparent in finished work.

F. Grout tile to comply with the requirements of the following tile installation standards:

1. For ceramic tile grouts (sand-portland cement, dry-set, commercial portland cement, and latex-portland cement grouts), comply with ANSI A108.10.

3.4 WALL TILE INSTALLATION

A. Install types of tile designated for wall installations to comply with requirements in the Ceramic Tile Wall Installation Schedule, including those referencing TCA installation methods and ANSI setting-bed standards.

B. Install and scratch coat to walls to comply with ANSI A108.1A, Section 4.1.

C. Joint Widths: Install tile on walls with the following joint widths:

1. Porcelain Tile: 3/16 inch with rectangular tiles with a 1/3 running

bond pattern (overlap shall not exceed 33%) .

D. Back Buttering: For installations indicated, obtain 100 percent mortar coverage by complying with applicable special requirements for back buttering of tile in referenced ANSI A108 series of tile installation stanards.

3.5 CLEANING AND PROTECTING

A. Cleaning: On completion of placement and grouting, clean all ceramic tile surfaces so they are free of foreign matter.

1. Remove latex-portland cement grout residue from tile as soon as possible.
2. Unglazed tile may be cleaned with acid solutions only when permitted by tile and grout manufacturer's written instructions, but no sooner than 10 days after installation. Protect metal surfaces, cast iron, and vitreous plumbing fixtures from effects of acid cleaning. Flush surface with clean water before and after cleaning.
3. Remove temporary protective coating by method recommended by coating manufacturer that is acceptable to brick and grout manufacturer. Trap and remove coating to prevent it from clogging drains.

B. Finished Tile Work: Leave finished installation clean and free of cracked, chipped, broken, unbonded, and otherwise defective tile work.

C. Provide final protection and maintain conditions, in a manner acceptable to manufacturer and Installer, that ensure tile is without damage or deterioration at the time of Substantial Completion.

1. When recommended by tile manufacturer, apply a protective coat of neutral protective cleaner to completed tile walls and floors. Protect installed tile work with kraft paper or other heavy covering during construction period to prevent staining, damage, and wear.
2. Prohibit foot and wheel traffic from tiled floors for at least 7 days after grouting is completed.

D. Before final inspection, remove protective coverings and rinse neutral cleaner from tile surfaces.

END OF SECTION 093013

Section 095423 – EXTERIOR LINEAR METAL CEILING SYSTEM

PART 1 GENERAL

1.1 RELATED DOCUMENTS

A. Drawings and general provisions of the Contract, including General and Supplementary Conditions and Division 1 Specification Sections, apply to this Section.

1.2 SUMMARY

A. Section Includes:

1. Perforated and non-perforated metal ceiling panels

2. Suspension systems

3. Accessories; provide other necessary items including devices for attachment overhead construction, secondary members, splines, splices, connecting clips, wall connectors, wall angles, and other devices required for a complete installation.

4. Supplemental support framing: Provide fully engineered secondary framing as required to meet code, conforming to layout shown in drawings, to support direct-hung metal ceilings suspension system.

B. Related Sections / Work:

1. Sections 092900 – Gypsum Board

2. Sections 099000 – Interior Painting

3. Division 23 – Heating, Ventilating and Air Conditioning

4. Division 26 – Electrical

C. This Section covers the general requirements only for Acoustical Metal Ceilings as shown on the drawings. The supplying and installation of additional accessory features and other items not specifically mentioned herein, but which are necessary to make a complete installation, shall also be included or clarified accordingly.

D. Qualification Data**:**

1. Test Reports: Certified reports from independent agency substantiating structural compliance to wind loads and other governing requirements.

2. Certificates:

a. Data substantiating manufacturer and installer qualifications.

b. Certified data attesting fire rated materials comply with specifications.

3. Manufacturer's Instructions: Detailed installation instructions and maintenance data.

1.3 REFERENCES

A. American Society for Testing and Materials (ASTM)

1. E 84 – "Standard Test Method for Surface Burning Characteristics of Building Materials"

2. E 488 – "Standard Test Methods for Strength of Anchors in Concrete and Masonry Elements"

3. B 209 – "Standard Specification for Aluminum and Aluminum Alloy Sheet and Plate"

4. C 423 – "Sound Absorption and Sound Absorption Coefficients by Reverberation Room Method"

5. E 580 – "Standard Practice for Application of Ceiling Suspension Systems for Acoustical Tile and Lay-in Panels in Areas Requiring Moderate Seismic Restraint"

6. C 635 – "Standard Specification for Metal Suspension Systems for Acoustical Tile and Lay-in Panel Ceilings"

7. C 636 – "Recommended Practice for Installation of Metal Ceiling Suspensions Systems for Acoustical and Lay-in Panels"

8. A 641 – "Standard Specification for Zinc-Coated (Galvanized) Carbon Steel Wire"

9. A 653 – "Standard Specification for Steel Sheet, Zinc-Coated (Galvanized) or Zinc-Iron Alloy Coated (Galvannealed) by the Hot-Dip process"

10. E 1264 – "Classification for Acoustical Ceiling Products"

11. E 1477 – "Standard Test Method for Luminous Reflectance Factor of Acoustical Materials by use of Integrating-Sphere Reflectometers"

12. D 1044 – "Practice for Abrasion Resistance"

13. D 1002 – "Practice for Adhesion Resistance"

1.4 SUBMITTALS

A. Product Data: Manufacturer's published literature, including specifications.

B. Product Certification: Manufacturer's certifications that products comply with specified requirements and governing codes including product data, laboratory test reports and research reports showing compliance with specified standards.

C. Shop Drawings: Submit shop drawings for reflected ceiling plans (RCP's), drawn to scale, and indicating penetrations and ceiling mounted items. Show the following details:

1. Reflected Ceiling Plan(s): Indicating metal ceiling layout, ceiling mounted items and penetrations.

2. Suspension System, Carrier and Component Layout.

3. Details of system assembly and connections to building components.

D. Samples for Verification: Full-size units (or as specified below) of each type of ceiling assembly indicated; in sets for each color, texture, and pattern specified, showing the full range of variations expected in these characteristics. Submit samples for each type specified.

1. 11" square metal panel units.

2. 11" long samples of each exposed molding or trim.

3. 11" long samples of each suspension component.

1.5 QUALITY ASSURANCE

A. Manufacturer/Installer Qualifications:

1. Provide metal ceiling system components produced by a single manufacturer with a minimum 10 years' experience in actual production of specified products and with resources to provide consistent quality in appearance and physical properties, including production in an environmentally controlled indoor factory facility and having previously certified Miami-Dade County NOA certifications.

2. Provide suspension system components produced by a single manufacturer to provide compatible components for a complete metal ceiling system installation.

3. Perform installations using a firm with installers having no less than 3 years of successful experience on projects of similar size and requirements.

B. Regulatory Requirements:

1. Fire Rating Performance Characteristics: Install system to provide a flame spread of 0 - 25, complying with certified testing to ASTM E 84.

2. Structural Criteria: Install and certify system to comply with structural and wind load requirements of governing codes.

3. Installation Standard for Suspension System: Comply with ASTM C 636.

4. Wind Load: Per code. Designed and tested in accordance with the requirements of the Florida Building Code 6th edition (2017), including the High Velocity Hurricane Zone (HVHZ) provisions and Miami-Dade requirements. Miami-Dade County, Florida Notice of Acceptance No. 20-0203.01 (expires 3/19/25).

C. Mock-Up: Prior to beginning installation erect a mock-up section, where directed, using all system components.

D. Pre-installation Conference: Conduct a conference, prior to start of installation, to review system requirements, shop drawings, and all coordination needs.

1.6 DELIVERY, STORAGE AND HANDLING

A. Deliver system components in manufacturer's original unopened packages, clearly labeled.

B. Store components in fully enclosed dry space. Carefully place on skids, to prevent damage from moisture and other construction activities.

C. Handle components to prevent damage to surfaces and edges, and to prevent distortion and other physical damage.

1.7 PROJECT CONDITIONS

A. Begin system installations only after spaces are enclosed and weather-tight, and after all wet work and overhead work have been completed.

B. Prior to starting installations, allow materials to reach ambient room temperature and humidity intended to be maintained for occupancy.

1.8 WARRANTY

A. Provide specified manufacturer's warranty against defects in workmanship, discoloration, or other defect considered undesirable by the Architect or Employer.

B. This warranty shall remain in effect for a minimum period of one (1) year from date of initial acceptance.

1.9 MAINTENANCE & EXTRA MATERIALS

A. Maintenance Instructions: Provide manufacturer's standard maintenance and cleaning instructions for finishes provided.

B. Extra Materials: Furnish extra materials described below that match products installed, are packaged with protective covering for storage, and are identified with labels describing contents. Only typical system components are included with attic stock.

1. Acoustical Metal Ceiling Pan Units: Full-size units equal to two percent (2%) of amount installed.

2. Ceiling Suspension System Components: Quantity of each grid and exposed component equal to two percent (2%) of amount installed.

PART 2 PRODUCTS

2.1 MANUFACTURER

A. Basis of Design: 150F metal plank ceiling system manufactured by CertainTeed Architectural, 5015 Oakbrook Parkway, Suite 100, Norcross, GA 30093. Tel: (800) 366-4327; www.CertainTeed.com/Architectural

B. Approval of Comparable Products: Submit the following in accordance with project substitution requirements, within time allowed for substitution review:

1. Product data, including certified independent test data indicating compliance with requirements.
2. Samples of each component.
3. Sample submittal from similar project.
4. Project references: Minimum of five installations not less than five years old, with Owner and Architect contact information.

5. Sample warranty.

2.2 SYSTEM MATERIALS

A. Linear metal plank soffit system for exterior installations:

1. Miami-Dade County, Florida Notice of Acceptance No. 20-0203.01 (expires 3/19/25).

B. Panel Profile Type: 150F, roll formed .025" thick aluminum; 5-29/32" (150 mm) wide, ¾" deep, with square interlocking, integral reveal closure edges.

1. Length: ***Standard 12' (minimum 3' – maximum 20')***

C. Suspension System (Concealed):

1. Carrier: V-shaped roll-formed aluminum section with hook-shaped tabs spaced to receive panels. Finish is factory applied black enamel.

2. Hanger Wire: 12 Ga. galvanized carbon steel.

3. Seismic/Wind Uplift Compression Struts: Verify and insert proper sizes required to comply with governing codes, as designed by registered structural engineer.

D. Perforations for ventilation only

1. Pattern: ***Non-perforated***

E. Panel Finish: Paint; color to be selected by architect

1. Luxacote Exterior Paint

2. Powder Coat

3. Decorated Wood-Look Powder Coat

2.3 ACCESSORY MATERIALS

A. Panel Splice: Formed aluminum finished in ***matching***.

B. Edge trim: Manufacturer's standard edge trim moldings.

C. Air Distribution Devices: Provide distribution devices that are independently suspended, relocatable, adjustable from below finished ceiling, and capable of being concealed behind (invisible to view) and fully integrated with ceiling system so as to allow no interruption of ceiling components.

D. Lighting Fixtures: Provide fixtures capable of being fully integrated with ceiling system and requiring no interruption of ceiling components, that are independently suspended, and as selected to conform to lighting criteria specified in Division 16.

PART 3- EXECUTION

3.1 EXAMINATION

A. Examine substrates and structural framing to which acoustical metal panels attach or abut, with installer present, for compliance with requirements specified in this and other Sections that affect installation and anchorage, and other conditions affecting performance of metal panel ceilings.

B. Proceed with installation only after unsatisfactory conditions have been corrected.

3.2 PREPARATION

A. Coordination: Furnish layouts for cast-in-place anchors, clips, and other ceiling anchors whose installation is specified in other Sections.

B. Measure each ceiling area and establish layout of acoustical metal pan units to balance border widths at opposite edges of each ceiling. Avoid using less-than-half-width units at borders, and comply with layout shown on reflected ceiling plans.

C. Survey substrate for wall attachment to assure squareness and proper elevation for wall panel installation.

3.3 INSTALLATION

A. General: Install acoustical metal pan ceilings, per manufacturers shop drawings provided, per manufacturer's written instructions and to comply with publications referenced below.

1. CISCA "Ceiling Systems Handbook"

2. Standard for Ceiling Suspension System Installations - ASTM C 636

3. Standard for Ceiling Suspension Systems Requiring Seismic Restraint - ASTM E 580

4. IBC (International Building Code) Standard for Seismic Zone for local area

B. Suspend ceiling hangers from building's approved structural substrates and as follows:

1. Install hangers plumb and free from contact with insulation or other objects within ceiling plenum that are not part of supporting structure or of ceiling suspension system.

2. Splay hangers only where required to miss obstructions; offset resulting horizontal forces by bracing, counter-splaying, or other equally effective means.

3. Where width of ducts and other construction within ceiling plenum produce hanger spacings that interfere with location of hangers at spacing required to support standard suspension system members, install supplemental suspension members and hangers in form of trapezes or equivalent devices. Utilize supplemental suspension members and hangers to support ceiling loads within performance limits established by referenced standards and publications.

4. Where used secure wire hangers to ceiling suspension members and to supports above with a minimum of three tight turns. Connect hangers directly either to structures or to inserts, eye screws, or other devices that are secure; that are appropriate for substrate; and that will not deteriorate or otherwise fail due to age, corrosion, or elevated temperatures.

5. Space hangers not more than 48" on-center, along each member supported directly from hangers, unless otherwise indicated; and provide hangers not more than 12" from ends of each member. Supply supporting calculations from licensed Structural Engineer verifying hanger spacing meets all requirements, when spacing exceeds those recommended.

6. Level grid to 1/8" in 10' from specified elevation(s), square and true.

7. Adjust suspension system runners so they are square (within .5 degree from 90 degrees) and securely interlocked with one another. Remove and replace dented, bent, or kinked members.

C. Secure bracing wires to ceiling suspension members and to supports acceptable to Architect/Engineer and/or inspector. Suspend bracing from building's structural members and/or structural deck, as required for hangers, without attaching to permanent metal forms, steel deck, or steel deck tabs (unless directed otherwise).

D. Install edge moldings and trim of type indicated at perimeter of acoustical ceiling area and where necessary to conceal edges of acoustical metal pan. Method of edge trim attachment and design of edge trims to be approved by Architect.

1. Screw attach moldings to substrate at intervals not more than 18" on-center and not more than 6" from ends, leveling with ceding suspension system to a tolerance of 1/8" in 10'. Miter corners accurately and connect securely.

2. Do not use exposed fasteners, including pop rivets, on moldings and trim without prior written approval, or unless detailed otherwise.

E. Scribe and cut acoustical metal panel units for accurate fit at penetrations by other work through ceilings. Stiffen edges of cut units as required to eliminate evidence of buckling or variations in flatness exceeding referenced standards for stretcher-leveled metal sheet.

F. Install acoustical metal panel units in coordination with suspension system. Fit adjoining units to form flush, tight joints. Scribe and cut units for accurate fit at borders and around construction penetrating ceiling.

3.4 ADJUST AND CLEAN

A. Adjust components to provide uniform tolerances.

B. Replace all ceiling panels that are scratched, dented or otherwise damaged.

C. Clean exposed surfaces with non-solvent, non-abrasive commercial type cleaner.

END OF SECTION 095423

SECTION 096513 - RESILIENT BASE AND ACCESSORIES

PART 1 - GENERAL

1.1 RELATED DOCUMENTS

A. Drawings and general provisions of the Contract, including General and Supplementary Conditions and Division 01 Specification Sections, apply to this Section.

1.2 SUMMARY

A. Section Includes:

1. Resilient base.
2. Resilient molding accessories.

B. Related Sections:
1. Division 09 Section "Resilient Tile Flooring".

1.3 SUBMITTALS

A. Product Data: For each type of product indicated.

B. Samples for Initial Selection: For each type of product indicated.

C. Samples for Verification: For each type of product indicated, in manufacturer's standard-size Samples but not less than 12 inches (300 mm) long, of each resilient product color, texture, and pattern required.

D. Product Schedule: For resilient products. Use same designations indicated on Drawings.

1.4 QUALITY ASSURANCE

A. Fire-Test-Response Characteristics: As determined by testing identical products according to ASTM E 648 or NFPA 253 by a qualified testing agency.

1. Critical Radiant Flux Classification: Class I, not less than 0.45 W/sq. cm.

1.5 DELIVERY, STORAGE, AND HANDLING

A. Store resilient products and installation materials in dry spaces protected from the weather, with ambient temperatures maintained within range recommended by manufacturer, but not less than 50 deg F (10 deg C) or more than 90 deg F (32 deg C).

1.6 PROJECT CONDITIONS

A. Maintain ambient temperatures within range recommended by manufacturer, but not less than 70 deg F (21 deg C) or more than 95 deg F (35 deg C), in spaces to receive resilient products during the following time periods:

1. 48 hours before installation.
2. During installation.
3. 48 hours after installation.

B. Until Substantial Completion, maintain ambient temperatures within range recommended by manufacturer, but not less than 55 deg F (13 deg C) or more than 95 deg F (35 deg C).

C. Install resilient products after other finishing operations, including painting, have been completed.

1.7 EXTRA MATERIALS

A. Furnish extra materials that match products installed and that are packaged with protective covering for storage and identified with labels describing contents.

1. Furnish not less than 10 linear feet (3 linear m) for every 500 linear feet (150 linear m) or fraction thereof, of each type, color, pattern, and size of resilient product installed.

PART 2 - PRODUCTS

2.1 RESILIENT BASE

A. Resilient Base:

1. Manufacturers: Subject to compliance with requirements, provide products by one of the following:
   a. Johnsonite.
   b. Roppe Corporation, USA.
   c. Armstrong World Industries, Inc.
   d. Burke Mercer Flooring Products; Division of Burke Industries, Inc.

B. Resilient Base Standard: ASTM F 1861.

1. Material Requirement: Type TP (rubber, thermoplastic)
2. Manufacturing Method: Group I (solid, homogeneous)
3. Style: Cove (base with toe). Refer to finish schedule for locations.

C. Minimum Thickness: 0.125 inch (3.2 mm) for Cove.

D. Height: 4 inches (102 mm). Refer to finish schedule for locations.

E. Lengths: Coils in manufacturer's standard length.

F. Outside Corners: Preformed.

G. Inside Corners: Preformed.

H. Finish: As selected by Architect from manufacturer's full range.

I. Colors and Patterns: See Architectural Drawings for, type, size, color and specifics.

2.2 RESILIENT MOLDING ACCESSORY

A. Resilient Molding Accessory:

1. Manufacturers: Subject to compliance with requirements, provide products by one of the following:
   a. Johnsonite.
   b. Roppe Corporation, USA.
   c. Johnsonite.
   d. Flexco, Inc.

B. Description: Carpet edge for glue-down applications, Reducer strip for resilient floor covering, Joiner for tile and carpet, Transition strips.

C. Material: Metal.

D. Profile and Dimensions: As indicated.

E. Colors and Patterns: As selected by Architect from full range of industry colors.

2.3 INSTALLATION MATERIALS

A. Trowelable Leveling and Patching Compounds: Latex-modified, portland cement based or blended hydraulic-cement-based formulation provided or approved by manufacturer for applications indicated.

B. Adhesives: Water-resistant type recommended by manufacturer to suit resilient products and substrate conditions indicated.

1. Use adhesives that comply with the following limits for VOC content when calculated according to 40 CFR 59, Subpart D (EPA Method 24):

   a. Cove Base Adhesives: Not more than 50 g/L.
   b. Rubber Floor Adhesives: Not more than 60 g/L.

C. Metal Edge Strips: Extruded aluminum with mill finish of width shown, of height required to protect exposed edges of tiles, and in maximum available lengths to minimize running joints.

D. Floor Polish: Provide protective liquid floor polish products as recommended by resilient stair tread manufacturer.

PART 3 - EXECUTION

3.1 EXAMINATION

A. Examine substrates, with Installer present, for compliance with requirements for maximum moisture content and other conditions affecting performance of the Work.

B. Verify that finishes of substrates comply with tolerances and other requirements specified in other Sections and that substrates are free of cracks, ridges, depressions, scale, and foreign deposits that might interfere with adhesion of resilient products.

C. Proceed with installation only after unsatisfactory conditions have been corrected.

3.2 PREPARATION

A. Prepare substrates according to manufacturer's written instructions to ensure adhesion of resilient products.

1. Verify that substrates are dry and free of curing compounds, sealers, and hardeners.
2. Remove substrate coatings and other substances that are incompatible with adhesives and that contain soap, wax, oil, or silicone, using mechanical methods recommended by manufacturer. Do not use solvents.
3. Alkalinity and Adhesion Testing: Perform tests recommended by manufacturer.
4. Moisture Testing: Perform tests recommended by manufacturer and as follows. Proceed with installation only after substrates pass testing.

B. Fill cracks, holes, and depressions in substrates with trowelable leveling and patching compound and remove bumps and ridges to produce a uniform and smooth substrate.

C. Do not install resilient products until they are same temperature as the space where they are to be installed.

1. Move resilient products and installation materials into spaces where they will be installed at least 48 hours in advance of installation.

D. Sweep and vacuum clean substrates to be covered by resilient products immediately before installation.

3.3 RESILIENT BASE INSTALLATION

A. Comply with manufacturer's written instructions for installing resilient base.

B. Apply resilient base to walls, columns, pilasters, casework and cabinets in toe spaces, and other permanent fixtures in rooms and areas where base is required.

C. Install resilient base in lengths as long as practicable without gaps at seams and with tops of adjacent pieces aligned.

D. Tightly adhere resilient base to substrate throughout length of each piece, with base in continuous contact with horizontal and vertical substrates.

E. Do not stretch resilient base during installation.

F. On masonry surfaces or other similar irregular substrates, fill voids along top edge of resilient base with manufacturer's recommended adhesive filler material.

G. Preformed Outside Corners: Install preformed corners before installing straight pieces.

H. Preformed Inside Corners: Install preformed corners before installing straight pieces.

3.4 RESILIENT ACCESSORY INSTALLATION

A. Comply with manufacturer's written instructions for installing resilient accessories.

B. Resilient Stair Accessories:

1. Use stair-tread-nose filler to fill nosing substrates that do not conform to tread contours.
2. Tightly adhere to substrates throughout length of each piece.
3. For treads installed as separate, equal-length units, install to produce a flush joint between units.

C. Resilient Molding Accessories: Butt to adjacent materials and tightly adhere to substrates throughout length of each piece. Install reducer strips at edges of carpet and resilient floor covering that would otherwise be exposed.

3.5 CLEANING AND PROTECTION

A. Comply with manufacturer's written instructions for cleaning and protection of resilient products.

B. Perform the following operations immediately after completing resilient product installation:

1. Remove adhesive and other blemishes from exposed surfaces.
2. Sweep and vacuum surfaces thoroughly.
3. Damp-mop surfaces to remove marks and soil.

C. Protect resilient products from mars, marks, indentations, and other damage from construction operations and placement of equipment and fixtures during remainder of construction period.

D. Floor Polish: Remove soil, visible adhesive, and surface blemishes from resilient stair treads before applying liquid floor polish.

1. Apply required number of coats per manufacturer’s recommendation.

E. Cover resilient products until Substantial Completion.

END OF SECTION 096513

SECTION 097700 – FIBERGLASS REINFORCED WALL PANELS

PART 1 - GENERAL

1.1 SUMMARY

A. Section Includes: Prefinished polyester glass reinforced plastic sheets and adhered to unfinished gypsum, cementitous wallboard.
   1. PVC trim.

B. Products Not Furnished or Installed under This Section:
   1. Gypsum [Cementitious] substrate board.
   2. Resilient Base.

1.2 RELATED SECTIONS

A. Section 092900 – Gypsum [Cementitious] substrate board.

B. Section 061063 - Wood Stud Framing

C. Section 096513 - Resilient Base.

1.3 REFERENCES

A. American Society for Testing and Materials: Standard Specifications (ASTM)
   1. ASTM D 256 - Izod Impact Strengths (ft #/in)
   2. ASTM D 570 - Water Absorption (%)
   3. ASTM D 638 - Tensile Strengths (psi) & Tensile Modulus (psi)
   4. ASTM D 790 - Flexural Strengths (psi) & Flexural Modulus (psi)
   5. ASTM D 2583- Barcol Hardness
   6. ASTM D 5319 - Standard Specification for Glass-Fiber Reinforced Polyester Wall and Ceiling Panels.
   7. ASTM E 84 - Standard Test Method for Surface Burning Characteristics of Building Materials.

1.4 SUBMITTALS

A. Product Data: Submit sufficient manufacturer's data to indicate compliance with these specifications, including:
   1. Preparation instructions and recommendations.
   2. Storage and handling requirements and recommendations.
   3. Installation methods.

B. Shop Drawings: Submit elevations of each wall showing location of paneling and trim members with respect to all discontinuities in the wall elevation.

C. Selection Samples: Submit manufacturer's standard color pattern selection samples representing manufacturer's full range of available colors and patterns.

D. Samples for Verification: Submit appropriate section of panel for each finish selected indicating the color, texture, and pattern required.
   1. Submit complete with specified applied finish.
   2. For selected patterns show complete pattern repeat.
   3. Exposed Molding and Trim: Provide samples of each type, finish, and color.

E. Manufacturers Material Safety Data Sheets (MSDS) for adhesives, sealants and other pertinent materials prior to their delivery to the site (available as downloads for most Marlite's products at http://www.marlite.com/tech-details.aspx or by contacting Marlite at info@marlite.com).

1.5 QUALITY ASSURANCE

A. Conform to building code requirements for interior finish for smoke and flame spread requirements as tested in accordance with:
   1. ASTM E 84 (Method of test for surface burning characteristics of building Materials)
      a. Wall Required Rating – Class A.

B. Sanitary Standards: System components and finishes to comply with:
   1. United States Department of Agriculture (USDA) / Food Safety & Inspection Services (FSIS) requirements for food preparation facilities, incidental contact.
   2. Food and Drug Administration (FDA) 2013 Food Code 6-101.11.
   3. Canadian Food Inspection Agency (CFIA) requirements.

1.6 DELIVERY, STORAGE AND HANDLING

A. Deliver materials factory packaged on strong pallets.

B. Store panels and trim lying flat, under cover and protected from the elements. Allow panels to acclimate to room temperature (range of 60 to 75°F) for 48 hours prior to installation.

1.7 PROJECT CONDITIONS

A. Environmental Limitations: Building are to be fully enclosed prior to installation with sufficient heat (70°) and ventilation consistent with good working conditions for finish work

B. During installation and for not less than 48 hours before, maintain an ambient temperature and relative humidity within limits required by type of adhesive used and recommendation of adhesive manufacturer.
   1. Provide ventilation to disperse fumes during application of adhesive as recommended by the adhesive manufacturer.

1.8 WARRANTY

A. Furnish one-year guarantee against defects in material and workmanship.

PART 2 - PRODUCTS

2.1 ACCEPTABLE MANUFACTURER

2.2 Basis of Design Manufacturer: Marlite; 1 Marlite Drive, Dover, OH 44622. 800-377-1221 FAX (330) 343-4668 Email: info@marlite.com www.marlite.com.

A. Product Substitutions: Subject to compliance with requirements, provide products that are Architect approved equals.

B. Product:
   1. Standard FRP
   2. Laminated FRP

2.3 PANELS

A. Fiberglass reinforced thermosetting polyester resin panel sheets complying with ASTM D 5319.
   1. Dimensions:
      a. Thickness – 0.090 " (2.29mm) nominal
      b. Width - 4'-0" (1.22m) nominal
      c. Length – As indicated on the drawings
   2. Tolerance:
      a. Length and Width: +/-1/8 " (3.175mm)
      b. Square - Not to exceed 1/8 " for 8 foot (2.4m) panels or 5/32 " (3.96mm) for 10 foot (2.4m) panels

B. Properties: Resistant to rot, corrosion, staining, denting, peeling, and splintering.
   1. Flexural Strength - 1.7 x 10^4 psi per ASTM D 790.
   2. Flexural Modulus – 6.0 x 10^5 psi per ASTM D 790.
   3. Tensile Strength – 8.0 x 10^3 psi per ASTM D 638.
   4. Tensile Modulus – 9.43 x 10^5 psi per ASTM D 638.
   5. Water Absorption - 0.17% per ASTM D 570.
   6. Barcol Hardness (scratch resistance) of 30 as per ASTM D 2583.
   7. Izod Impact Strength of 7.0 ft. lbs./in ASTM D 256

C. Back Surface: Smooth. Imperfections which do not affect functional properties are not cause for rejection.

D. Front Finish: As selected by the Architect from the manufacturer's full range.
   1) Color: As selected by the Architect from the manufacturer's full range of colors.
      a. Surface [Specifier to choose.] Marlite Standard FRP and Symmetrics are available on two standard surface textures. Pebbled or Smooth As selected by the Architect.

b. Fire Rating Class A (I).

c. Size: as indicated on drawings

2.4 MOLDINGS

A. PVC Trim: Thin-wall semi-rigid extruded PVC.
1. M 350 Inside Corner
2. M 360 Outside Corner
3. M 365 Division,
4. M 370 Edge,
5. V 177 135° Inside Corner
6. V 179 135° Outside Corner
7. Color: As selected by the Architect from the manufacturer's full range of colors.]

B. Outside Corner Guard:
1. M 961 PVC Outside Corner Guard
a. Color: As selected by the Architect from the manufacturer's full range of colors.

2.5 ACCESSORIES

A. Fasteners: Non-staining nylon drive rivets.
1. Match panel colors.
2. Length to suit project conditions.

B. Adhesive: Either of the following construction adhesives complying with ASTM C 557.
1. Marlite C-551 FRP Adhesive - Water- resistant, non-flammable adhesive.
2. Marlite C-915 Construction Adhesive - Flexible, water-resistant, solvent based adhesive, formulated for fast, easy application.
3. Titebond Advanced Polymer Panel Adhesive – VOC compliant, non-flammable, environmentally safe adhesive.

C. Sealant:
1. Marlite Brand MS-250 Clear Silicone Sealant.
2. Marlite Brand MS-251 White Silicone Sealant.
3. Marlite Brand - Color Match Sealant.

PART 3 - EXECUTION

3.1 PREPARATION

A. Examine backup surfaces to determine that corners are plumb and straight, surfaces are smooth, uniform, clean and free from foreign matter, nails countersunk, joints and cracks filled flush and smooth with the adjoining surface.
1. Verify that stud spacing does not exceed 24" (61cm) on-center.

B. Repair defects prior to installation.

1. Level wall surfaces to panel manufacturer's requirements. Remove protrusions and fill indentations.

3.2 INSTALLATION

A. Comply with manufacturer's recommended procedures and installation sequence.

B. Cut sheets to meet supports allowing 1/8" (3 mm) clearance for every 8 foot (2.4m) of panel.
   1. Cut and drill with carbide tipped saw blades or drill bits, or cut with shears.
   2. Pre-drill fastener holes 1/8" (3mm) oversize with high speed drill bit.
      a. Space at 8" (200mm) maximum on center at perimeter, approximately 1" from panel edge.
      b. Space at in field in rows 16' (40.64cm) on center, with fasteners spaced at 12" (30.48 cm) maximum on center.

C. Apply panels to board substrate, above base, vertically oriented with seams plumb and pattern aligned with adjoining panels.
   1. Install panels with manufacturer's recommended gap for panel field and corner joints.
      a. Adhesive trowel and application method to conform to adhesive manufacturer's recommendations.
      b. Drive fasteners for snug fit. Do not over-tighten.

D. Apply panel moldings to all panel edges using silicone sealant providing for required clearances.
   1. All moldings must provide for a minimum 1/8 "(3mm) of panel expansion at joints and edges, to insure proper installation.
   2. Apply sealant to all moldings, channels and joints between the system and different materials to assure watertight installation.

3.3 CLEANING

A. Remove excess sealant from panels and moldings. Wipe panel down using a damp cloth and mild soap solution or cleaner.

B. Refer to manufacturer's specific cleaning recommendations Do not use abrasive cleaners.

END OF SECTION - 097700

SECTION 099600 - HIGH-PERFORMANCE COATINGS

PART 1 - GENERAL

1.1 RELATED DOCUMENTS

A. Drawings and general provisions of the Contract, including General and Supplementary Conditions and Division 01 Specification Sections, apply to this Section.

1.2 SUMMARY

A. Section includes surface preparation and the application of high-performance coating systems on the following substrates:

1. Exterior Substrates:

a. Steel.
b. Galvanized metal.
c. Aluminum (not anodized or otherwise coated).

2. Interior Substrates:

a. Steel.
b. Galvanized metal.
c. Aluminum (not anodized or otherwise coated).
d. Gypsum board.

B. Related Requirements:

1. Section 051200 "Structural Steel Framing" for shop priming of metal substrates with primers specified in this Section.
2. Section 055213 "Pipe and Tube Railings" for shop **priming** pipe and tube railings with coatings specified in this Section.

1.3 ACTION SUBMITTALS

A. Product Data: For each type of product indicated. Include preparation requirements and application instructions.

1. Indicate VOC content.

B. Samples for Initial Selection: For each type of topcoat product indicated.

C. Samples for Verification: For each type of coating system and in each color and gloss of topcoat indicated.

1. Submit Samples on rigid backing, 8 inches (200 mm) square.
2. Label each coat of each Sample.

3. Label each Sample for location and application area.

D. Product List: For each product indicated, include the following:

1. Cross-reference to paint system and locations of application areas. Use same designations indicated on Drawings and in schedules.
2. VOC content.

1.4 CLOSEOUT SUBMITTALS

A. Coating Maintenance Manual: Provide coating maintenance manual including area summary with finish schedule, area detail designating location where each product/color/finish was used, product data pages, material safety data sheets, care and cleaning instructions, touch-up procedures, and color samples of each color and finish used.

1.5 MAINTENANCE MATERIAL SUBMITTALS

A. Furnish extra materials, from the same product run, that match products installed and that are packaged with protective covering for storage and identified with labels describing contents.

1. Paint: 1 gal. (3.8 L) of each material and color applied.

1.6 QUALITY ASSURANCE

A. Mockups: Apply mockups of each coating system indicated to verify preliminary selections made under sample submittals and to demonstrate aesthetic effects and set quality standards for materials and execution.

1. Architect will select one surface to represent surfaces and conditions for application of each coating system specified in Part 3.

a. Wall and Ceiling Surfaces: Provide samples of at least 100 sq. ft. (9 sq. m).
b. Other Items: Architect will designate items or areas required.

2. Final approval of color selections will be based on mockups.

a. If preliminary color selections are not approved, apply additional mockups of additional colors selected by Architect at no added cost to Owner.

3. Approval of mockups does not constitute approval of deviations from the Contract Documents contained in mockups unless Architect specifically approves such deviations in writing.

4. Subject to compliance with requirements, approved mockups may become part of the completed Work if undisturbed at time of Substantial Completion

1.7 DELIVERY, STORAGE, AND HANDLING

A. Delivery and Handling: Deliver products to Project site in an undamaged condition in manufacturer's original sealed containers, complete with labels and instructions for handling, storing, unpacking, protecting, and installing. Packaging shall bear the manufacture's label with the following information:

1. Product name and type (description).
2. Batch date.
3. Color number.
4. VOC content.
5. Environmental handling requirements.
6. Surface preparation requirements.
7. Application instructions.

B. Store materials not in use in tightly covered containers in well-ventilated areas with ambient temperatures continuously maintained at not less than 45 deg F (7 deg C).

1. Maintain containers in clean condition, free of foreign materials and residue.
2. Remove rags and waste from storage areas daily.

1.8 FIELD CONDITIONS

A. Apply coatings only when temperature of surfaces to be coated and surrounding air temperatures are between 50 and 95 deg F (10 and 35 deg C).

B. Do not apply coatings when relative humidity exceeds 85 percent; at temperatures less than 5 deg F (3 deg C) above the dew point; or to damp or wet surfaces.

C. Do not apply exterior coatings in snow, rain, fog, or mist.

D. Hazardous Materials: It is not expected that hazardous materials will be encountered in the Work.

1. If suspected hazardous materials are encountered, do not disturb; immediately notify Architect and Owner.

PART 2 - PRODUCTS

2.1 MANUFACTURERS

A. Basis-of-Design Product: Subject to compliance with requirements, provide; products indicated or comparable product from one of the following:

1. Sherwin-Williams Company (The).

B. Comparable Products: Comparable products of approved manufacturers will be considered in accordance with Section 016000 "Product Requirements," and the following:

1. Products are approved by manufacturer in writing for application specified.
2. Products meet performance and physical characteristics of basis of design product including published ratio of solids by volume, plus or minus two percent.

C. Source Limitations: Obtain paint materials from single source from single listed manufacturer.

1. Manufacturer's designations listed on a separate color schedule are for color reference only and do not indicate prior approval.

2.2 HIGH-PERFORMANCE COATINGS, GENERAL

A. Material Compatibility:

1. Provide materials for use within each coating system that are compatible with one another and substrates indicated, under conditions of service and application as demonstrated by manufacturer, based on testing and field experience.
2. For each coat in a coating system, provide products recommended in writing by manufacturers of topcoat for use in coating system and on substrate indicated.
3. Provide products of same manufacturer for each coat in a coating system.

B. Colors: As indicated in color schedule or as selected by Architect from manufacturer's full range.

PART 3 - EXECUTION

3.1 EXAMINATION

A. Examine substrates and conditions, with Applicator present, for compliance with requirements for maximum moisture content and other conditions affecting performance of the Work. Verify suitability of substrates, including surface conditions and compatibility with existing finishes and primers. Where acceptability of substrate conditions is in question, apply samples and perform in-situ testing to verify compatibility, adhesion, and film integrity of new paint application.

1. Report in writing conditions that may affect application, appearance, or performance of paint.

B. Substrate Conditions:

1. Maximum Moisture Content of Substrates: When measured with an electronic moisture meter as follows:

a. Gypsum Board: 12 percent.

2. Gypsum Board Substrates: Verify that finishing compound is sanded smooth.

C. Verify suitability of substrates, including surface conditions and compatibility, with existing finishes and primers.

D. Proceed with coating application only after unsatisfactory conditions have been corrected; application of coating indicates acceptance of surfaces and conditions.

3.2 PREPARATION

A. Comply with manufacturer's written instructions and recommendations in "MPI Architectural Painting Specification Manual" applicable to substrates indicated.

B. Remove hardware, covers, plates, and similar items already in place that are removable and are not to be painted. If removal is impractical or impossible because of size or weight of item, provide surface-applied protection before surface preparation and painting.

   1. After completing painting operations, use workers skilled in the trades involved to reinstall items that were removed. Remove surface-applied protection.

C. Clean substrates of substances that could impair bond of coatings, including dust, dirt, oil, grease, and incompatible paints and encapsulants.

   1. Remove incompatible primers and reprime substrate with compatible primers or apply tie coat as required to produce coating systems indicated.

D. Steel Substrates: Remove rust, loose mill scale, and shop primer if any. Clean using methods recommended in writing by paint manufacturer.

E. Shop-Primed Steel Substrates: Clean field welds, bolted connections, and abraded areas of shop paint, and paint exposed areas with the same material as used for shop priming to comply with SSPC-PA 1 for touching up shop-primed surfaces.

F. Galvanized-Metal Substrates: Remove grease and oil residue from galvanized sheet metal by mechanical methods to produce clean, lightly etched surfaces that promote adhesion of subsequently applied coatings.

G. Aluminum Substrates: Remove loose surface oxidation.

3.3 APPLICATION

A. Apply high-performance coatings according to manufacturer's written instructions and recommendations in "MPI Architectural Painting Specification Manual."

   1. Use applicators and techniques suited for coating and substrate indicated.
   2. Coat surfaces behind movable equipment and furniture same as similar exposed surfaces. Before final installation, coat surfaces behind permanently fixed equipment or furniture with prime coat only.
   3. Coat back sides of access panels, removable or hinged covers, and similar hinged items to match exposed surfaces.
   4. Do not apply coatings over labels of independent testing agencies or equipment name, identification, performance rating, or nomenclature plates.

B. If undercoats or other conditions show through final coat, apply additional coats until cured film has a uniform coating finish, color, and appearance.

C. Apply coatings to produce surface films without cloudiness, spotting, holidays, laps, brush marks, runs, sags, ropiness, or other surface imperfections. Produce sharp glass lines and color breaks.

3.4 FIELD QUALITY CONTROL

A. Dry Film Thickness Testing: Owner may engage the services of a qualified testing and inspecting agency to inspect and test coatings for dry film thickness.

1. Contractor shall touch up and restore coated surfaces damaged by testing.
2. If test results show that dry film thickness of applied coating does not comply with coating manufacturer's written recommendations, Contractor shall pay for testing and apply additional coats as needed to provide dry film thickness that complies with coating manufacturer's written recommendations.

3.5 CLEANING AND PROTECTION

A. At end of each workday, remove rubbish, empty cans, rags, and other discarded materials from Project site.

B. After completing coating application, clean spattered surfaces. Remove spattered coatings by washing, scraping, or other methods. Do not scratch or damage adjacent finished surfaces.

C. Protect work of other trades against damage from coating operation. Correct damage by cleaning, repairing, replacing, and recoating, as approved by Architect, and leave in an undamaged condition.

D. At completion of construction activities of other trades, touch up and restore damaged or defaced coated surfaces.

3.6 EXTERIOR HIGH-PERFORMANCE COATING SCHEDULE

A. Steel Substrates:

1. Pigmented Polyurethane System:

a. Prime Coat: Alkyd anti-corrosive, quick dry:

1) S-W Pro-Cryl Universal Primer, B66-310 Series, at 2.0 to 4.0 mils (0.051 to 0.102 mm) dry, per coat.

b. Intermediate Coat: Polyurethane, two-component, pigmented, matching topcoat.

c. Topcoat: Polyurethane, two-component, pigmented, gloss:

1) S-W Pro Industrial Water based Acrolon 100 Polyurethane, B65-720 Series, at 2.0 to 4.0 mils (0.051 to 0.102 mm) dry, per coat.

2. Pigmented Polyurethane over Epoxy System:

a. Prime Coat: Epoxy, high-build, low gloss:

1) S-W Macropoxy 646-100, B58-600 Series, at 5.0 to 10 mils (0.127 to 0.254 mm) dry, per coat.

a. Intermediate Coat: Polyurethane, two-component, pigmented, matching topcoat.
b. Topcoat: Polyurethane, two-component, pigmented, gloss:

1) S-W Pro Industrial Water based Acrolon 100 Polyurethane, B65-720 Series, at 2.0 to 4.0 mils (0.051 to 0.102 mm) dry, per coat.

3. Pigmented Polyurethane over Epoxy Zinc-Rich Primer System:

a. Prime Coat: Primer, zinc-rich, epoxy:

1) S-W Zinc Clad III HS 100, at 3.0 to 5.0 mils (0.076 to 0.127 mm) dry, per coat.

b. Intermediate Coat: Epoxy, high-build, low gloss:

1) S-W Macropoxy 646-100, B58-600 Series, at 5.0 to 10 mils (0.127 to 0.254 mm) dry, per coat.

c. Topcoat: Polyurethane, two-component, pigmented, gloss:

1) S-W Pro Industrial Water based Acrolon 100 Polyurethane, B65-720 Series, at 2.0 to 4.0 mils (0.051 to 0.102 mm) dry, per coat.

B. Galvanized-Metal Substrates:

1. Pigmented Polyurethane over Vinyl Wash Primer System:

a. Prime Coat: Primer, vinyl wash:

1) S-W DTM Wash Primer, B71Y1, at 0.7 to 1.3 mils (0.018 to 0.033 mm) dry, per coat.

b. First Topcoat: Polyurethane, two-component, pigmented, matching topcoat.
c. Second Topcoat: Polyurethane, two-component, pigmented, gloss:

1) S-W Pro Industrial Water based Acrolon 100 Polyurethane, B65-720 Series, at 2.0 to 4.0 mils (0.051 to 0.102 mm) dry, per coat.

C. Aluminum (Not Anodized or Otherwise Coated) Substrates:

1. Pigmented Polyurethane System:

a. Prime Coat: Primer, vinyl wash:

1) S-W DTM Wash Primer, at 0.2 to 0.4 mils (0.005 to 0.010 mm) dry, per coat.

b. First Topcoat: Polyurethane, two-component, pigmented, matching topcoat.
c. Second Topcoat: Polyurethane, two-component, pigmented, gloss:

1) S-W Pro Industrial Water based Acrolon 100 Polyurethane, B65-720 Series, at 2.0 to 4.0 mils (0.051 to 0.102 mm) dry, per coat.

3.7 INTERIOR HIGH-PERFORMANCE COATING SCHEDULE

A. Steel Substrates:

1. Epoxy-Modified Latex System:

a. Prime Coat: Primer, rust-inhibitive, water based:

1) S-W Pro-Cryl Universal Primer, B66-310 Series, at 2.0 to 4.0 mils (0.051 to 0.102 mm) dry, per coat.

b. Intermediate Coat: Epoxy-modified latex, interior, gloss matching topcoat.
c. Topcoat: Epoxy-modified latex, interior, eggshell:

1) S-W Pro Industrial Water based Catalyzed Epoxy Eggshell, B73-300 Series, at 2.0 to 4.0 mils (0.051 to 0.102 mm) dry, per coat.

d. Topcoat: Epoxy-modified latex, interior, gloss:

1) S-W Pro Industrial Water based Catalyzed Epoxy Gloss, B73-300 Series, at 2.0 to 4.0 mils (0.051 to 0.102 mm) dry, per coat.

2. Pre-Catalyzed Water based Epoxy System:

a. Prime Coat: Primer, rust-inhibitive, water based:

1) S-W Pro-Cryl Universal Primer, B66-310 Series, at 2.0 to 4.0 mils (0.051 to 0.102 mm) dry, per coat.

b. Intermediate Coat: Light industrial coating, interior, water based, matching topcoat.
c. Topcoat: Epoxy-modified latex, interior, eggshell:

1) S-W Pro Industrial Pre-Catalyzed Water based Epoxy Eggshell, K45 Series, at 1.5 mils (0.038 mm) dry, per coat.

d. Topcoat: Epoxy-modified latex, interior, semi-gloss:

1) S-W Pro Industrial Pre-Catalyzed Water based Epoxy Semi-Gloss, K46 Series, at 1.5 mils (0.038 mm) dry, per coat.

3. Pigmented Polyurethane over Epoxy Primer System:

a. Prime Coat: Primer, epoxy, anti-corrosive, for metal:

1) S-W Macropoxy 646-100, B58-600 Series, at 5.0 to 10 mils (0.127 to 0.254 mm) dry, per coat.

b. Intermediate Coat: Polyurethane, two-component, pigmented, matching topcoat.

c. Topcoat: Polyurethane, two-component, pigmented, gloss:

1) S-W Pro Industrial Water based Acrolon 100 Polyurethane, B65-720 Series, at 2.0 to 4.0 mils (0.051 to 0.102 mm) dry, per coat.

4. Pigmented Polyurethane over Epoxy Zinc-Rich Primer System:

a. Prime Coat: Primer, zinc-rich, epoxy:

1) S-W Zinc Clad III HS 100, at 3.0 to 5.0 mils (0.076 to 0.127 mm) dry, per coat.

b. Intermediate Coat: Primer, epoxy, anti-corrosive, for metal:

1) S-W Macropoxy 646-100, B58-600 Series, B73-620 Series, at 5.0 to 10 mils (0.127 to 0.254 mm) dry, per coat.

c. Topcoat: Polyurethane, two-component, pigmented, gloss:

1) S-W Pro Industrial Water based Acrolon 100 Polyurethane, B65-720 Series, at 2.0 to 4.0 mils (0.051 to 0.102 mm) dry, per coat.

B. Galvanized-Metal Substrates:

1. Pre-Catalyzed Water based Epoxy System:

a. Prime Coat: Primer, rust-inhibitive, water based:

1) S-W Pro-Cryl Universal Primer, B66-310 Series, at 2.0 to 4.0 mils (0.051 to 0.102 mm) dry, per coat.

b. Intermediate Coat: Light industrial coating, interior, water based, matching topcoat.

c. Topcoat: Epoxy-modified latex, interior, eggshell:

1) S-W Pro Industrial Pre-Catalyzed Water based Epoxy Eggshell, K45 Series, at 1.5 mils (0.038 mm) dry, per coat.

d. Topcoat: Epoxy-modified latex, interior, semi-gloss:

1) S-W Pro Industrial Pre-Catalyzed Water based Epoxy Semi-Gloss, K46 Series, at 1.5 mils (0.038 mm) dry, per coat.

2. Pigmented Polyurethane System:

a. Prime Coat: Primer, vinyl wash:

1) S-W DTM Wash Primer, B71Y1, at 0.7 to 1.3 mils (0.018 to 0.033 mm) dry, per coat.

b. Intermediate Coat: Polyurethane, two-component, pigmented, matching topcoat.
c. Topcoat: Polyurethane, two-component, pigmented, gloss:

1) S-W Pro Industrial Water based Acrolon 100 Polyurethane, B65-720 Series, at 2.0 to 4.0 mils (0.051 to 0.102 mm) dry, per coat.

C. Aluminum (Not Anodized or Otherwise Coated) Substrates:

1. Pigmented Polyurethane System:

a. Prime Coat: Primer, vinyl wash:

1) S-W DTM Wash Primer, B71Y1, at 0.7 to 1.3 mils (0.018 to 0.033 mm) dry, per coat.

b. Intermediate Coat: Polyurethane, two-component, pigmented, matching topcoat.
c. Topcoat: Polyurethane, two-component, pigmented, gloss:

1) S-W Pro Industrial Water based Acrolon 100 Polyurethane, B65-720 Series, at 2.0 to 4.0 mils (0.051 to 0.102 mm) dry, per coat.

D. Gypsum Board Substrates:

1. Epoxy System:

a. Prime Coat: Primer sealer, latex, interior:

1) S-W ProMar 200 Zero VOC Interior Latex Primer, B28W2600, at 1.0 mils (0.025 mm) dry, per coat.

b. Intermediate Coat: Epoxy, gloss matching topcoat.
c. Topcoat: Epoxy, semi-gloss:

1) S-W Macropoxy 646-100, B58-600 Series, at 5.0 to 10 mils (0.127 to 0.254 mm) dry, per coat.

2. Pre-Catalyzed Water based Epoxy System:

a. Prime Coat: Primer sealer, latex, interior:

1) S-W ProMar 200 Zero VOC Interior Latex Primer, B28W2600, at 1.0 mils (0.025 mm) dry, per coat.

b. Intermediate Coat: Light industrial coating, interior, water based, matching topcoat.
c. Topcoat: Epoxy-modified latex, interior, eggshell:

1) S-W Pro Industrial Pre-Catalyzed Water based Epoxy Eggshell, K45 Series, at 1.5 mils (0.038 mm) dry, per coat.

d. Topcoat: Epoxy-modified latex, interior, semi-gloss:

1) S-W Pro Industrial Pre-Catalyzed Water based Epoxy Semi-Gloss, K46 Series, at 1.5 mils (0.038 mm) dry, per coat.

END OF SECTION 099600

SECTION 101419 - DIMENSIONAL LETTER SIGNAGE

PART 1 - GENERAL

1.1 RELATED DOCUMENTS

A. Drawings and general provisions of the Contract, including General and Supplementary Conditions and Division 01 Specification Sections, apply to this Section.

1.2 SUMMARY

A. Section Includes:

1. Illuminated, fabricated channel dimensional characters.

1.3 ALLOWANCES

A. Allowances for illuminated, fabricated channel dimensional characters are specified in Section 012100 "Allowances."

B. The electrical circuit from the panel to the raceway shall be included in the base bid and not be part of the Building Identification allowance.

1.4 DEFINITIONS

A. Illuminated: Illuminated by lighting source integrally constructed as part of the sign unit.

1.5 COORDINATION

A. Furnish templates for placement of electrical service embedded in permanent construction by other installers.

B. Furnish templates for placement of blocking for the mounting hardware embedded in permanent construction by other installers.

1.6 ACTION SUBMITTALS

A. Product Data: For each type of product.

B. Shop Drawings: For signs.

1. Include fabrication and installation details and attachments to other work.
2. Show sign mounting heights, locations of supplementary supports to be provided by other installers, and accessories.

3. Show message list, typestyles, graphic elements, and layout for each sign at least 1/4" scale.
4. Show locations of electrical service connections.
5. Include diagrams for power, signal, and control wiring.

C. Samples for Initial Selection: For each type of sign assembly, exposed component, and exposed finish.

1. Include representative Samples of available typestyles and graphic symbols.

D. Samples for Verification: For each type of sign assembly showing all components and with the required finish(es), in manufacturer's standard size unless otherwise indicated and as follows:

1. Dimensional Characters: Half-size Sample of each type of dimensional character.
2. Exposed Accessories: Half-size Sample of each accessory type.

E. Product Schedule: For dimensional letter signs. Use same designations indicated on Drawings or specified.

F. Delegated-Design Submittal: For fabricated channel dimensional characters **indicated in "Performance Requirements" Article**.

1. Include structural analysis calculations for signs indicated to comply with design loads; signed and sealed by the qualified professional engineer responsible for their preparation.

1.7 INFORMATIONAL SUBMITTALS

A. Qualification Data: For Installer and manufacturer.

B. Sample Warranty: For special warranty.

1.8 CLOSEOUT SUBMITTALS

A. Maintenance Data: For signs to include in maintenance manuals.

1.9 QUALITY ASSURANCE

A. Installer Qualifications: An entity that employs installers and supervisors who are trained and approved by manufacturer.

1.10 FIELD CONDITIONS

A. Field Measurements: Verify locations of electrical service embedded in permanent construction by other installers by field measurements before fabrication, and indicate measurements on Shop Drawings.

1.11 WARRANTY

A. Special Warranty: Manufacturer agrees to repair or replace components of signs that fail in materials or workmanship within specified warranty period.

1. Failures include, but are not limited to, the following:

a. Deterioration of finishes beyond normal weathering.
b. Separation or delamination of sheet materials and components.

2. Warranty Period: 2 years from date of Substantial Completion.

PART 2 - PRODUCTS

2.1 PERFORMANCE REQUIREMENTS

A. Delegated Design: Engage a qualified professional engineer, as defined in Section 014000 "Quality Requirements," to design sign structure and anchorage of dimensional character sign type(s) according to structural performance requirements.

B. Structural Performance: Signs and supporting elements shall withstand the effects of gravity and other loads within limits and under conditions indicated.

1. Uniform Wind Load: As indicated on Drawings.
2. Concentrated Horizontal Load: As indicated on Drawings.
3. Other Design Load: As indicated on Drawings.
4. Uniform and concentrated loads need not be assumed to act concurrently.

C. Thermal Movements: For exterior fabricated channel dimensional characters, allow for thermal movements from ambient and surface temperature changes.

1. Temperature Change: 120 deg F (67 deg C), ambient; 180 deg F (100 deg C), material surfaces.

D. Electrical Components, Devices, and Accessories: Listed and labeled as defined in NFPA 70, by a qualified testing agency, and marked for intended location and application.

2.2 DIMENSIONAL CHARACTERS

A. Fabricated Channel Characters Translucent face with metal side returns, formed free from warp and distortion; with uniform faces, sharp corners, and precisely formed lines and profiles; internally braced for stability, to meet structural performance loading without oil-canning or other surface deformation, and for securing fasteners; and as follows.
1. Designer Sign Systems, LLC, 189 Meister Ave., Branchburg, NJ 08876 / Ph. 201.939.5577
2. NorthStar Signs Inc, 66 Clinton Road, Fairfield NJ 07004 / Ph. 973. 244.1144
3. Or approved equal.

B. Illuminated Characters: Front lighted character construction with color changeable LED lighting, including transformers, insulators, and other accessories for operability, with provision for servicing and concealing connections to building electrical system. Use tight or sealed joint construction to prevent unintentional light leakage. Space lamps apart from each other and away from character surfaces as needed to illuminate evenly.

1. Retain "Power" Subparagraph below to suit Project. Consult manufacturer for power requirements and coordinate with Project electrical engineer. An array of characters or each character separately may require a power supply.

    a. Power: As indicated on electrical Drawings.
    b. Weeps: Provide weep holes to drain water at lowest part of exterior characters. Equip weeps with permanent baffles to block light leakage without inhibiting drainage.

2. Character Material: Sheet or plate stainless steel.
3. Material Thickness: 0.050 inch (1.27 mm) thick for face and 0.031 inch (0.79 mm) thick for returns.
4. Translucent Face Sheet: Acrylic sheet with integral color as selected by Architect from manufacturer's full range.

    a. Sheet Thickness: Manufacturer's standard thickness for size of character.

5. Character Height: As indicated on Drawings.
6. Character Depth: As indicated on Drawings.
7. Finishes:

    a. Integral Metal Finish: As selected by Architect from full range of industry finishes.
    b. Integral Stainless-Steel Finish: As selected by Architect from full range of industry finishes.
    c. Overcoat: Manufacturer's standard baked-on clear coating.

8. Mounting: Projecting stainless-steel studs.

    a. Hold characters at minimum of 2-inch (51-mm) distance or [manufacturer's recommended distance from wall surface.

9. Typeface: As selected by Architect from full range of industry typeface.

2.3 DIMENSIONAL CHARACTER MATERIALS

A. Stainless-Steel Sheet: ASTM A240/A240M or ASTM A666, Type 316, stretcher-leveled standard of flatness.

B. Zinc Castings: ASTM B240, alloy and temper recommended by sign manufacturer for type of use and finish indicated.

C. Acrylic Sheet: ASTM D4802, category as standard with manufacturer for each sign, Type UVF (UV filtering).

D. Paints and Coatings for Sheet Materials: Inks, dyes, and paints that are recommended by manufacturer for optimum adherence to surface and are UV and water resistant for colors and exposure indicated.

2.4 ACCESSORIES

A. Fasteners and Anchors: Manufacturer's standard as required for secure anchorage of signs, noncorrosive and compatible with each material joined, and complying with the following:

1. Use concealed fasteners and anchors unless indicated to be exposed.
2. For exterior exposure, furnish stainless-steel devices unless otherwise indicated.
3. Exposed Metal-Fastener Components, General:

    a. Fabricated from same basic metal and finish of fastened metal unless otherwise indicated.
    b. Fastener Heads: For nonstructural connections, use flathead or oval countersunk screws and bolts with tamper-resistant Allen-head slots unless otherwise indicated.

4. Sign Mounting Fasteners:

    a. Concealed Studs: Concealed (blind), threaded studs welded or brazed to back of sign material, screwed into back of sign assembly, or screwed into tapped lugs cast integrally into back of cast sign material, unless otherwise indicated.
    b. Projecting Studs: Threaded studs with sleeve spacer, welded or brazed to back of sign material, screwed into back of sign assembly, or screwed into tapped lugs cast integrally into back of cast sign material, unless otherwise indicated.
    c. Through Fasteners: Exposed metal fasteners matching sign finish, with type of head indicated, installed in predrilled holes.

B. Adhesive: As recommended by sign manufacturer.

C. Bituminous Paint: Cold-applied asphalt emulsion complying with ASTM D1187/D1187M.

2.5 FABRICATION

A. General: Provide manufacturer's standard sign assemblies according to requirements indicated.

1. Preassemble signs and assemblies in the shop to greatest extent possible. Disassemble signs and assemblies only as necessary for shipping and handling limitations. Clearly mark units for reassembly and installation; apply markings in locations concealed from view after final assembly.
2. Mill joints to a tight, hairline fit. Form assemblies and joints exposed to weather to resist water penetration and retention.
3. Comply with AWS for recommended practices in welding and brazing. Provide welds and brazes behind finished surfaces without distorting or discoloring

exposed side. Clean exposed welded and brazed connections of flux, and dress exposed and contact surfaces.

4. Conceal connections if possible; otherwise, locate connections where they are inconspicuous.
5. Internally brace dimensional characters for stability, to meet structural performance loading without oil-canning or other surface deformation, and for securing fasteners.
6. Provide rabbets, lugs, and tabs necessary to assemble components and to attach to existing work. Drill and tap for required fasteners. Use concealed fasteners where possible; use exposed fasteners that match sign finish.
7. Castings: Fabricate castings free of warp, cracks, blowholes, pits, scale, sand holes, and other defects that impair appearance or strength. Grind, wire brush, sandblast, and buff castings to remove seams, gate marks, casting flash, and other casting marks before finishing.

B. Brackets: Fabricate brackets, fittings, and hardware for bracket-mounted signs to suit sign construction and mounting conditions indicated. Modify manufacturer's standard brackets as required.

1. Stainless-Steel Brackets: Factory finish brackets to match sign background finish unless otherwise indicated.

2.6 GENERAL FINISH REQUIREMENTS

A. Protect mechanical finishes on exposed surfaces from damage by applying a strippable, temporary protective covering before shipping.

B. Appearance of Finished Work: Noticeable variations in same piece are not acceptable. Variations in appearance of adjoining components are acceptable if they are within the range of approved Samples and are assembled or installed to minimize contrast.

C. Directional Finishes: Run grain with long dimension of each piece and perpendicular to long dimension of finished trim or border surface unless otherwise indicated.

D. Organic, Anodic, and Chemically Produced Finishes: Apply to formed metal after fabrication but before applying contrasting polished finishes on raised features unless otherwise indicated.

2.7 STAINLESS-STEEL FINISHES

A. Surface Preparation: Remove tool and die marks and stretch lines, or blend into finish.

B. Polished Finishes: Grind and polish surfaces to produce uniform finish, free of cross scratches.

1. When polishing is completed, passivate and rinse surfaces. Remove embedded foreign matter and leave surfaces chemically clean.
2. Directional Satin Finish: No. 4.
3. Dull Satin Finish: No. 6.
4. Reflective, Directional Polish: No. 7.

5. Mirrorlike Reflective, Nondirectional Polish: No. 8.

2.8 CLEAR ORGANIC COATING FOR COPPER-ALLOY FINISHES

A. Clear Organic Coating: Clear, waterborne, air-drying, acrylic lacquer called "Incralac"; specially developed for coating copper-alloy products; consisting of a solution of methyl methacrylate copolymer with benzotriazole to prevent breakdown of the film in UV light; shop applied in two uniform coats according to manufacturer's written instructions, with interim drying between coats and without runs or other surface imperfections, to a total dry film thickness of 1 mil (0.025 mm).

PART 3 - EXECUTION

3.1 EXAMINATION

A. Examine substrates, areas, and conditions, with Installer present, for compliance with requirements for installation tolerances and other conditions affecting performance.

B. Verify that sign-support surfaces are within tolerances to accommodate signs without gaps or irregularities between backs of signs and support surfaces unless otherwise indicated.

C. Verify that electrical service is correctly sized and located to accommodate signs.

D. Proceed with installation only after unsatisfactory conditions have been corrected.

3.2 INSTALLATION

A. General: Install signs using mounting methods indicated and according to manufacturer's written instructions.

1. Install signs level, plumb, true to line, and at locations and heights indicated, with sign surfaces free of distortion and other defects in appearance.
2. Before installation, verify that sign surfaces are clean and free of materials or debris that would impair installation.
3. Corrosion Protection: Coat concealed surfaces of exterior aluminum in contact with grout, concrete, masonry, wood, or dissimilar metals, with a heavy coat of bituminous paint.

B. Mounting Methods:

1. Projecting Studs: Using a template, drill holes in substrate aligning with studs on back of sign. Remove loose debris from hole and substrate surface.

a. Masonry Substrates: Fill holes with adhesive. Leave recess space in hole for displaced adhesive. Place spacers on studs, place sign in position, and push until spacers are pinched between sign and substrate, embedding the stud ends in holes. Temporarily support sign in position until adhesive fully sets.

b. Thin or Hollow Surfaces: Place spacers on studs, place sign in position with spacers pinched between sign and substrate, and install washers and nuts on stud ends projecting through opposite side of surface, and tighten.

3.3 ADJUSTING AND CLEANING

A. Remove and replace damaged or deformed characters and signs that do not comply with specified requirements. Replace characters with damaged or deteriorated finishes or components that cannot be successfully repaired by finish touchup or similar minor repair procedures.

B. Remove temporary protective coverings and strippable films as signs are installed.

C. On completion of installation, clean exposed surfaces of signs according to manufacturer's written instructions, and touch up minor nicks and abrasions in finish. Maintain signs in a clean condition during construction and protect from damage until acceptance by Owner.

END OF SECTION 101419

SECTION 104250 – SIGNAGE

PART 1 - GENERAL

1.1 RELATED DOCUMENTS

A. Drawings and general provisions of the Contract, including General and Supplementary Conditions and Division 1 Specification Sections, apply to this Section.

1.2 SUMMARY

A. This Section includes the following:

1. Room and Function Label Signs

B. Related Sections include the following:

1. Refer to Division 1 Section "Allowances" for the allowance sum to furnish and install the signage.
2. Refer to section 101419-Dimensional Letter Signage for building identification signage / exterior aluminum letters
3. Refer to Division 21 for signage requirements related to Fire Protection systems.
4. Refer to Division 22 & 23 for signage requirements related to Mechanical systems.
5. Refer to Division 26 for signage requirements related to Electrical systems.

1.3 DEFINITIONS

A. ADA-ABA Accessibility Guidelines: U.S. Architectural & Transportation Barriers Compliance Board's "Americans with Disabilities Act (ADA) Accessibility Guidelines for Buildings and Facilities; Architectural Barriers Act (ABA) Accessibility Guidelines."

1.4 SUBMITTALS

A. Product Data: For each type of product indicated.

B. Samples for Initial Selection: Manufacturer's color charts consisting of actual units or sections of units showing the full range of colors available for the following:

1. Aluminum.
2. Acrylic sheet.
3. Polycarbonate sheet.

C. Sign Schedule: Use same designations indicated on Drawings or as provided by way of the approved schedule.

D. Maintenance Data: For signs to include in maintenance manuals.

E. Warranty: Special warranty specified in this Section.

1.5 QUALITY ASSURANCE

A. Installer Qualifications: Fabricator of products. And installer of signage.

B. Fabricator Qualifications: Shop that employs skilled workers who custom-fabricate products similar to those required for this Project and whose products have a record of successful in-service performance of fabrication and installation.

C. Source Limitations for Signs: Obtain each sign type indicated from one source from a single manufacturer.

D. Regulatory Requirements: Comply with applicable provisions in ADA-ABA Accessibility Guidelines and ICC/ANSI A117.1.

1.6 PROJECT CONDITIONS

A. Weather Limitations: Proceed with installation only when existing and forecasted weather conditions permit installation of signs in exterior locations to be performed according to manufacturers' written instructions and warranty requirements.

B. Field Measurements: Verify recess openings by field measurements before fabrication and indicate measurements on Shop Drawings.

1.7 COORDINATION

A. Coordinate placement of anchorage devices with templates for installing signs.

1.8 WARRANTY

A. Special Warranty: Manufacturer's standard form in which manufacturer agrees to repair or replace components of signs that fail in materials or workmanship within specified warranty period.

1. Failures include, but are not limited to, the following:

   a. Deterioration of finishes beyond normal weathering.
   b. Deterioration of embedded graphic image colors and sign lamination.

2. Warranty Period: One year from date of Substantial Completion.

PART 2 - PRODUCTS

2.1 MANUFACTURED UNITS

A. Acceptable manufacturers:
   1. Designer Sign Systems (Basis of specification), 352 Washington Avenue, Carlstadt, NJ.
      201-939-5577 ext. 133.

2. Lettera Signs, 1209 Bronx River Avenue, Bronx, NY.

3. APCO, 388 Grant Street SE, Atlanta, Georgia.

2.2 MATERIALS

A. ADA plaque Signs. (Applied letters or Photopolymer are not acceptable).

1. Construction: signs shall be .015 semi gloss polycarbonate film with the copy embossed from the back surface and filled solid with manufactures standard letter colors. Polycarbonate sheet to be adhered to 1/8" clear acrylic using a continuous .010 double sided polyester film adhesive on the entire sign back.
2. Tactile Copy: precision emboss tactile copy and Grade II Braille a minimum of 1/32" and form an integral part of the sign face. Braille is to be domed and the same color as the sign background with no interruption of the smooth clean surface of the sign. All panel edges routed to a smooth finish.

3. Optional fabrication method using one piece cast resin is an approved construction method. Any signs used on the exterior of the building shall be fabricated using the cast rein method.

4. Sign Panel Color: Choice of manufacturer's full product line of standard panel colors.

   a. All colors to be on second surface between lamination and integral to the material.

   b. Signs with removable inserts will have a 1/16" backer panel, with a slot to accept inserts. Message slot sizes to be determined in the shop drawing review.

   c. Slots for removable inserts created by using foam tape will not be allowed.

B. Non-ADA SIGN construction: signs shall be .015 semi-gloss (matte) polycarbonate film with the copy applied to the back surface using manufactures standard letter colors. Polycarbonate sheet to be adhered to 1/8" clear acrylic using a continuous .010 double sided polyester film adhesive on the entire sign back. Optional fabrication technique can be a one piece 1/8" acrylic with copy applied to the back surface prior to the application of the background colors.

2.3 ACCESSORIES

A. Anchors and Inserts: Provide nonferrous-metal or hot-dip galvanized anchors and inserts for exterior installations and elsewhere as required for corrosion resistance. Use toothed steel or lead expansion-bolt devices for drilled-in-place anchors. Furnish inserts, as required, to be set into concrete or masonry work.

2.4 FABRICATION

A. General: Provide manufacturer's standard signs of configurations indicated.

1. Pre-assemble signs in the shop to greatest extent possible. Disassemble signs only as necessary for shipping and handling limitations. Clearly mark units for reassembly and installation, in location not exposed to view after final assembly.
2. Conceal fasteners if possible; otherwise, locate fasteners where they will be inconspicuous.

2.5 FINISHES, GENERAL

A. Protect mechanical finishes on exposed surfaces from damage by applying a strippable, temporary protective covering before shipping.

B. Appearance of Finished Work: Variations in appearance of abutting or adjacent pieces are acceptable if they are within one-half of the range of approved Samples. Noticeable variations in the same piece are not acceptable. Variations in appearance of other components are acceptable if they are within the range of approved Samples and are assembled or installed to minimize contrast.

PART 3 - EXECUTION

3.1 SCHEDULE

A. Room and Function Label Signs

1. Metal or plastic panel signs with raised characters and graphics for all spaces.

2. Room or function labels applied to doors or walls immediately adjacent to doorways.

3. Wall-mounted corridor signs or signs intended for viewing at less than 5′: Minimum character height of 5/8″ and maximum of 2″.

4. Signs mounted above head height or intended for viewing at more than 10′: Minimum character height of 3″.

5. Provide facility signs (approximately 7" x 7") to identify each respective office suite. Signage shall be located on the corridor wall beside the main entrance into each suite (or room) from the corridor.

6. Function labels: Provide graphic and tactile signs for the following building services and functions:
   a. Stairways.
   b. Room numbers and labels.

B. Room Occupancy Signs

1. Provide room occupancy signs 8 x 12 “using Non ADA plaque fabrication method.

2. Provide signs with feature allowing district to change information without damage or modification to other building elements.

C. Provide general information signage to locate fire extinguishers and fire doors.

D. Identify floor levels at each stair and elevator lobby.

E. Provide code-required signage for the following:

1. Metal or plastic panel signs with raised characters and graphics.

2. Interior Code Signage: Provide signage as required by accessibility regulations and requirements of authorities having jurisdiction. These include but are not limited to, the following:
   a. Room signs on all doors from corridors and interior rooms other than closets.
   b. Fire Doors: Text: FIRE DOOR - KEEP CLOSED
   c. Room Capacity: Provide one at each assembly space within the contract limits
   d. Elevator Signs: One per floor. Text - IN CASE OF FIRE DO NOT USE ELEVATORS - USE STAIRS.
   e. Stairway Identification - At locations indicated. Text - "STAIRS"
   f. Live Load Capacity: One per floor (above grade).
   g. Signs for Accessible Spaces or to define accessible route - As indicated. Text to be determined.

F. Provide permanent signage for all safety specialties in accordance with code including but not limited to:

1. Identifying emblems for structures with truss construction:
   a. Identifying emblems shall be permanently affixed to the front of structures with truss construction as required by N.J.A.C. 5:70-2.20. 1.The emblem shall be of a bright and reflective color, or made of reflective material. The shape of the emblem shall be an isosceles triangle and the size shall be 12 inches horizontally by six inches vertically. The following letters, of a size and color to make them conspicuous, shall be printed on the emblem:
      i. "F" to signify a floor with truss construction
      ii. "R" to signify a roof with truss construction; or
      iii. "F/R" to signify both a floor and roof with truss construction. 2.The emblem shall be permanently affixed to the left of the main entrance door at a height between four and six feet above the ground and shall be installed and maintained by the owner of the building.

G. Provide permanent signage for all fire protection specialties in accordance with code.

H. Submit professionally designed templates from sign manufacturer for layout and placement of each sign and corresponding elevation drawings for approval by the Authority

I. Internet Protocol Digital Video Surveillance System Signage

1. Provide a video surveillance signage at all entrances (indoor & outdoor) and school main lobby. The signage shall read "This building is under video surveillance that may be monitored and / or recorded at any time."

3.2 EXAMINATION

A. Examine substrates, areas, and conditions, with Installer present, for compliance with requirements for installation tolerances and other conditions affecting performance of work.

B. Verify that items, including anchor inserts, are sized and located to accommodate signs.

C. Proceed with installation only after unsatisfactory conditions have been corrected.

3.3. INSTALLATION

A. Locate signs and accessories where indicated, using mounting methods of types described and complying with manufacturer's written instructions.

1. Install signs level, plumb, and at heights indicated, with sign surfaces free of distortion and other defects in appearance.
2. Interior Wall Signs: Install signs on walls adjacent to latch side of door where applicable. Where not indicated or possible, such as double doors, install signs on nearest adjacent walls. Locate to allow approach within 3 inches (75 mm) of sign without encountering protruding objects or standing within swing of door.

B. Wall-Mounted Signs: Comply with sign manufacturer's written instructions except where more stringent requirements apply.

1. Use 3m 1/16' white foam tape and clear silicone adhesive. Attach signs for secure attachment to substrate as recommended in writing by sign manufacturer.

C. Exterior Wall-Mounted Signs: Comply with sign manufacturer's written instructions except where more stringent requirements apply.

3.4 CLEANING AND PROTECTION

A. After installation, clean soiled sign surfaces according to manufacturer's written instructions. Protect signs from damage until acceptance by Owner.

END OF SECTION 104250

SECTION 105220 - FIRE EXTINGUISHERS, CABINETS AND ACCESSORIES

PART 1 - GENERAL

1.1 RELATED DOCUMENTS

A. Drawings and general provisions of the Contract, including General and Supplementary Conditions and Division 1 Specification Sections, apply to this Section.

1.2 SUMMARY

A. This Section includes the following:

1. Fire extinguishers.
2. Fire extinguisher cabinets.

1.3 SUBMITTALS

A. General: Submit the following according to the Conditions of the Contract and Division 1 Specification Sections.

B. Product data for cabinets include rough-in dimensions, details showing mounting methods, relationships of box and trim to surrounding construction, door hardware, cabinet type and materials, trim style, door construction, panel style, and materials.

C. Samples for initial selection purposes in the form of manufacturer's color charts consisting of actual units or sections of units showing full range of colors, textures, and patterns available for each type of cabinet finish indicated or exposed to view.

D. Samples for verification purposes in full-size units of each type of cabinet finish indicated, and in sets for each color, texture, and pattern specified, showing the full range of variations.

1.4 QUALITY ASSURANCE

A. Single-Source Responsibility: Obtain extinguishers and cabinets from one source from a single manufacturer.

B. Coordination: Verify that cabinets are sized to accommodate type and capacity of extinguishers indicated and provided by Owner under separate Contract.

C. UL-Listed Products: Fire extinguishers shall be UL listed with UL listing mark for type, rating, and classification of extinguisher.

D. FM-Listed Products: Fire extinguishers approved by Factory Mutual Research Corporation for type, rating, and classification of extinguisher with FM marking.

PART 2 - PRODUCTS

2.1 MANUFACTURERS

A. Available Manufacturers: Subject to compliance with requirements, manufacturers offering products that may be incorporated in the Work include, but are not limited to, the following:
   1. Ansul Fire Protection.
   2. Badger-Powhatan.
   3. American Specialties Inc.
   4. Bobrick Washroom Equipment, Inc.
   5. Croker Div., Fire-End and Croker Corp.
   6. Filtrine Manufacturing.
   7. Lyon Metal Products.
   8. J.L. Industries.
   9. Larsen's Manufacturing Co.
   10. Modern Metal Products by Muckle.
   11. Potter-Roemer, Inc.
   12. Samson Metal Products, Inc.
   13. Or approved equal.

2.2 FIRE EXTINGUISHERS

A. General: Provide fire extinguishers for each cabinet and other locations indicated, in colors and finishes selected by Architect from manufacturer's standard, that comply with authorities having jurisdiction.

B. Multipurpose Dry Chemical Type: UL-rated 4-A:60-B:C, 10-lb nominal capacity, in enameled steel container.

   1. MP-10 as manufactured by Larsen's Manufacturing Co.

2.3 CABINETS

A. Construction: Manufacturer's standard box, with trim, frame, door, and hardware to suit cabinet type, trim style, and door style indicated. Weld joints and grind smooth. Miter and weld perimeter door frames.

B. Non-Fire Rated, Fully Recessed Cabinet:

   1. AL-2409-R2, as manufactured by Larsen's Manufacturing Co.

C. Cabinet Mounting: Suitable for the following mounting conditions:

   1. Recessed: Cabinet box (tub) fully recessed in walls of sufficient depth to suit style of trim indicated.

D. Trim Style: Fabricate trim in one piece with corners mitered, welded, and ground smooth.

1. Exposed Trim: One-piece combination trim and perimeter door frame overlapping surrounding wall surface with exposed trim face and wall return at outer edge (backbend).
   a. Rolled edge trim with 2½ (or 3-1/2") inch backbend depth.
   b. Trim Metal: Of same metal and finish as door.

H. Door Material and Construction: Manufacturer's standard door construction, of material indicated, coordinated with cabinet types and trim styles selected.
   1. Stainless Steel: Manufacturer's standard door construction, fabricated from austenitic stainless steel complying with ASTM A 167, for AISI Type 316.
   2. Aluminum: Manufacturer's standard door construction, fabricated from aluminum with anodized finish, color to be selected by Architect
   3. Door Glazing: Fully tempered float glass complying with ASTM C 1048, Condition A, Type I, Quality q3, Kind FT, Class as follows:
      a. Class 1 (clear).

I. Identify fire extinguisher in cabinet with FIRE EXTINGUISHER lettering applied to door. Provide lettering to comply with authorities having jurisdiction for letter style, color, size, spacing, and location.

   1. Application Process: Etched.

J. Door Hardware: Provide manufacturer's standard door-operating hardware of proper type for cabinet type, trim style, and door material and style indicated. Provide either lever handle with cam-action latch, or exposed or concealed door pull and friction latch. Provide concealed or continuous-type hinge permitting door to open 180 deg.

2.4 FINISHES FOR CABINETS, GENERAL

A. Comply with NAAMM "Metal Finishes Manual" for recommendations relative to applying and designating finishes.

B. Protect mechanical finishes on exposed surfaces from damage by applying temporary strippable protective covering prior to shipping.

2.5 STAINLESS STEEL CABINET FINISHES

A. Remove or blend tool and die marks and stretch lines into finish.

B. Grind and polish surfaces to produce uniform-directional, textured polished finish indicated, free of cross scratches. Run grain with long dimension of each piece.

   1. 180-Grit Polished Finish: Oil-ground, uniform, textured finish.

C. Passivate and rinse surfaces after polishing. Remove embedded foreign matter and leave surfaces chemically clean.

D. Obscure Acrylic Colors: Provide color or combination of colors selected from manufacturer's standard colors.

PART 3 - EXECUTION

3.1 EXAMINATION

A. Examine walls and partitions for thickness and framing for cabinets to verify cabinet depth and mounting prior to cabinet installation.

B. Do not proceed until unsatisfactory conditions have been corrected.

3.2 INSTALLATION

A. Follow manufacturer's printed instructions for installation.

B. Install in locations and at mounting heights indicated or, if not indicated, at heights to comply with applicable regulations of governing authorities.

1. Prepare recesses in walls for cabinets as required by type and size of cabinet and style of trim and to comply with manufacturer's instructions.
2. Fasten mounting brackets and cabinets to structure, square and plumb.

END OF SECTION 105220

SECTION 105240 – DATA AND KEY STORAGE CABINETS

PART 1 GENERAL

1.01 SUMMARY:

A. Section Includes: Data and key storage cabinet for fire / police rapid entry.

1.02 SUBMITTALS:

A. Submit the following in accordance with Section 01330:

1. Product Data and manufacturer's standard installation methods anddetails.
2. Shop drawings: Include methods of installation differing from manufacturer's standard details. Indicate dimensions, clearances, anddepth of recess.
3. UL 1037, UL 1610, UL 1332, UL 437
4. Compliant to National Fire Code (NFPA, IFC, IBC)

PART 2 PRODUCT

2.01 STORAGE CABINET:

A. Basis of Design is the "Knox Box", as manufactured by Knox Company 1601 W. Deer Valley Rd. Phoenix, AZ 85027 | T. 800-552-5669 | F. 623-687-2290 | info@knoxbox.com

B. Provide KnoxBox with hinged door, 1/4" plate steel housing, 1/2" thick steel door with interior gasket seal and stainless-steel door hinge. Box and lock UL Listed. Lock has 1/8" thick stainless steel dust cover with tamper seal mounting capability.

C. Model: 3200 Series Key Cabinet. Model #3271NC

D. Capacity: 10 keys.

E. UL Listed Knox Tamper Alert: Fire Alarm / Panel.

F. Exterior Dimensions:
1. Body - 4"H x 5"W x 3-7/8"D
2. Recessed Mount Flange - 7"H x 7"W.

G. RECESS MOUNTING KIT DIMENSIONS:
1. Rough-in Dimensions: 6-1/2"H x 6-1/2"W x 5"D

H. Lock: UL Listed. Double-action rotating tumblers and hardened steel pins accessed by a biased cut key.

I. ACCESSORIES: Provide Key Tags & Key Rings

J. Color: Black

PART 3 EXECUTION,

3.01 INSTALLATION:

A. Verify mounting location with local Fire Department & Police Department prior to installation.

B. Install in accordance with manufacturer's instruction.

C. Minimum mounting height: 6 feet above ground

D. Mount type: Recessed

1. The Recess Mounting Kit (RMK) includes shell housing and mounting hardware, which may only be used for recessed models to cast-in-place within new concrete or masonry construction. The KnoxBox is mounted into the shell housing after construction is completed.

END OF SECTION 105240

SECTION 114000 - FOOD SERVICE EQUIPMENT

PART 1 - GENERAL

1.01 GENERAL REQUIREMENTS

A. Work of this Section shall conform to the requirements of the Contract Documents including drawings and general provisions of the Contract, General and Supplementary Conditions and Division 01 Specification Sections.

1.02 BIDS

A. Unless otherwise noted, Kitchen Equipment Contractor (KEC) is a sub-contractor to the General Contractor (GC) and is to provide and install all items listed in this section and as detailed on food service drawings.

B. Any denotation to specific trade responsibility (ie: Kitchen Equipment Contractor (KEC), Electrical Contractor (EC), Plumbing Contractor (PC), etc.) mentioned shall fall under the scope of the General Contractor (GC). The GC is responsible to hire all necessary sub-contractors.

C. Raymond/ Raymond Associates is herein identified as the Food Service Consultant.

D. Bids must be based on equipment of manufacturers specified; no substitution will be accepted after award of Contract.

E. Substitutions: When a product or material is specified by name and or model number, as noted in these specifications, such specifications establishes the standard type and quality considered most satisfactory for the particular purpose in the building. The bid proposal therefore should be based thereon, so that all bidders bid under the same conditions. Another product or material of the same type that meets the requirements may be submitted for consideration as a substitute only under the following conditions:

1. Requests for substitution must be submitted in writing at least ten (10) days before the date set for the receipt of bids for review and approval by the design professional. If the substitution is found to be equivalent, all bidders will be notified prior to the receipt of bids.

2. In providing substitution requests, the bidder must prove equivalence of the substitution and furnish detailed specifications and catalog cuts or drawings. Failure to identify exceptions or deviations from equipment specified must be interpreted to indicate that the product offered complies with the specification in every respect.

F. Owner, Architect and Food Service Consultant reserves right to waive any informality, or reject any or all bids and any parts thereof, or to accept that bid as a whole or part that in his judgment is for the best interest of Owner. All bids to have on Contractor's letterhead itemized cost of each item of equipment, otherwise bid will be rejected.

G. Custom fabrication, millwork, equipment, etc. must be built by a company continually in business for at least a 5-year period.

H. Contract documents convey a method of construction for custom fabrication; however this may or may not be the appropriate method based on selected fabricators industry knowledge and standards. It will be the responsibility of the selected fabricator to interpret and apply appropriate methods of construction for full functionality of custom fabrication.

1.03 WORK INCLUDED

A. KEC shall coordinate with other trades or sub-contractors in order that whole installation may result in the highest grade possible.

B. KEC shall provide and install only such valves, traps, faucets, shut-offs, reducing pressure valves, relief valves and other specialty items required within equipment and as hereinafter specified.

C. KEC shall make all necessary cut-outs and knock-outs where required on equipment to accommodate electrical receptacles, switches or other electrical outlets and equipment, together with such cut-outs as required for passage of gas or plumbing piping, etc.

D. KEC shall stack and remove rubbish waste material, crating, etc., resulting from work and keep the premises clean at all times. Upon completion of the installation, thoroughly and finally clean all equipment ready for use.

1.04 POWER AVAILABLE

A. Electric Voltage: 120/208/480 volt, 60 cycle, 1 & 3 ph.

B. Water Pressure: Typical Food Service Equipment range 25 to 90 PSI, if required, pressure reducing valves provided by Plumbing Contractor.

C. Water Temperature(s):

1. 110°-120° Fahrenheit max at hand washing sinks, work sinks and preparation sinks.

2. 120°-140° Fahrenheit max at 3-compartment pot sink, dishwashers and hose reel assembly.

3. 110°-120° Fahrenheit max at cooking equipment with faucet assembly.

D. Gas Pressure: Typical Food Service Equipment range 5" W.C. to 10" W.C., if required, a gas pressure reducing valve at main feed, prior to equipment connection, to be provided by Plumbing Contractor.

1.05 GENERAL CHARACTERISTICS OF EQUIPMENT

A. Electrically Operated

1. Electrically operated equipment to be listed by Underwriters Labs., Inc.

2. Motors: Up to and including 3/4 horsepower, shall be 120/60/1.

3. Motors: Over 3/4 horsepower, 208/60/3, unless otherwise indicated.

4. Ranges, food warmers, etc., over 2.0 kW, 208/60/1 or 208/60/3, unless otherwise indicated.

5. Electrically heated equipment, etc., 2.0 kW and under, 120/60/1.

6. 1 ph. electrical plug-in units with 3 wire cords; 3 wire cap.

7. 3 ph. electrical plug-in units with 4 wire cords; 4 wire cap.

8. Motor driven equipment: equipped with starting switch.

9. Motors: equipped with overload protection.

10. Wiring on fixtures, including operating switches and pilots, furnished by Kitchen Equipment Contractor.

B. Submit in writing to Architect and Food Service Consultant for approval, schedule showing proposed electrical characteristics of each piece of equipment and disconnect means provided.

C. Punch holes for, and install hood and walk-in cooler/freezer lights and concealed conduits. The interconnection of same, including control switch, wiring, inter-wiring between sections, etc., by Electrical Contractor.

1.06 WORK EXCLUDED FROM THIS DIVISION

A. The following work is to be performed by other trades or sub-contractors and is not the responsibility of the Kitchen Equipment Contractor. The GC is responsible to hire all necessary sub-contractors.

1. Electrical Contractor

a. Make connections to all food service equipment as shown.

b. Furnish disconnect switches.

c. Interconnecting of all exhaust hood lights, switches, control packages, interfaces, etc. including inter-wiring between sections of exhaust hoods.

d. Interconnecting of control switches as required on equipment shown, and all other components which come as part of any equipment shown on plan.

e. Interconnecting of any equipment, including, but not limited to, walk-in coolers/ freezers monitoring, exhaust hood monitoring and/ or fire protection monitoring with building management systems.

f. Review all manufacturer approved installation methods/ diagrams and comply for proper installation of equipment being furnished.

2. Plumbing Contractor

a. Make hot and cold water, waste and gas connections to all kitchen equipment shown, furnishing all necessary shut-offs, traps, backflow preventers, vacuum breakers, grease traps, drain line runs, etc.

b. Install all faucets, pot fillers, filters and pressure regulators as furnished by Kitchen Equipment Contractor.

c. Interconnecting of any and all other components that come as part of any other equipment shown.

d. Provide floor drains and floor sinks where shown and indirect piping to floor drains and floor sinks as indicated on drawings.

e. Review all manufacturer approved installation methods/ diagrams and comply for proper installation of equipment being furnished.

3. Ventilation Contractor

a. Furnish size, shape and location of vent collars for exhaust hood and make connections to these collars.

4. General Contractor

a. Provide and/or coordinate all work to the floors, walls and ceilings of the space.

b. Provide wall blocking where required and as indicated on food service drawings.

1.07 SUB-CONTRACTORS TO KITCHEN EQUIPMENT CONTRACTOR

A. Fire Protection Contractor for the wet chemical protection system within exhaust hood systems only and Refrigeration Contractor for the remote refrigeration packages for walk-in coolers/ freezers, rack systems, etc. are typical sub-contractors to the Kitchen Equipment Contractor.

B. KEC to provide the name and addresses of all sub-contractors furnished to Architect/Owner and Food Service Consultant at time of submitting shop drawings. Selection of sub-contractors must be approved by them; and if in their

judgment any fail to prosecute work in strict accordance with drawings and contract, after due notice from Owner or his agent, shall discharge same, but this in no way releases Kitchen Equipment Contractor from his obligations and responsibility under the contract.

C. Every sub-contractor bound by terms and provisions of the contract so far as applicable to his work. Nothing contained herein shall create any contractual relations between any sub-contractor and Owner.

D. Kitchen Equipment Contractor fully responsible to Owner for acts and omissions of his/ her sub-contractors.

1.08 SHOP DRAWINGS, ETC.

A. Immediately upon award of Contract and within 4 weeks, submit to Architect/Owner and Food Service Consultant, drawings for approval. Submit 1/4" scale rough-in drawings showing locations of plumbing and electrical connections with all requirements indicated at point of connection; use of a legend or numbered connection plan will be cause for drawing rejection. Prior to fabrication, submit to Architect for approval 1/2" scale shop drawings showing plan, elevations and isometric views covering all items of work. Drawings to show dimensions and details of construction, installation and relations to adjoining and related work where same requires cutting or close fitting. Show reinforcement, anchorage, etc., required for complete installation. After correction and approval of above, submit sets for record, then afterwards as many additional copies as required by client.

B. Submit in same manner as above, drawings showing masonry bases, depressed floors, positions of walls, requirements for ceiling hangers, wall blocking, and any other special conditions necessary for complete and correct correlation of various trades for satisfactory installation of all equipment shown on drawings.

C. Manufacturer's names, cuts, descriptive data, analysis of tests, rated capacities and other information necessary for approval of standard manufactured articles and equipment furnished to Architect/Owner and Food Service Consultant for approval before ordering or purchasing. This submission made in same manner as above. All cuts marked with item number, mechanical characteristics, accessories furnished and bound in folders.

1.09 GENERAL

A. No machine or equipment acceptable from any manufacturer not having had equipment of approximately the same type and design as that specified operating successfully for at least 5 years. Machines installed for test purposes shall not come within the category of successful commercial operation.

B. Architect/Owner and/or Food Service Consultant privileged to inspect material and fabrication at Kitchen Equipment Contractor's or its sub-contractor's factory at any time.

C. Before proceeding with shop work, Kitchen Equipment Contractor to verify all measurements at premises. Where required dimensions are not immediately

obtainable and delay in waiting for these dimensions would cause work to be seriously delayed, the matter shall be referred to Architect for a decision. In obtaining measurements, Kitchen Equipment Contractor shall consider work requirements of other trades and equipment designed and fabricated to provide necessary clearance for surrounding and adjoining work.

D. Kitchen Equipment Contractor responsible for making any and all necessary adjustments to complete his work in a workmanlike manner, as approved by Architect/Owner.

E. Dimensions as indicated on drawings and specifications are approximate, and are to be adjusted if and where necessary to suit job conditions and field measurements.

F. Tops of tables, shelves, tops and exterior panels of cabinets, counters, doors, drainboards, etc., to be constructed of a single sheet of metal. Where size of equipment requires more than 1 sheet of metal, sheets butt joined with joints continuously welded full length. No joints less than 18" from an edge or end of a piece of equipment. In addition, all joints shall have battens or stiffeners welded to jointed material, ground smooth and polished.

G. Appliances of rigid construction free from objectionable vibration and quiet in operation.

H. Electrical heating elements shall conform to latest standards of National Electrical Manufacturer's Association and Underwriters Labs., Inc., where applicable standards have been set up by such agencies.

I. Motors of ample power to operate machines for which designated under full load operating conditions without exceeding nameplate ratings. Horsepower requirements on driven equipment determined by manufacturer, based on normal operation of maximum capacity.

J. Motors drip-proof, splash-proof or totally enclosed type, having two-hour duty cycle and ball bearings (except small timing motors which may have sleeve bearings). All motors shall have windings impregnated to resist moisture. Motors located where adjacent to deposits of dust, lint, etc., totally enclosed type.

K. It is the responsibility of the Kitchen Equipment Contractor to supply and mount all electrical outlets, switches, controls, etc. within table/counter back splashes, aprons, panels, etc. and to provide stainless steel cover plates as required. Furthermore, it is the responsibility of the Electrical Contractor, in coordination with the Kitchen Equipment Contractor, to make final interconnections within table/counter interior to junction boxes, outlets, switches, controls, etc. for equipment indicated.

1.10 STAINLESS STEEL (S.S.)

A. Where S.S. is specified, it shall be Type 304, nickel bearing iron alloy, containing approximately 17.0% to 19% chromium, 8% to 10% nickel, not more than 0.2% carbon, and not more than 2.0% of other alloying elements; designed being austenitic (non-magnetic).

B. S.S. free from scale with all surfaces polished to a high commercial finish. All welding and exposed welds hereinafter specified, must be ground down and polished smooth to a #4 finish so that no evidence of welding will appear. Unexposed welds on underside of counter or tables ground smooth and treated with an acid solution to remove weld discoloration and oxidization and to arrest corrosion.

C. Undersides of all counters, work tables, sinks, drain boards, etc., after fabrication, to have one (1) heavy coat of sound deadening material applied as allowed by local codes.

D. Gauges for sheet iron and sheet metal, U.S. Standard.

E. Rivets, welds, bolts, screws, nuts and washers to be steel except where brass or S.S. is fastened, in which case they shall be brass or S.S., respectively. Where dissimilar metals are fastened, welds, bolts, rivets, screws, nuts and washers, highest grade metal. Spacing and extent of welds, rivets, bolts and screws such as to insure suitable fastening and prevent bulging of metals fastened.

1.11 SANITATION

A. All custom-built equipment constructed in accordance with standard No. 2, 4 & 7 of National Sanitation Foundation Testing Laboratory, manufactured by a company approved by N.S.F. and carry their stamp of approval. Kitchen Equipment Contractor must have "Registered" numbered seal of N.S.F. approval.

1.12 OPERATING INSTRUCTIONS

A. Kitchen Equipment Contractor shall leave all items of equipment in good, operating condition and furnish the services of a "qualified" competent manufacturer's representative to instruct Owner's employees in proper use and care of equipment. Representative on call for as long a period as is necessary to assure Owner that such instruction is thoroughly understood.

B. Kitchen Equipment Contractor shall be responsible for scheduling of equipment demonstrations and/or training and shall provide a detailed list of expected dates, times and manufacturer’s representative to be present (in attendance) for each piece of equipment.

C. Kitchen Equipment Contractor or his qualified manufacturer's representative, thereafter, shall make all necessary calls during warranty period.

1.13 SAMPLES

A. After Award of Contract, when requested, Kitchen Equipment Contractor shall supply Architect with samples of fabricated equipment, such as corner of table with a rolled or inverted "V" edge, corner of dish table, over shelf, drawer assembly, table leg with foot and gusset, or as specifically requested.

1.14 GUARANTEE

A. Kitchen Equipment Contractor shall guarantee, as part of the bid and/or contract, workmanship, material and equipment for a period of 1 year from date of equipment final install and project turnover to Owner, and shall remedy any defect due to faulty workmanship or materials which may appear within guarantee period.

B. Manufacturer's operation and maintenance manuals on equipment, etc., turned over to the Owner in duplicate, bound in a folder and marked accordingly.

1.15 EQUIPMENT CONSTRUCTION AND STANDARDS

A. Where initials S.S. are used, they refer to "stainless steel;" C.P. refers to "chrome plated;" N.I.C. refers to "not in contract;" G.I. refers to "galvanized iron;" F.D. refers to "floor drain", and F.S. refers to "floor sink."

1.16 WASTES AND OVERFLOWS

A. Sinks to have the following waste and overflow assemblies:

1. For 1-1/2" NPT: Fisher model 74043 or approved alternate. Lever handle waste outlet with overflow assembly, 3-1/2" sink opening, self-centering stainless steel face flange with flat strainer, 12 gpm max flow rate, stainless steel lever handle with ball, overflow head with stainless steel faceplate and chrome plated cast red brass drain body.

2. For 2" NPT: Fisher model 74043 or approved alternate. Lever handle waste outlet with overflow assembly, 3-1/2" sink opening, self-centering stainless steel face flange with flat strainer, 12 gpm max flow rate, stainless steel lever handle with ball, overflow head with stainless steel faceplate and chrome plated cast red brass drain body.

1.17 WATER INLET LOCATION

A. Located in all cases above the positive water level to prevent siphoning of liquid into water system. Wherever conditions require water inlet below such level, a suitable type of vacuum breaker shall be placed on fixture and form part of same to prevent such siphoning.

B. All faucets furnished by Kitchen Equipment Contractor as specified. Traps furnished by Plumbing Contractor.

1.18 PITCH AND DRAINAGE

A. Wherever a fixture is used with waste or drain outlet, surface shall have distinct pitch towards outlet. Drainboards and tables that contain or adjoin sinks shall have a definite pitch towards sinks. Where necessary, surfaces creased and grooved to give a definite pitch.

1.19 SINKS

A. #14-gauge S.S. interior corners rounded to 1" radius horizontally and vertically, forming a cove in bottom. All joints butt edged. Sink sizes given, inside measurements.

B. Bottom of each compartment creased to center and fitted with a rotary drain as described in section 1.16, hereinbefore specified. Waste lever not to protrude beyond body of sink. Sinks to have overflows installed by Kitchen Equipment Contractor.

C. Overflow to consist of 1-1/2" chrome plated brass strainer plate, fitted in back of each compartment at proper level directly connected to waste outlet with 1-1/2" chrome plated brass pipe.

D. Back of sink extended integrally approximately 12" above working level, back 2-1/4" on 45° angle towards rear and then flanged down 1" and punched to accommodate faucets.

E. Front and both ends, unless otherwise specified and shown, finished on top edge, 3" above working level, with 1-1/2" diameter, 180° welded integral roll. Exterior corners rounded to a 2-1/2" radius, all integrally welded.

F. Sinks and drainboards finished on front and back edges only and left with straight edge on ends, so that drainboards may be welded thereto, forming integral units with top edge of rolled rim curbing formed on one horizontal plane across front to unit though surfaces of drainboards pitched to sinks.

G. Multiple compartment sinks divided with double wall #14-gauge S.S. partitions, all corners rounded same as corners in sinks, continuously welded in place.

H. Back, bottom and front of one continuous piece with no overlapping joints or open spaces between compartments.

1.20 SINK BOWL BUILT INTO TABLE TOP

A. Sink constructed integral with table top #14-gauge S.S. having all interior corners coved vertically and horizontally forming a cove in bottom. To have overflow, lever waste outlet, etc…., as hereinbefore specified for sinks in spec section 1.19.

B. All joints butt edged and welded, ground and polished, so that no evidence of welding will appear. All sink sizes inside measurements. Table top where shown, punched to receive deck type combination faucets, provided by Kitchen Equipment Contractor.

1.21 FAUCET AND BASKET DRAIN ASSEMBLY

A. Sinks to have the following faucet assemblies:

1. 3-Compartment Sink, Potwash:

a. 1 ea. Fisher model 74306 or approved alternate. Pre-Rinse assembly with 1.3 gpm flow rate or less, splash/ wall mount, 8" centers, add-on faucet 12" stainless steel tubular swing spout with

4" wrist blade handles, 36" flexible gooseneck hose with spray head, stainless steel spring with wall bracket, compression valves, 1/2" NPT female inlets, ADA compliant, NO LEAD and NSF approved. Deck mount assembly model 75485.

b. 1 ea. Fisher model 60798 or approved alternate. Faucet with 2.2 gpm flow rate or less, splash/ wall mount with 4" wrist blade handles, 8" centers, 12" stainless steel tubular swing spout, compression valves, 1/2" NPT female inlets, ADA compliant, NO LEAD and NSF approved. Deck mount assembly model 57665.

2. 2-Compartment Sink, Preparation:

a. 1 ea. Fisher model 57665 or approved alternate. Faucet with 2.2 gpm flow rate or less, deck mount with 4" wrist blade handles, 8" centers, 12" stainless steel tubular swing spout, compression valves, 1/2" NPT female inlets, ADA compliant, NO LEAD and NSF approved. Splash/ wall mount assembly model 60798.

3. Work Sink (Built-in, Welded-In):

a. 1 ea. Fisher model 57665 or approved alternate. Faucet with 2.2 gpm flow rate or less, deck mount with 4" wrist blade handles, 8" centers, 12" stainless steel tubular swing spout, compression valves, 1/2" NPT female inlets, ADA compliant, NO LEAD and NSF approved. Splash/ wall mount assembly model 60798.

4. Hand Sink:

a. 1 ea. Fisher model 58696 or approved alternate. Faucet with 2.2 gpm flow rate or less, deck mount with 4" wrist blade handles, 4" centers, 6" stainless steel swivel gooseneck spout, compression valves, 1/2" NPT female inlets, ADA compliant, NO LEAD and NSF approved. Splash/ wall mount assembly model 62650.

B. All plumbing fixtures shall be certified CSA, ASME A112.18.1/CSA B125.1, AB1953/HSC 116875, Vermont Bill S152, NSF/ANSI 61 sec 9, annex F and G, NSF/ANSI 372 low lead content, ASTM F2324.

1.22 DRAINBOARDS

A. #14 gauge S.S. full width of sink carried up approximately 12" at back and where adjacent to wall and finished same as heretofore described for back of sink, and having 3" high curbing at front and ends not adjacent to walls and finished with integral 1-1/2" diameter 180° roll, unless otherwise specified.

B. Drainboards continuously welded to sinks.

C. Drainboards 30" long or less shall have 1-1/2" #16-gauge S.S. tubular braces secured at underside near front and welded to S.S. gusset at leg anchor. All others to have legs and cross bracing with full length and width undershelf as specified for tables.

1.23 TABLES WITH S.S. TOPS

A. Tops of #14-gauge S.S. 1 piece construction with all edges turned down into 2" integral 180° roll with all corners rounded to 2" radius forming a bullnosed corner. Corner welded and polished smooth.

B. Table tops thoroughly cross braced with 4" x 1" S.S. channel stiffeners #14 gauge welded to underside. All cross braces spaced not over 24" on center.

C. Table tops adjoining walls or adjacent equipment carried up approximately 6" and returned 1", down 1" at top and ends. Intersections of table top and raised edge coved to 1" radius. Where backsplash is exposed, it shall have finished S.S. back.

D. It is the responsibility of the K.E.C. to supply and mount all electrical outlets, switches, controls, etc. within table/counter back splashes, aprons, panels, etc. and to provide S.S. cover plates as required. Furthermore, it is the responsibility of the Electrical Contractor, in coordination with the Kitchen Equipment Contractor, to make final interconnections within table/counter interior to junction boxes, outlets, switches, controls, etc. for equipment indicated, if required.

1.24 LEGS AND CROSSRAILS

A. 1-5/8" O.D. #14-gauge S.S. tubular-type with S.S. bullet shaped feet having minimum vertical adjustment of 1-1/2" without showing threading or adjusting bolts. Feet fully enclosed on bottom. Adjustment of feet by means of a threaded shank attached to foot and screwed into a properly secured threaded member inside of leg. Construction of leg such that it shall fit over shank of foot so no liquid or other material can work their way into legs or foot.

B. Tops of legs attached to enclosed conical gussets of heavy gauge S.S. Gussets welded to #14-gauge S.S. 4" x 1" channels to underside on which they appear. Crossrails 1-1/2" O.D. #14-gauge S.S. coped and welded to legs approximately 10" A.F.F. or as specified.

1.25 NOT USED

1.26 NOT USED

1.27 UNDERSHELVES

A. #16-gauge polished S.S. full length and width of table with all edges turned down into 2" wide channel. In way of table legs, shelf notched to fit contour of legs and fitted to same in neat, workmanlike manner to eliminate unsanitary crevices, fully welded, ground and polished.

B. Undershelves reinforced on underside with welded 4" x 1" longitudinal channels of #14-gauge S.S. where applicable. All signs of welding on shelf surface removed.

1.28 DRAWERS

A. Of #18 gauge S.S. all interior corners coved to a 1" radius both vertically and horizontally. All welds ground and polished to a uniform finish.

B. Front of #14 gauge polished S.S. and will extend on both sides of drawer body to conceal slides, corners welded, ground and polished. Space between drawer front and body fully enclosed at bottom, back and both sides by means of a #20 gauge S.S. filler, spot welded to drawer front and body, to provide a fully sealed, vermin-proof enclosure. Drawer front provided with a 5" C.H.G. # P46-1010 S.S. pull handle fastened in place by means of a concealed screws.

C. Drawer slides of #14 gauge S.S. fitted with 4 case hardened ball bearing rollers. Track attached to drawer is to have upper edge channel shaped to fit contour of roller rim to provide a positive drawer guide and prevent jarring. This drawer track firmly spot-welded to body. Outer track provided with auto stops to lock without the use of tools.

D. Where specified, drawer provided with removable synthetic carving board. Carving board is to slide into enclosure under drawer made of #14 gauge S.S. and extending across underside of carving board, with both sides turned up and welded to slide assembly. The 2 sides provided with #14 gauge S.S. angles with stops at rear fastened in place 1/8" above top surface of carving board to provide guide and storage compartment when carving board is not in use. Carving board is to measure approximately 21" x 21" x 1" thick.

E. Tool drawer 20" x 20" x 5" deep, bread drawer 20" x 20" x 10" deep. All drawers to have 4 pin paracentric keyed-alike built-in locks same as sliding and hinged doors. C.P. where exposed.

1.29 NOT USED

1.30 NOT USED

1.31 NOT USED

1.32 NOT USED

1.33 NOT USED

1.34 NOT USED

1.35 NOT USED

1.36 NOT USED

1.37 NOT USED

1.38 NOT USED

1.39 NOT USED

1.40 NOT USED

1.41 NOT USED

1.42 NOT USED

1.43 NOT USED

1.44 NOT USED

1.45 NOT USED

1.46 NOT USED

1.47 NOT USED

1.48 NOT USED

1.49 NOTUSED

1.50 REFRIGERATORS AND REFRIGERATION UNITS

A. Reach-in refrigerators, freezers, and refrigerated units, as shown unless otherwise specified, furnished by Kitchen Equipment Contractor They shall meet all requirements as set forth for individual item number and complete with self-contained or remote compressors and motors. Cooling coils blower type, unless otherwise called for, provided with initial charge of approved CFC free refrigerant. Plumbing Contractor responsible for extending refrigerator drain line, where required, to spill into adjacent floor drain in approved manner. Extended drain line not less than 3/4" I.D. and C.P. or S.S. tubing.

B. All refrigerated equipment, refrigerators and freezers, whether walk-in or reach-in, started and adjusted to maintain required temperatures, charged with approved refrigerant as required.

C. All reach-in refrigerators, freezers, hot food warmers, etc., to have keyed-alike locks. Kitchen Equipment Contractor must request this at time of placing order to avoid correction at a later date at Kitchen Equipment Contractor's expense.

D. Kitchen Equipment Contractor to provide 1 year's free service for all types of refrigerators and refrigeration equipment. Service to include all compressors, unit coolers, controls, etc., to include adjustments and repairs, irrespective of cause, whether mechanical, operational or manufacturing at no additional cost to Owner. Additionally, five (5) year warranty provided on all compressors, parts only or replacement.

1.51 NOT USED

1.52 NOT USED

PART 2 – PRODUCTS

ITEM #1 ICE MAKER W/ BIN – QTY. AS PER PLAN & SCHEDULE

Manitowoc Model IDT0450A-161/ D-400. Unit to be installed where shown on drawings. Provided with all features, options and accessories, per quantity required, as indicated:

- Electrical: 120/1, Hardwired
- Ice Production: 470 lbs. per 24 hours (approximately)
- Bin Capacity: 400 lbs.
- 1 ea. Stainless steel ice scoop
- 1 ea. Wall mounted water filter with replacement cartridges
- Stainless steel legs, 6" adjustable

Or as manufactured by Scotsman or Hoshizaki.

ITEM #2 REFRIGERATOR, REACH-IN – QTY. AS PER PLAN & SCHEDULE

Beverage Air Model HRPS1HC-1HS. Unit to be installed where shown on drawings. Provided with all features, options and accessories, per quantity required, as indicated:

- Electrical: 120/1, NEMA 5-15P
- Verify door hinging
- Exterior Finish: Stainless Steel
- Interior Finish: Stainless Steel
- 1 ea. Self-contained refrigeration
- 2 ea. Half solid doors with locks
- 3 ea. Stainless steel shelves per compartment, top section
- 1 ea. Digital temperature control system
- 1 ea. Three year parts warranty
- 1 ea. Three year labor warranty
- 1 ea. Energy Star® Certified
- Adjustable universal pan slides 1-1/2" O.C. to hold 18" x 26" or 12" x 20" pans, bottom section
- Mounted on heavy duty casters, front two with brakes

Or as manufactured by True Mfg. or Continental Refrigerator.

ITEM #3 REFRIGERATOR, REACH-IN – QTY. AS PER PLAN & SCHEDULE

Beverage Air Model HRPS2HC-1HS. Unit to be installed where shown on drawings. Provided with all features, options and accessories, per quantity required, as indicated:

- Electrical: 120/1, NEMA 5-15P
- Verify door hinging
- Exterior Finish: Stainless Steel
- Interior Finish: Stainless Steel
- 1 ea. Self-contained refrigeration
- 4 ea. Half solid doors with locks

- 3 ea. Stainless steel shelves per compartment, top section
- 1 ea. Digital temperature control system
- 1 ea. Three year parts warranty
- 1 ea. Three year labor warranty
- 1 ea. Energy Star® Certified
- Adjustable universal pan slides 1-1/2" O.C. to hold 18" x 26" or 12" x 20" pans, bottom section
- Mounted on heavy duty casters, front two with brakes

Or as manufactured by True Mfg. or Continental Refrigerator.

ITEM #4 WORK TABLE, PORTABLE – QTY. AS PER PLAN & SCHEDULE

IMC/ Teddy Model WT-3060. Size, shape and installed where shown on drawing. This is a fabricated item and is to be constructed as described in General Specifications and as further detailed on contract drawings. Provided with all features, options and accessories, per quantity required, as indicated:

- Counter Top Material: Stainless Steel, 14 Gauge
- 1 ea. Work drawer assembly with removable cutting board
- Stainless steel undershelf, removable
- Mounted on heavy duty casters, front two with brakes

Or as manufactured by Aero Mfg. or Eagle Group/Metal Masters.

ITEM #5 HAND SINK, WALL MOUNT – QTY. AS PER PLAN & SCHEDULE

IMC/ Teddy Model WS-1D. Unit to be installed where shown on drawings. Provided with all features, options and accessories, per quantity required, as indicated:

- 1 ea. Manual faucet, gooseneck
- 1 ea. Soap dispenser, deck mounted
- 1 ea. Towel dispenser, integral C-fold
- 1 ea. Left and right splash guards
- 1 ea. Emergency Eye Wash Unit
- Wall backing by General Contractor

Or as manufactured by Aero Mfg. or Eagle Group/Metal Masters.

ITEM #6 3-COMPARTMENT SINK, POTWASH – QTY. AS PER PLAN & SCHEDULE

IMC/ Teddy Model SCS-34-2020-20RL. Size, shape and installed where shown on drawing. This is a fabricated item and is to be constructed as described in General Specifications and as further detailed on contract drawings. Provided with all features, options and accessories, per quantity required, as indicated:

- Counter Top Material: Stainless Steel, 14 Gauge
- 3 ea. Built-in work sinks, 20" L x 20" W x 14" D
- 3 ea. Waste valve with lever
- 3 ea. Tail piece
- 3 ea. Waste overflow

- 1 ea. Stainless steel pre-rinse assembly with 12" swing spout add-on faucet and wrist action handles, 1/2" connections
- 1 ea. Stainless steel faucet with 12" swing spout and wrist action handles, 1/2" connections
- 1 ea. Stainless steel common bowl skirt
- Flanged feet bolted to floor

Or as manufactured by Aero Mfg. or Eagle Group/Metal Masters.

ITEM #7 SHELF, WALL MOUNT – QTY. AS PER PLAN & SCHEDULE

Eagle Group/Metal Masters Model GWB1448VG. Unit to be installed where shown on drawings. Provided with all features, options and accessories, per quantity required, as indicated:

- 1 ea. Wire shelf, epoxy coated
- 2 ea. Stationary wall mount brackets
- 2 ea. Dividers
- Wall backing by General Contractor

Or as manufactured by Metro or Focus.

ITEM #8 SPARE NUMBER

ITEM #9 SPARE NUMBER

ITEM #10 UNDERBAR, 3-COMPARTMENT SINK – QTY. AS PER PLAN & SCHEDULE

Krowne Model KR19-53C. Unit to be installed where shown on drawings. Provided with all features, options and accessories, per quantity required, as indicated:

- Counter Top Material: Stainless Steel, 14 Gauge
- 3 ea. Built-in work sinks, 10" L x 10" W x 14" D
- 3 ea. Waste valve with lever
- 3 ea. Tail piece
- 3 ea. Waste overflow
- 1 ea. Stainless steel faucet with 12" swing spout and wrist action handles, 1/2" connections

Or as manufactured by BK Resources or John Boos.

ITEM #11 TRASH RECEPTACLE, SLIM JIM – QTY. AS PER PLAN & SCHEDULE

Rubbermaid Model 1971258. Unit to be installed where shown on drawings. Provided with all features, options and accessories, per quantity required, as indicated:

- 1 ea. 16 Gallon capacity
- 1 ea. Portable dolly
- 1 ea. Tuffmode Polyliner Bags

No alternate manufacturers will be accepted for this item.

ITEM #12 UNDERBAR FILLERS & DRAINBOARDS – QTY. AS PER PLAN & SCHEDULE

Krowne Model KR24-C18L. Unit to be installed where shown on drawings. Provided with all features, options and accessories, per quantity required, as indicated:

- No additional features, options or accessories required

Or as manufactured by BK Resources or John Boos.

ITEM #13 UNDERBAR, ALL-IN-ONE STATION – QTY. AS PER PLAN & SCHEDULE

Krowne Model KR24-MX68A. Unit to be installed where shown on drawings. Provided with all features, options and accessories, per quantity required, as indicated:

- 1 ea. Integral hand sink
- 1 ea. Removable garnish station with integrated cover & pint cups
- 1 ea. Insulated elixir section with stainless steel dividers & perforated bottom for ice separation
- 1 ea. Ice bin with cold plate, 115 lb. capacity
- 2 ea. Ice bin dividers
- 1 ea. 5-Tier Liquor display
- 1 ea. 42" Sound deadened single speedrail
- 1 ea. Tool well with dipperwell faucet
- 1 ea. High performance speed rinser
- 1 ea. Non-slip flush mounted cutting board
- 1 ea. Garnish tray/ sliding cover
- 1-5/8" Tubular legs with grey plastic bullet foot

Or as manufactured by BK Resources or John Boos.

ITEM #14 BACK BAR COOLER – QTY. AS PER PLAN & SCHEDULE

Glastender Model C1FL32. Unit to be installed where shown on drawings. Provided with all features, options and accessories, per quantity required, as indicated:

- Electrical: 120/1, NEMA 5-15P
- Exterior Finish: Stainless Steel
- Interior Finish: Stainless Steel
- Verify door hinging
- 1 ea. Self-contained refrigeration
- 1 ea. Door, locking
- 1 ea. Adjustable shelves
- 1 ea. LED interior lighting
- 1 ea. Set of low-profile roller casters

Or as manufactured by Krowne or Perlick.

ITEM #15 UNDERBAR, ALL-IN-ONE STATION – QTY. AS PER PLAN & SCHEDULE

Krowne Model KR24-MX68A. Unit to be installed where shown on drawings. Provided with all features, options and accessories, per quantity required, as indicated:

- 1 ea. Sink bowl, 10"W x 12"L x 7"D
- 1 ea. Removable garnish station with integrated cover & pint cups
- 1 ea. Insulated elixir section with stainless steel dividers & perforated bottom for ice separation
- 1 ea. Ice bin with cold plate, 115 lb. capacity
- 2 ea. Ice bin dividers
- 1 ea. 5-Tier Liquor display
- 1 ea. Dump sink, 14" with glass rinser and tool caddy
- 1 ea. 42" Sound deadened single speedrail
- 1 ea. Tool well with dipperwell faucet
- 1 ea. High performance speed rinser
- 1 ea. Non-slip flush mounted cutting board
- 1 ea. Garnish tray/ sliding cover
- 1-5/8" Tubular legs with grey plastic bullet foot

Or as manufactured by BK Resources or John Boos.

ITEM #16 UNDERBAR FILLERS & DRAINBOARDS – QTY. AS PER PLAN & SCHEDULE

Krowne Model KR24-C18R. Unit to be installed where shown on drawings. Provided with all features, options and accessories, per quantity required, as indicated:

- No additional features, options or accessories required

Or as manufactured by BK Resources or John Boos.

ITEM #17 SPARE NUMBER

ITEM #18 BACK BAR COOLER – QTY. AS PER PLAN & SCHEDULE

Krowne Model BS84. Unit to be installed where shown on drawings. Provided with all features, options and accessories, per quantity required, as indicated:

- Electrical: 120/1, NEMA 5-15P
- Exterior Finish: Stainless Steel
- Interior Finish: Stainless Steel
- 1 ea. Self-contained refrigeration
- 1 ea. Interior lights, LED
- 3 ea. Full solid doors
- 1 ea. Automatic defrost
- 1 ea. Condensate evaporator
- 1 ea. Set of low-profile roller casters

Or as manufactured by Perlick or Glastender.

PART 3 - EXECUTION

3.01 GENERAL RELATED CONDITIONS

A. In each item of equipment hereinafter specified under the "Equipment Schedule," these specifications shall only identify each respective item by name and model number, as well as list various component parts/ accessories provided for same.

B. Therefore, it shall be intended that these respective items and their component parts shall be of material (mounted where applicable) constructed and furnished in strict accordance to that described in the general specifications for these items and integrally constructed where applicable.

C. It shall also be intended that where buy-out (pre-fabricated) items are specified, same shall be definitely furnished with all the accessories as normally furnished by manufacturer for these items. Also in strict accordance with current manufacturer's engineering data sheet for each respective item.

D. Should no list or description be provided for various component parts/ accessories, the Kitchen Equipment Contractor is responsible to provide required components for full and proper operation of said equipment.

3.02 EXAMINATION OF PLANS AND SPECIFICATIONS

A. Prospective bidders for this work must examine these plans and specifications carefully before bidding, and must request from Architect and/or Food Service Consultant in writing for an interpretation or correction of every apparent ambiguity, inconsistency or error therein. If necessary, such interpretation or correction shall be issued in writing as an addendum.

3.03 SPECIAL NOTES

A. It shall be the responsibility of Kitchen Equipment Contractor to make as many visits to the job site as is necessary and to keep up to date with progress made in field on the installation of all necessary rough-in to adequately and properly operate and accommodate all equipment furnished by said Contractor and as shown on drawings. Include this service in bid.

B. Kitchen Equipment Contractor to cooperate with all trades so that the end results of his/her work will be a satisfactory, approved and accepted installation. Written reports of each visit shall be sent promptly to the Architect and/or Food Service Consultant.

3.04 COORDINATION

A. Procedure of construction is of paramount importance in executions of this project. Kitchen Equipment Contractor to carry on his/her work so that no delay in his/her operations or those of any other contractors occurs at any time.

B. Kitchen Equipment Contractor to verify with Architect and/or Food Service Consultant as to opening date of the food service area(s), and schedule his/her fabrication and purchasing of equipment so that all will be in readiness, installed,

connected, tested, demonstrated, etc., in ample time prior to the scheduled opening date.

3.05 DELIVERY AND INSTALLATION

A. Shall mean and intend that Kitchen Equipment Contractor shall deliver and assemble all equipment of contract in 1 piece in required locations in building, ready for water, waste, gas, electric and ventilating connections required by other trades.

B. Any pieces of equipment may be delivered sectionally, but all working surfaces butt-welded, ground and polished on premises so that upon completion, such item of equipment will have true, smooth, even and continuous surfaces. Butt joining and filling with solder not permitted.

C. Kitchen Equipment Contractor must verify door sizes, delivery platform, elevator size, etc., effecting delivery to food service area(s) for all items of equipment.

3.06 RESERVATIONS AND CONDITIONS

A. It is the intent of this specification to complete the installation of all equipment covered herein in all phases ready for operation. Contractor shall carefully examine the plans and specifications for building construction contracts and determine therefrom the extent of his operations in all respects. All labor and materials not included in building construction contracts necessary to accomplish this intent are hereby included in this contract.

B. Kitchen Equipment Contractor shall attend job meetings when required for purpose of coordinating his/her work with other trades.

C. All equipment shall be received at the building fully protected. It will be the responsibility of the Kitchen Equipment Contractor to protect the equipment until completely installed and accepted.

3.07 EXISTING EQUIPMENT (RELOCATED AND/OR REINSTALLED)

A. Prior to submission of bid for equipment listed in Schedule of Equipment, Kitchen Equipment Contractor shall visit the existing facilities and associated areas to survey all existing equipment intended to be reused (or not used) to determine the extent of his/her work.

B. Kitchen Equipment Contractor responsible for verifying all reusable equipment's sizing, utility and mechanical requirements, prior to release of any custom fabrication or equipment associated with it. Additionally, all makes, models, etc…of said equipment to be verified by the Kitchen Equipment Contractor.

C. Bid shall include the cost of dismantling and moving, all reusable equipment to a temporary storage location designated by the Owner. In the event that the Owner cannot provide temporary storage, the Kitchen Equipment Contractor shall move all reusable existing equipment to his/her storage facility. When the facility is ready to receive equipment, the Kitchen Equipment Contractor shall

deliver and set in place all new equipment, as well as all reusable existing equipment.

D. Kitchen Equipment Contractor shall submit separate price for the removal from the premises all old, not reused kitchen equipment as identified by Owner and/or contract documents. Disposal of all such equipment shall be at the discretion of Kitchen Equipment Contractor, but shall be removed from the premises immediately when available. If price is not acceptable, the equipment shall remain the property of Owner.

E. When new areas are completed, Kitchen Equipment Contractor shall locate all new and reusable existing equipment in their respective locations, assemble and set in place, as shown on drawings, left ready for necessary final connections by respective trades. Conditions listed in the specifications under "Delivery and Installation" shall apply to all reusable existing equipment.

F. Rough-in drawings and all other necessary drawings and information covering the proper installation of all reusable existing equipment shall be submitted by Kitchen Equipment Contractor.

G. All necessary plumbing, electrical, mechanical, etc…disconnections associated with reusable equipment shall be completed by the respective trades.

END OF SECTION - 114000

01/04/2023

DESIGNS

Project:
Cateret Pavilion
Equipment Cut Data

From:
Raymond/ Raymond Associates
Brett Farrell
44 St. John Street
Goshen, NY 10924
(845) 360-5112

To:

Table of Contents

ICE MAKER, CUBE-STYLE - MANITOWOC IDT0450A (ITEM 1) 1
REFRIGERATOR, REACH-IN - BEVERAGE AIR HRPS1HC-1HS (ITEM 2) 5
REFRIGERATOR, REACH-IN - BEVERAGE AIR HRPS2HC-1HS (ITEM 3) 7
WORK TABLE, PORTABLE - IMC/TEDDY WT-3060 (ITEM 4) 9
HAND SINK, WALL MNTD. - IMC/TEDDY WS-1D (ITEM 5) 11
3-COMPARTMENT SINK - IMC/TEDDY SCS-34-2020-20RL (ITEM 6) 13
SHELF, WALL MOUNT - EAGLE GROUP GWB1448VG (ITEM 7) 15
UNDERBAR 3 COMPARTMENT SINK - KROWNE KR19-53C (ITEM 10) 17
TRASH RECEPTACLE, INDOOR - RUBBERMAID COMMERCIAL PRODUCTS 1971258 (ITEM 11) 18
UNDERBAR FILLERS & DRAINBOARDS - KROWNE KR24-C18L (ITEM 12) 20
UNDERBAR ALL-IN-ONE STATION - KROWNE KR24-MX68A (ITEM 13) 22
BACK BAR CABINET, REFRIGERATED - GLASTENDER, INC. C1FL32 (ITEM 14) 25
UNDERBAR ALL-IN-ONE STATION - KROWNE KR24-MX68A (ITEM 15) 28
UNDERBAR FILLERS & DRAINBOARDS - KROWNE KR24-C18R (ITEM 16) 31
BACK BAR COOLER - KROWNE BS84 (ITEM 18) 33

ICE MACHINE WARRANTY

Manitowoc Ice, Inc. (hereinafter referred to as the "COMPANY") warrants for a period of thirty-six months from the installation date (except as limited below) that new ice machines manufactured by the COMPANY shall be free of defects in material or workmanship under normal and proper use and maintenance as specified by the COMPANY and upon proper installation and start-up in accordance with the instruction manual supplied with the ice machine. The COMPANY'S warranty hereunder with respect to the compressor shall apply for an additional twenty-four months, excluding all labor charges, and with respect to the evaporator for an additional twenty-four months, including labor charges.

The obligation of the COMPANY under this warranty is limited to the repair or replacement of parts, components, or assemblies that in the opinion of the COMPANY are defective. This warranty is further limited to the cost of parts, components or assemblies and standard straight time labor charges at the servicing location.

Time and hourly rate schedules, as published from time to time by the COMPANY, apply to all service procedures. Additional expenses including without limitation, travel time, overtime premium, material cost, accessing or removal of the ice machine, or shipping are the responsibility of the owner, along with all maintenance, adjustments, cleaning, and ice purchases. Labor covered under this warranty must be performed by a COMPANY Contracted Service Representative or a refrigeration service agency as qualified and authorized by the COMPANY'S local Distributor. The COMPANY'S liability under this warranty shall in no event be greater than the actual purchase price paid by customer for the ice machine.

The foregoing warranty shall not apply to (1) any part or assembly that has been altered, modified, or changed; (2) any part or assembly that has been subjected to misuse, abuse, neglect, or accidents; (3) any ice machine that has been installed and/or maintained inconsistent with the technical instructions provided by the COMPANY; or (4) any ice machine initially installed more than five years from the serial number production date. This warranty shall not apply if the Ice Machine's refrigeration system is modified with a condenser, heat reclaim device, or parts and assemblies other than those manufactured by the COMPANY, unless the COMPANY approves these modifications for specific locations in writing.

THIS WARRANTY IS IN LIEU OF ALL OTHER WARRANTIES OR GUARANTEES OF ANY KIND, EXPRESSED OR IMPLIED, INCLUDING ANY IMPLIED WARRANTY OF MERCHANTABILITY OR FITNESS FOR A PARTICULAR PURPOSE.

In no event shall the COMPANY be liable for any special, indirect, incidental or consequential damages. Upon the expiration of the warranty period, the COMPANY'S liability under this warranty shall terminate.

The foregoing warranty shall constitute the sole liability of the COMPANY and the exclusive remedy of the customer or user. To secure prompt and continuing warranty service, the warranty registration card or register on line within five (5) days from the installation date.

MANITOWOC ICE, INC.
2110 So. 26th St., P.O. Box 1720, Manitowoc, WI 54221-1720
Telephone: 920-682-0161 • Fax: 920-683-7585
Web Site - www.manitowocice.com
Form 80-0373-3 Rev. 01/02

Ice Storage Bins

Ice Storage Bins

Model

☐ D320 ☐ D400 ☐ D420 ☐ D570 ☐ D970

D Bins

.75" (1.90 cm) Bin drain

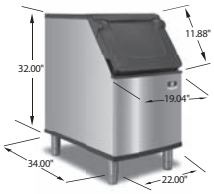

D320
264 lbs. (120 kgs)

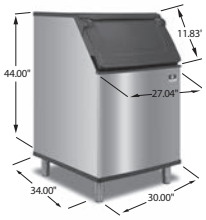

D570
532 lbs. (241 kgs)

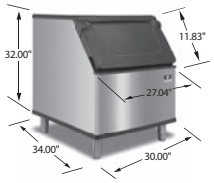

D400
365 lbs. (166 kgs)

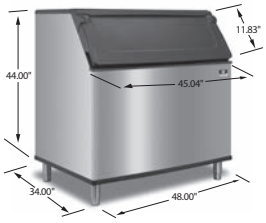

D970
882 lbs (400 kgs)

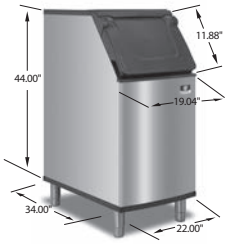

D420
383 lbs. (174 kgs)

Ergonomic NSF approved sanitary ice scoop included

D Bin Features

New Sanitary Scoop Ergonomic NSF approved sanitary ice scoop included with each bin. Built-in knuckle and thumb guard. Unique molded retaining lip allows maximum scooping every time. Per scoop capacity approximately 5.3/ lbs (2.4 kg)

Scoop Holder options New built-in scoop holder, keeps the ice scoop handle above the ice, or purchases the optional NSF approved External Scoop Holder Kit # K00461.

New Door design Clever built in side grips allow you to lift the bin door from anywhere you are standing (left, right or center) even when you have just one hand free.

Foamed Insulated Door Insulates the ice bin, reduces sweat on the door, helps keep ice lasting longer.

Stay up door Unique cammed bin door self-latch keeps the door in the open position and keeps the employee safe when scooping ice.

Ergonomic Door design Door is angled 53 degrees to allow for easier access to the ice in the bin especially when scooping from the bottom.

Duratech Metal Finish Manitowoc exterior material has better corrosion resistance than stainless steel, is smudge resistant and easy to keep clean.

New Bin liner Polyurethane Artic Blue bin liner accentuates the crisp clear ice from a Manitowoc Ice Machine.

Warranty

Bin & Accessories: 3 Year Parts & Labor.

	D-Bin Capacities				D-Bin Dimensions					
	*Application Capacity		**2018 AHRI Capacity		Height		Width		Depth	
D Bin Model	lbs.	kgs	Cu. ft	Cu. M	in.	cm	in.	cm	in.	cm
D320	264	119.90	8.9	0.25	38	96.5	22	55.9	34	86.4
D420	383	173.79	12.9	0.37	50	127	22	55.9	34	86.4
D400	365	165.70	12.3	0.35	38	96.5	30	76.2	34	86.4
D570	532	241.14	17.9	0.51	50	127	30	76.2	34	86.4
D970	882	400.11	29.7	0.84	50	127	48	121.9	34	86.4

*Application Capacity based on 90% of the total volume x 33 lbs/ ft3 average density of ice.
Ice must be managed
***2018 AHRI certified measurement for bin capacity

Above bin heights include leg height of of 6" / 15.24 cm
All bins include a sanitary plastic scoop and one set of adjustable legs chrome legs (6-7.75in/15.24-20.32cm).
External Scoop holder order separately Kit # K00461
Metal Scoop order separately Kit # K00463

Manitowoc Ice reserves the right to make changes to the design or specifications without prior notice.

2110 South 26th Street
Manitowoc, WI 54220

Tel: 1.920.682.0161
Fax: 1.920.683.7589

www.manitowocice.com
6453E
6/22

Manitowoc®

Ice Storage Bins

D Bins

Indigo Ice Machines Series												
Machine			iT420	iT620	iT0300	iT450	iT0500 &iF0500N	iF0600N, iF0600C, iT0750	iF0900N, iT0900, iF0900C	iT1200, iT1200C	iF1400C, iF1800C	iT1500, iT1900
Machine Capacity @90/70 F			375	465	240	378	440	555, 530	710, 714	950, 1000	1200 1470 1600	1360, 1455
Bins	Bin Cap	Width	22"	22"	30"	30"	30"	30"	30"	30"	30"	48"
D320	264	22"	*	*								
D420	383	22"	*	*								
D400	365	30"	K00472	K00472	*	*	*	*	NR	NR	NR	
D570	532	30"	K00472	K00472	*	*	*	*	*	*	NR	
D970	882	48"	NR	NR	NR	K00470	K00470	K00470	K00470	K00470	K00471 + K00470	*

Manitowoc Flaker and Nugget Machines											
		Machine	RNP0320	RFP0320	RNP0620	RFP0620	RNF1020	RFF1220C	RNF1100	RFF1300 & RNF2000C	RFF2200C
Machine cap			251	286	451	540	825	958	825	874	1702
Bins	Bin cap	Width	22"	22"	22"	22"	22"	22"	30"	30"	36.7"
D320	264	22"	*	*	NR	NR	NR	NR			
D420	383	22"	*	*	*	*	NR	NR			
D400	365	30"	K00472	K00472	K00472	K00472	NR	NR	NR	NR	
D570	532	30"	NR	K00472	K00472	K00472	NR	NR	*	*	
D970	882	48"	NR	NR	K00473	K00473	K00473 if 2 used.	K00473 if 2 used.	K00470	K00470	K00470

An optional adapter is required when putting a narrower ice machine on a wider bin.
* No adapter is needed
NR= Not Recommend. Bin too small or too large for application.
Putting a wider machine on narrower bin is not an option.
Machines side by side must be water cooled, remote, or use a top air discharge for self-contained air cooled.
Application Bin Capacity shown in lbs using the AHRI rating based on 90% of total volume x 33 lbs/ft3 average density of ice.
Machine capacity shown in lbs/24hrs using the AHRI rating base at 90F ambient, 70F water temperature

Available Accessories

See price book for replacement: scoops, legs, specialty legs and casters

K00146 Convenient Ice Bagger

Includes bagger, D-bin adapter, and 250 bags and ties (Not for D320 or D400) Order K00068 replacement bags

K00461 External Scoop Holder

NSF approved. Can be mounted on the left or right side of bins, horizontally or vertically or on a wall.

K00463 Metal Scoop

Indestructible NFS approved aluminum alloy with sanitary knuckle and thumb guard. Works with K00461external scoop holder or hangs inside the D-Bin series. Limited life time guarantee.

K00462 Secure Fastening Kit

Securely fast the Indigo NXT ice machine head to the pre-drilled inserts on the back of the D-bin series. Stainless steel flanged feet attach to bin and can be screwed to the floor

Manitowoc Ice reserves the right to make changes to the design or specifications without prior notice.

2110 South 26th Street
Manitowoc, WI 54220

Tel: 1.920.682.0161
Fax: 1.920.683.7589

www.manitowocice.com
6453E
6/22

Manitowoc

LIMITED WARRANTY FOR ICE STORAGE BIN & DISPENSERS

LIMITED WARRANTY

Manitowoc Ice a division of Manitowoc FSG Operations, LLC, ("Company") warrants that new Ice Storage Bins or Dispensers sold by Company shall be free of defects in material or workmanship under normal and proper use and maintenance as specified by the Company and upon proper installation and start-up in accordance with the instruction manual supplied.

WHAT IS COVERED

- Parts and Labor for a period of three (3) years.
- Accessory Ice Transport Carts for two (2) years parts and labor.

The Ice Storage Bin / Dispenser warranty begins on the date of the original installation. This warranty shall not apply to any Ice Storage Bin or Dispenser initially installed more than five (5) years from the serial number production date.

The obligation of the Company under this warranty is limited to the repair or replacement of parts, components, or assemblies that in the sole opinion of the Company are defective. This warranty is further limited to the cost of parts, components or assemblies and standard straight time labor charges at the servicing location.

Time and hourly rate schedules, as published from time to time by the Company, apply to all service procedures. Additional expenses including without limitation, travel time, overtime premium, material cost, accessing or removal of the Ice Storage Bin / Dispenser, or shipping are the responsibility of the purchaser, along with all maintenance, adjustments, cleaning, and ice purchases. Labor covered under this warranty must be performed by an approved Company contracted Service Representative or a refrigeration service agency as qualified and authorized by the Company's local Distributor. The Company's liability under this warranty shall in no event be greater than the actual purchase price paid by purchaser for the Ice Storage Bin or Dispenser.

EXCLUSIONS FROM COVERAGE

- Repair or replacement of parts required because of misuse, improper care or storage, negligence, alteration, use of incompatible supplies or lack of specified maintenance shall be excluded.
- Normal maintenance items.
  Failures caused by adverse environmental, water conditions, or improper drainage.
- Improper or unauthorized repair.
- Any Ice Storage Bin / Dispenser that has been installed and/or maintained inconsistent with the instructions provided by the Company.
- Parts subject to damage beyond the control of Company, or to Ice Storage Bin's / Dispenser's which have been subject to accidents, damage in shipment, fire, floods, other hazards or acts of God that are beyond the control of the Company.
- This Limited Warranty shall not apply if the Ice Storage Bin / Dispenser is modified with parts and assemblies other than those manufactured by the Company, unless the Company approves these modifications for specific locations in writing prior to the commencement of such modification.

LIMITATIONS OF LIABILITY

The preceding paragraphs set forth the exclusive remedy for all claims based on failure of, or defect in, Ice Storage Bins or Dispensers sold hereunder, whether the failure or defect arises before or during the warranty period, and whether a claim, however instituted, is based on contract, indemnity, warranty, tort (including negligence), strict liability, implied by statute, common-law or otherwise , and Company and agents shall not be liable for any claims for personal injuries or consequential damages or loss, howsoever caused. Upon the expiration of the warranty period, all such liability shall terminate. THE FOREGOING WARRANTIES ARE EXCLUSIVE AND IN LIEU OF ALL OTHER WARRANTIES, WHETHER WRITTEN, ORAL, IMPLIED OR STATUTORY NO IMPLIED WARRANTY OF MERCHANTABILITY OR FITNESS FOR PARTICULAR PURPOSE SHALL APPLY, COMPANY DOES NOT WARRANT ANY PRODUCTS OR SERVICES OF OTHERS

REMEDIES

The liability of Company for breach of any warranty obligation hereunder is limited to: (i) the repair or replacement of the Ice Storage Bin or Dispenser on which the liability is based, or with respect to services, re-performance of the services; or (ii) at Company's option, the refund of the amount paid for said equipment or services. Any breach by Company with respect to any item or unit of equipment or services shall be deemed a breach with respect to that item or unit or service only

WARRANTY CLAIM PROCEDURE

Customer shall be responsible to:

- Complete and return warranty registration card or register on line within five (5) days from the installation date.
- All warranty service must be preformed by an approved Manitowoc contracted or authorized Service Representative. To schedule a service appointment contact your local Manitowoc Service Representative or visit us at www.manitowocice.com to find a Service Representative near you.

GOVERNING LAW

This Limited Warranty shall be governed by the laws of the state of Wisconsin, USA, excluding their conflicts of law principles. The United Nations Convention on Contracts for the International Sale of Goods is hereby excluded in its entirety from application to this Limited Warranty

COMPLETE AND RETAIN FOR YOUR RECORD:

Distributor/Dealer _____

Model Number _____

Serial Number _____

Installation Date _____

Manitowoc Ice
2110 South 26th Street
P.0. Box 1720
Manitowoc, WI 54221-1720
Web site: www.manitowocice.com

Rev 2 1/2/2012

BEVERAGE-AIR

Project: _____	AIA#
Item: _____	
Location: _____	SIS#
Approved:	

HORIZON TOP MOUNT REACH-IN

HRPS1HC Half-Solid Door Reach-In Refrigerator

Hydrocarbon Series

MODEL:
HRPS1HC-1HS

HRPS1HC TOP MOUNT REACH-IN REFRIGERATOR

3 Year Parts / Labor Warranty

Additional 4 Year Compressor Warranty

CABINET CONSTRUCTION

- Exterior is stainless steel front and sides
- Stainless steel interior
- Full electronic control
- One piece grille
- LED interior light
- Self-closing doors with 120º stay-open feature, on cam-lift hinges
- Field reversible doors
- Door locks
- Snap-in magnetic gaskets for positive door seal
- Three (3) heavy-duty epoxy coated wire shelves
- 6” Heavy-duty casters, two (2) with brakes
- 8’ Cord and plug (see electrical data for details)

OPTIONS & ACCESSORIES

- Tray slide pair, 1 tray slide set for (1) 18” x 26” or (2) 14” x 18” pans (A)
- Stainless steel universal tray slide pair,1 tray slide set for (1) 18” x 26” or (2) 14” x 18” pans (AC)
- Tray slide kit #4 (19 sets per half section)
- Additional shelves
- Shelf clips
- Stainless steel breaker
- 6” Legs seismic/flanged
- 3” Casters
- Remote option* (see note on back page)

REFRIGERATION SYSTEM

- Uses environmentally friendly, energy efficient R290 refrigerant, and meets all regulatory requirements for CARB, SNAP, DOE & more
- Hot gas condensate evaporator
- Adaptive defrost
- Epoxy coated evaporator coil
- Maintains product temperatures between 36°F and 38°F

Please verify qualifying units by visiting:
www.energystar.gov/cfs

3779 Champion Blvd., Winston-Salem, NC 27105
1-888-845-9800 Fax: 1-336-245-6453
Beverage-Air.com Sales@bevair.com

Specifications are subject to change without prior notice. Rev. 2/22

BEVERAGE-AIR

Top Mount Reach-In Refrigerator
Model: HRPS1HC-1HS

MODEL	HRPS1HC-1HS
EXTERNAL DIMENSIONAL DATA	
Width Overall	26”
Depth Overall with Handle	33 ⅝”
Height Overall	85”
Number of Doors	2
Depth with Door Open 90°	55 ⅛”
Door Opening (in)	21 ⅝” x 29 ⅝”
INTERNAL DIMENSIONAL DATA	
NET Capacity (cubic ft.)	21.17
Internal Width Overall (in)	22”
Internal Depth Overall (in)	26 ⅛”
Internal Height Overall (in)	62”
Number of Shelves	3
ELECTRICAL DATA	
Full Load Amperes 115/60/1	2.7
REFRIGERATION DATA	
Horsepower	1/4
Capacity (BTU/Hr)	1702
Heat Rejection (BTU/Hr)	2553
Charge (lbs/grams)	0.2425/110
SHIPPING DATA	
Gross Weight (crated lbs)	370 lbs
Height - Crated	88”
Width - Crated	33”
Depth - Crated	41”

*NOTE: Remote units are field wired and come with 6” legs.
Refrigerant must be specified at time of order.

Model Views

Required Clearance: Top 12”, Rear 3”, Sides 0”

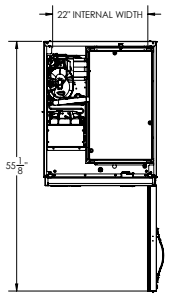

PLAN VIEW

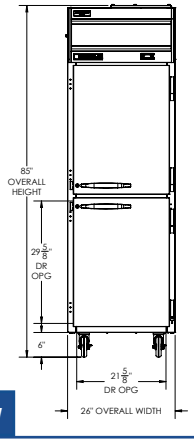

ELEVATION VIEW

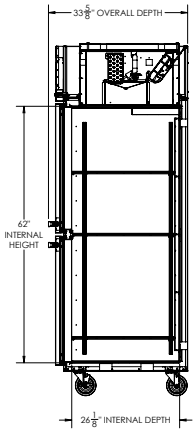

SIDE VIEW

ELECTRICAL CONNECTION

115/60/1
NEMA 5-15P

Unit pre-wired at factory and include 8’ long cord and plug set.

3779 Champion Blvd., Winston-Salem, NC 27105 1-888-845-9800 Fax: 1-336-245-6453 Beverage-Air.com Sales@bevair.com

an Ali Group Company

BEVERAGE-AIR

Project: _____	AIA#
Item: _____	
Location: _____	SIS#
Approved:	

HORIZON TOP MOUNT REACH-IN

HRPS2HC Half-Solid Double Door Reach-In Refrigerator

Hydrocarbon Series

MODEL:
HRPS2HC-1HS

3 Year Parts / Labor Warranty

Additional 4 Year Compressor Warranty

CABINET CONSTRUCTION

- Exterior is stainless steel front and sides
- Stainless steel interior
- Full electronic control
- One piece grille
- LED interior light
- Self-closing door with 120º stay-open feature, on cam-lift hinges
- Field reversible doors
- Door locks
- Snap-in magnetic gaskets for positive door seal
- Six (6) heavy-duty epoxy coated wire shelves
- 6” Heavy-duty casters, two (2) with brakes
- 8’ Cord and plug (see electrical data for details)

OPTIONS & ACCESSORIES

- Tray slide pair, 1 tray slide set for (1) 18” x 26” or (2) 14” x 18” pans (A)
- Stainless steel universal tray slide pair,1 tray slide set for (1) 18” x 26” or (2) 14” x 18” pans (AC)
- Tray slide kit #4 (19 sets per half section)
- Additional shelves
- Shelf clips
- Stainless steel breaker
- 6” Legs seismic/flanged
- 3” Casters
- Remote option* (see note on back page)

REFRIGERATION SYSTEM

- Uses environmentally friendly, energy efficient R290 refrigerant, and meets all regulatory requirements for CARB, SNAP, DOE & more
- Hot gas condensate evaporator
- Adaptive defrost
- Epoxy coated evaporator coil
- Maintains product temperatures between 36°F and 38°F

HRPS2HC TOP MOUNT REACH-IN REFRIGERATOR

Please verify qualifying units by visiting:
www.energystar.gov/cfs

3779 Champion Blvd., Winston-Salem, NC 27105
1-888-845-9800 Fax: 1-336-245-6453
Beverage-Air.com Sales@bevair.com

Specifications are subject to change without prior notice. Rev. 10/22

BEVERAGE-AIR

Top Mount Reach-In Refrigerator
Model: HRPS2HC-1HS

MODEL	HRPS2HC-1HS
EXTERNAL DIMENSIONAL DATA	
Width Overall	52”
Depth Overall with Handles	33 ⅝”
Height Overall	85”
Number of Doors	4
Depth with Door Open 90°	55 ⅛”
Door Openings (in)	21 ⅝” x 29 ⅝”
INTERNAL DIMENSIONAL DATA	
NET Capacity (cubic ft.)	46.88
Internal Width Overall (in)	48”
Internal Depth Overall (in)	25 ⅞”
Internal Height Overall (in)	62”
Number of Shelves	6
ELECTRICAL DATA	
Full Load Amperes 115/60/1**	6.0
REFRIGERATION DATA	
Horsepower	1/3
Capacity (BTU/Hr)	2800
Heat Rejection (BTU/Hr)	4200
Charge (lbs/grams)	0.3307/150
SHIPPING DATA	
Gross Weight (crated lbs)	571 lbs
Height - Crated	88”
Width - Crated	55”
Depth - Crated	36”

*NOTE: Remote units are field wired and come with 6” legs.
Refrigerant must be specified at time of order.

Model Views

Required Clearance: Top 12”, Rear 3”

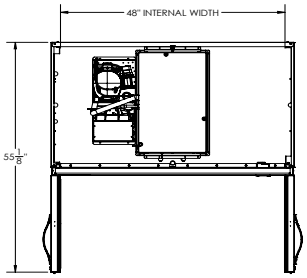

PLAN VIEW

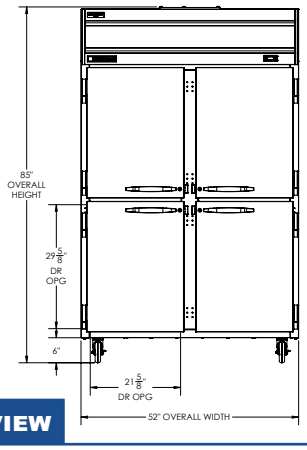

ELEVATION VIEW

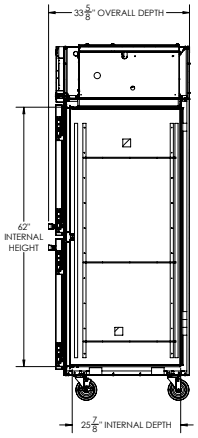

SIDE VIEW

ELECTRICAL CONNECTION

115/60/1**
NEMA 5-15P

Unit pre-wired at factory and include 8’ long cord and plug set.

** NOTE: This unit utilizes variable speed compressor technology. The compressor can experience nuisance tripping on Class A GFCI outlets which have a trip limit of 4 mA to 6 mA. To avoid this issue in a location that requires GFCI circuit protection, Beverage-Air recommends using a HUBBELL Model Number GFRST83W 20A Heavy Duty Hospital Grade Self-Test GFCI Receptacle.

3779 Champion Blvd., Winston-Salem, NC 27105 1-888-845-9800 Fax: 1-336-245-6453 Beverage-Air.com Sales@bevair.com
an Ali Group Company

IMC/TEDDY
DECADES OF FINE CRAFTSMANSHIP

WT
Worktables

General Information

Project Name: _____

Consultant: _____

Item #: _____

Model #: _____

Quantity: _____

Model WT

Specifications

WT Worktables are constructed of 14GA or 16GA type 300 series stainless steel polished to a #4 brush finish.

Top is constructed of 14GA or 16GA S/S with 1½" thick square edge with 16GA S/S reinforcement channels underneath. Top has S/S gussets welded underneath for 16GA S/S 1⅝" diameter tubular legs. Legs have S/S adjustable bullet feet.

WT worktables include an 18GA S/S undershelf welded to legs with edges turned down for safety & stability. Sound deadening is standard on tables. Additional legs provided on tables 84" & longer.

Crossrails, when required, are constructed of 1¼" OD 16GA S/S tubing.

All tables are fully welded & ship assembled. Knock down tables are available, upon request.

Product Guide & Features

IMC Worktables are easily cleanable. All corners are coved, and all seams are fully welded and polished.

This versatile table is designed to retain integrity and finish over long periods. They are engineered for heavy use in any facility and all parts are stainless steel.

Options are designed to convert this table for varied use in different applications throughout the facility.

Options*

- ☐ **US-16** - 16GA S/S Undershelf Upgrade
- ☐ Removable Undershelf
- ☐ **RE** - Rolled Edge
- ☐ **ME** - Marine Edge (No-Drip Edge)
- ☐ **CR** - Crossrails (In Lieu of Undershelf)
- ☐ **SS6** - Side Splash 6" High
- ☐ **SS810** - Side Splash 8" or 10" High
- ☐ **C4** - 5" Dia. Swivel Casters 2 w/ Brakes (4)
- ☐ **FF-50** - Flanged Feet
- ☐ **CC** - Corner or Column Cutout
- ☐ Drawer w/ Lock
- ☐ Sink - Size _ x _ x_

***See Price List for Complete Options**

PROUDLY MADE IN THE USA

NSF

WT-011 0321

IMC/TEDDY
DECADES OF FINE CRAFTSMANSHIP

WT
Worktables

DRAWINGS

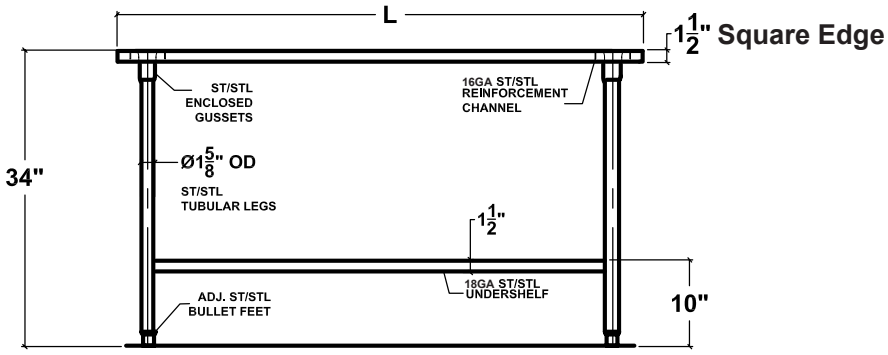

FRONT ELEVATION

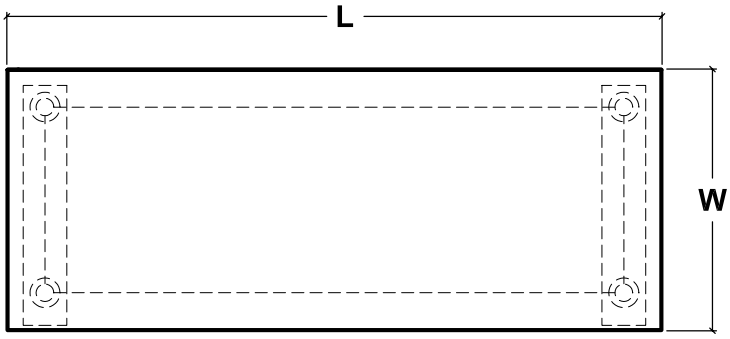

PLAN

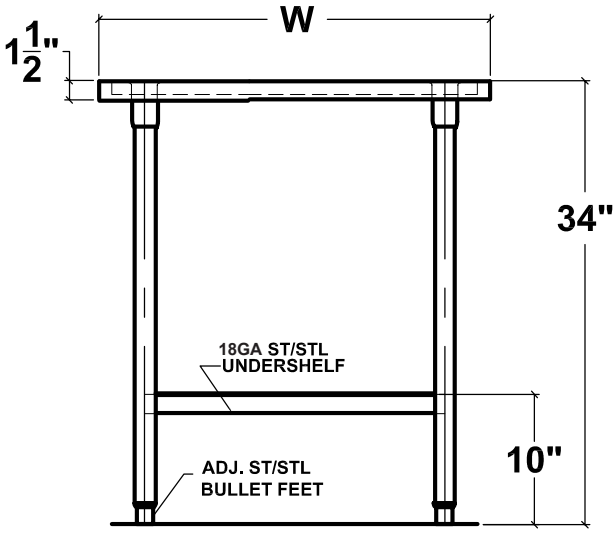

SIDE ELEVATION

Specifications subject to change without notice.

WT-011 0321

IMC/TEDDY
DECADES OF FINE CRAFTSMANSHIP

WS
Wall Mounted Hand Sink

General Information

Project Name: _____

Consultant: _____

Item #: _____

Model #: _____

Quantity: _____

WS-2S

WS-1SX

Specifications

WS Wall Mounted Hand Sink is constructed of 16GA type 300 series stainless steel, with a tall backsplash and non-drip marine edges, coved corner sink bowl and built-in pitch to 1½" waste outlet. Stainless steel front apron with rear flange and "Z" strip provide attachment to wall. Deck mounted soap dispenser has 1-pint capacity. Faucet to be T&S #B-1105, or equal, splash-mounted, with rigid gooseneck and wrist-action handles.

WS-X Model - same as above without faucet and soap dispenser. Faucet hole can be provided.

Product Guide

IMC Hand Sinks are easily cleanable without the use of tools. All corners are coved, and all seams are fully welded and polished.

Large oversize deck provides space for faucet, soap dispenser and integral towel dispenser.
High backsplash protects wall and keeps sink sanitary. Large integral apron conceals all plumbing.

Versatile design permits the use of large variety of plumbing options and accessories.

WALL HAND SINK - WS

Sink Only Models	Description	Sink w/ Faucet Models	Overall Size
☐ WS-1DX	1 Deck Hole	☐ WS-1D	20½" x 19¼" x 29¼"
☐ WS-1SX	1 Splash Hole	☐ WS-1S	20½" x 19¼" x 29¼"
☐ WS-2DX	2 Deck Holes	☐ WS-2D	20½" x 19¼" x 29¼"
☐ WS-2SX	2 Splash Holes	☐ WS-2S	20½" x 19¼" x 29¼"

PROUDLY MADE IN THE USA NSF

WS-50 0318

IMC/TEDDY
DECADES OF FINE CRAFTSMANSHIP

WS
Wall Mounted Hand Sink

DRAWINGS

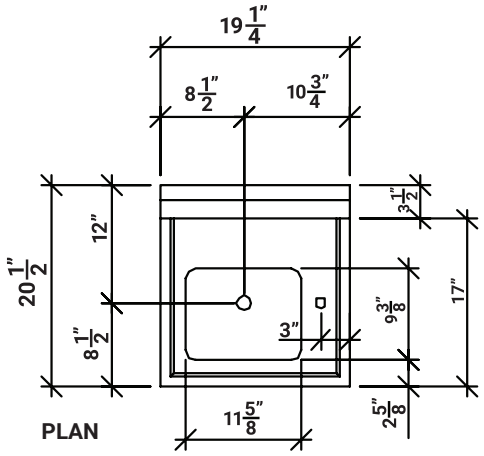

PLAN

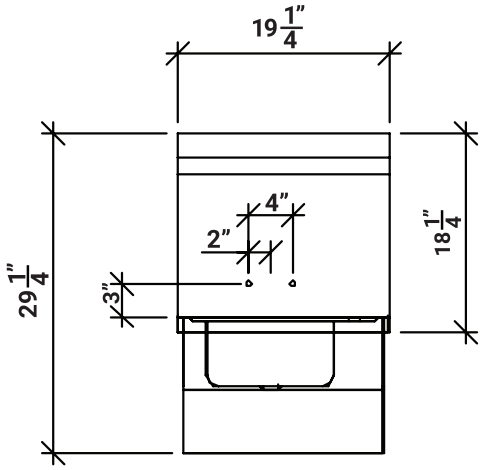

FRONT VIEW

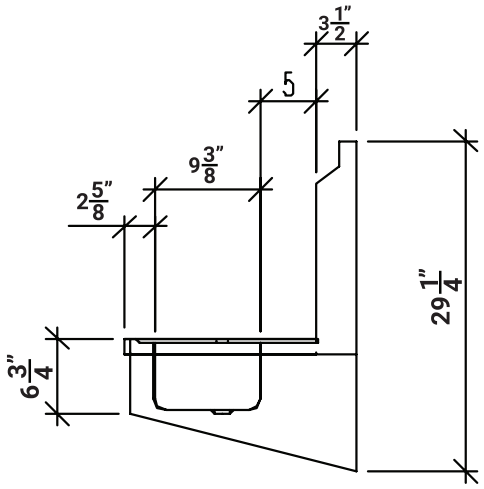

SECTION

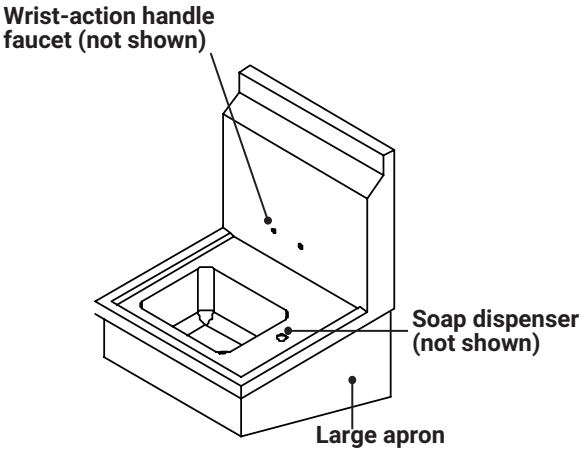

OPTIONS

- ☐ **SS** - Side Splashes (Pair)
- ☐ **TLG** - Adjustable Tubular Legs
- ☐ **TWB** - Tubular Wall Brackets
- ☐ **RSOD** - Rear Sink Overflow Drain
- ☐ **CBW** - Custom Bowl Size: _____

ACCESSORIES

(See Price Book Pg. 58-60)

RGLH
Gooseneck Faucet

EFD
Electronic Faucet

EW-S
Eye Wash Faucet

TD
Towel Dispenser

CTSD
Combo Towel & Soap Dispenser

ITSD
Integral Towel & Soap Dispenser

Specifications subject to change without notice.

WS-50 0318

IMC/TEDDY
DECADES OF FINE CRAFTSMANSHIP

SCS-3
3 Compartment Scullery Sink

General Information

Project Name: _____

Consultant: _____

Item #: _____

Model #: _____

Quantity: _____

Shown with Flush Front, Left & Right Drainboards & Optional Overflow Holes & Flanged Feet

Specifications

SCS-3 Model Scullery Sinks are constructed of 14GA or 16GA type 300 stainless steel with single or multi-compartment bowls and double wall separators. Sinks are mounted on 16GA, 1 5/8 stainless steel tubes with stainless steel adjustable feet for leveling. Sink bowls are coved at all corners and pitched to a 3 1/2" waste cutout.

Full length backsplash is 10" high and holes for faucets 8" on center accommodates your choice of faucets. The entire unit is finished with a satin brush finish. Drainboard extensions are separately supported with stainless steel legs, as required.

Sound Deadening is standard on all scullery sinks.

Product Guide

IMC Scullery/Service Sinks Model "SCS" are designed for heavy duty application in large or medium Institutional Facilities or where constant use is likely.

Options available are designed to make this product suitable in a variety of locations in the facility for applications, such as Deli, Vegetable or Bakery sinks or for pot cleaning. For economy, specify 16GA instead of 14GA.

DRAWINGS

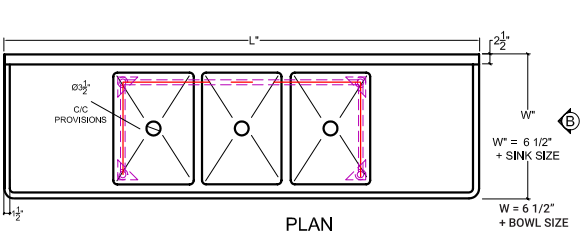

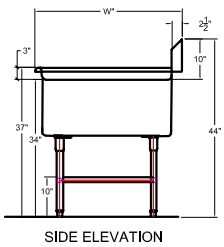

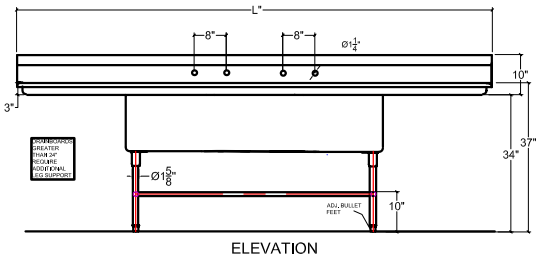

*Non-flush front: add sink bowl size + 6½" for extra width

SCS-3 70 0322

IMC/TEDDY
DECADES OF FINE CRAFTSMANSHIP

SCS-3
3 Compartment Scullery Sink

3 COMPARTMENT SCULLERY SINK

1 Drainboard				
14GA Model	16GA Model	Overall Size (W x L x H)	Bowl Size	Drainboard Length
◻ SCS-34-1620-18R	◻ SCS-36-1620-18R	24" x 69½" x 44"	16" x 20"	18"
◻ SCS-34-1620-24R	◻ SCS-36-1620-24R	24" x 75½" x 44"	16" x 20"	24"
◻ SCS-34-1620-30R	◻ SCS-36-1620-30R	24" x 81½" x 44"	16" x 20"	30"
◻ SCS-34-1620-36R	◻ SCS-36-1620-36R	24" x 87½" x 44"	16" x 20"	36"
◻ SCS-34-2020-20R	◻ SCS-36-2020-20R	24" x 83½" x 44"	20" x 20"	20"
◻ SCS-34-2020-24R	◻ SCS-36-2020-24R	24" x 87½" x 44"	20" x 20"	24"
◻ SCS-34-2020-30R	◻ SCS-36-2020-30R	24" x 93½" x 44"	20" x 20"	30"
◻ SCS-34-2020-36R	◻ SCS-36-2020-36R	24" x 99½" x 44"	20" x 20"	36"
◻ SCS-34-2424-24R	◻ SCS-36-2424-24R	28" x 99½" x 44"	24" x 24"	24"
◻ SCS-34-2424-30R	◻ SCS-36-2424-30R	28" x 105½" x 44"	24" x 24"	30"
◻ SCS-34-2424-36R	◻ SCS-36-2424-36R	28" x 111½" x 44"	24" x 24"	36"
◻ SCS-34-2028-24R	◻ SCS-36-2028-24R	32" x 87½" x 44"	20" x 28"	24"
◻ SCS-34-2028-30R	◻ SCS-36-2028-30R	32" x 93½" x 44"	20" x 28"	30"
◻ SCS-34-2028-36R	◻ SCS-36-2028-36R	32" x 99½" x 44"	20" x 28"	36"
2 Drainboards				
14GA Model	16GA Model	Overall Size (W x L x H)	Bowl Size	Drainboard Length
◻ SCS-34-1620-18RL	◻ SCS-36-1620-18RL	24" x 86" x 44"	16" x 20"	18"
◻ SCS-34-1620-24RL	◻ SCS-36-1620-24RL	24" x 98" x 44"	16" x 20"	24"
◻ SCS-34-1620-30RL	◻ SCS-36-1620-30RL	24" x 110" x 44"	16" x 20"	30"
◻ SCS-34-1620-36RL	◻ SCS-36-1620-36RL	24" x 122" x 44"	16" x 20"	36"
◻ SCS-34-2020-20RL	◻ SCS-36-2020-20RL	24" x 102" x 44"	20" x 20"	20"
◻ SCS-34-2020-24RL	◻ SCS-36-2020-24RL	24" x 110" x 44"	20" x 20"	24"
◻ SCS-34-2020-30RL	◻ SCS-36-2020-30RL	24" x 122" x 44"	20" x 20"	30"
◻ SCS-34-2020-36RL	◻ SCS-36-2020-36RL	24" x 134" x 44"	20" x 20"	36"
◻ SCS-34-2424-24RL	◻ SCS-36-2424-24RL	28" x 122" x 44"	24" x 24"	24"
◻ SCS-34-2424-30RL	◻ SCS-36-2424-30RL	28" x 134" x 44"	24" x 24"	30"
◻ SCS-34-2424-36RL	◻ SCS-36-2424-36RL	28" x 146" x 44"	24" x 24"	36"
◻ SCS-34-2028-24RL	◻ SCS-36-2028-24RL	32" x 110" x 44"	20" x 28"	24"
◻ SCS-34-2028-30RL	◻ SCS-36-2028-30RL	32" x 122" x 44"	20" x 28"	30"
◻ SCS-34-2028-36RL	◻ SCS-36-2028-36RL	32" x 134" x 44"	20" x 28"	36"

OPTIONS*

- ◻ **SB** - Scrap Basket
- ◻ **SRB** - Scrap Block
- ◻ **CRT** - Corner Turn
- ◻ **XDRB** - Extra Drainboard
- ◻ **RG** - Rack Guide
- ◻ **CC** - Column Cut Out
- ◻ **WHR** - Working Height Revision
- ◻ **WTR-48** - Waste Trough 6" x 48" x 4" Deep
- ◻ **FF-50** - Flanged Feet (Each)
- ◻ **BDR** - Basket Drain
- ◻ **16D-3** - 16" Deep Sink in Lieu of Standard
- ◻ **SCV** - Sink Cover - Stainless Steel
- ◻ **CST** - Cover Storage Compartment
- ◻ **PVH** - Provision for Heater
- ◻ **PWP** - Provision for Water Pump
- ◻ **DP** - Drainboard Pitched to Sink
- ◻ **SSU** - Stainless Steel Undershelf
- ◻ **RSP** - Integral Side Splash (Each)
- ◻ **NFF** - Non-Flush Front (Increases W)
- ◻ **LD** - Lever Drain
- ◻ **LDO** - Lever Drain with Overflow
- ◻ **KPSF** - 12" Kettle & Pot Sink Faucet
- ◻ **STG** - S/S Perforated Sanitizer Guard
- ◻ **ESB** - Enclosed Backsplash
- ◻ **SPB** - Support Bracket for Lever Drain Handle
- ◻ **PRFF** - Pre-Rinse Unit - 4" Centers, Splash Mounted
- ◻ **PUD** - Provision for Undercounter Dishwasher
- ◻ **SSA** - Stainless Steel Apron
- ◻ **CB** - Cutting Board
- ◻ **OFC** - Overflow Compartment

***See Price List for Complete Options**

Specifications subject to change without notice.

SCS-3 70 0322

IMC Teddy • 50 Ranick Drive East • Amityville, NY 11701 • (800) 221-5644 • info@imcteddy.com • www.imcteddy.com

Profit from the Eagle Advantage®

Specification Sheet

Item No.: _____
Project No.: _____
S.I.S. No.: _____

Wire Wall Shelf Kits

MODELS:

❑ *GWB1436C*	❑ *GWB1436V*	❑ *GWB1436VG*
❑ *GWB1448C*	❑ *GWB1448V*	❑ *GWB1448VG*
❑ *GWB1836C*	❑ *GWB1836V*	❑ *GWB1836VG*
❑ *GWB1848C*	❑ *GWB1848V*	❑ *GWB1848VG*

Short Form Specifications

Eagle Wire Wall Shelf Kit, model _____. (Chrome, Valu-Master® Gray Epoxy, Valu-Gard® Green Epoxy) finish. Open grid wire shelf with patented Quad-Truss® design, and two stationary wire wall mounts.

#GWB1436C
wire wall shelf kit

Design and Construction Features

- Includes one wire shelf and two stationary wall mounts.
- Eagle wire shelf features patented QuadTruss® design (patent #5,390,803), making shelves up to 25% stronger and provides a retaining ledge for increased stability and product retention.
- Available in 14˝ and 18˝ (356 and 457mm) widths, and 36˝ and 48˝ (914 and 1219mm) lengths.
- No tools required to attach shelf to wall brackets.
- Units available in chrome, Valu-Gard® green epoxy, or stainless steel finish.

Options / Accessories

❑ Ledges
❑ Dividers

EAGLE GROUP
100 Industrial Boulevard, Clayton, DE 19938-8903 USA
Phone: 302-653-3000 • Fax: 302-653-2065
www.eaglegrp.com

Foodservice Division: Phone 800-441-8440
MHC/Retail Display Divisions: Phone 800-637-5100

For custom configuration or fabrication needs, contact our **SpecFAB® Division.**
Phone: 302-653-3000 • Fax: 302-653-3091 • e-mail: specfab@eaglegrp.com

EG02.04 Rev. 12/08

Spec sheets available for viewing, printing or downloading from our online literature library at *www.eaglegrp.com*

Eagle Foodservice Equipment, Eagle MHC, SpecFAB®, and Retail Display are divisions of Eagle Group. ©2008 by the Eagle Group

EAGLE GROUP®
Profit from the Eagle Advantage®

Item No.: _____
Project No.: _____
S.I.S. No.: _____

Wire Wall Shelf Kits

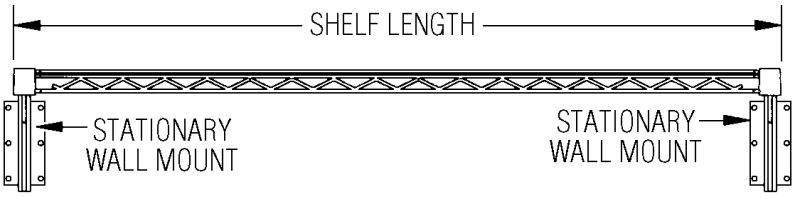

FRONT VIEW

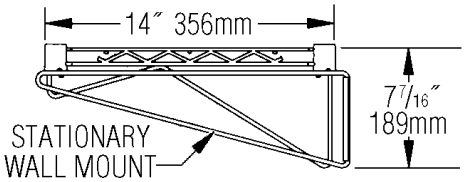

SIDE VIEW

chrome model #	Valu-Master® model #	Valu-Gard® model #	shelf width in.	shelf width mm	shelf length in.	shelf length mm	weight lbs.	weight kg
GWB1436C	***GWB1436V***	***GWB1436VG***	14″	356	36″	914	12	5.4
GWB1448C	***GWB1448V***	***GWB1448VG***	14″	356	48″	1219	14	6.4
GWB1836C	***GWB1836V***	***GWB1836VG***	18″	457	36″	914	14	6.4
GWB1848C	***GWB1848V***	***GWB1848VG***	18″	457	48″	1219	17	7.7

EAGLE GROUP
100 Industrial Boulevard, Clayton, DE 19938-8903 USA
Phone: 302-653-3000 • Fax: 302-653-2065
www.eaglegrp.com

Foodservice Division: Phone 800-441-8440
MHC/Retail Display Divisions: Phone 800-637-5100

Printed in U.S.A.
©2008 by Eagle Group
Rev. 12/08

Spec sheets available for viewing, printing or downloading from our online literature library at *www.eaglegrp.com*

Although every attempt has been made to ensure the accuracy of the information provided, we cannot be held responsible for typographical or printing errors. Information and specifications are subject to change without notice. Please confirm at time of order.

Model: _____ **Item #:** _____ **Date:** _____

Project: _____ **Qty:** _____ **Approved By:** _____

Royal Series Three Compartment Bar Sinks

Royal Series Underbar

KR19-43L

Standard Features

- Royal Series wall mount faucet & drains w/ overflows included
- KR19 includes a wall mount faucet
- KR24 includes deck mount faucet
- 1-1/2” left rear corner drains (Model 23-122)

Specifications

Sink Bowl	▪ 20 gauge stainless steel 10” x 14” x 10” deep ▪ Furnished with 1-1/2” IPS rear corner drain and 7-1/2” overflow pipe
Drainboard	▪ 20 gauge stainless steel reinforced with welded braces every 6”
Front Apron	▪ 20 gauge stainless steel clad over 20 gauge galvanized steel
Sides	▪ 20 gauge stainless steel
Backsplash	▪ 20 gauge stainless steel
Back & Bottom	▪ 20 gauge galvanized steel
Legs	▪ 1-5/8” tubular 16 gauge stainless steel with grey plastic bullet foot
Plumbing	▪ Hot/Cold Water: 1/2” IPS ▪ Drain: 1-1/2” IPS
Faucet	▪ 4” OC wall or deck mount faucet and ceramic cartridge valves

WARNING: Plumbing connections should be made by qualified personnel who will observe all applicable plumbing, sanitary and safety codes.

NSF Certified to NSF/ANSI 2

Model	Depth (Front to Back)	Length (A)	Drainboard Size (B)	Left Side to Drain (C)	Bowls	Bowl Location	Wgt. (lbs.)
KR19-33C	19”	36”	-	4”	3	Center	55
KR19-43L	19”	48”	12”	4”	3	Left	60
KR19-43R	19”	48”	12”	15”	3	Right	60
KR19-53C	19”	60”	(2) 12”	15”	3	Center	69
KR19-63C	19”	72”	(2) 18”	21”	3	Center	75
KR19-73C	19”	84”	(2) 24”	27”	3	Center	86
KR19-83C	19”	96”	(2) 30”	33”	3	Center	94

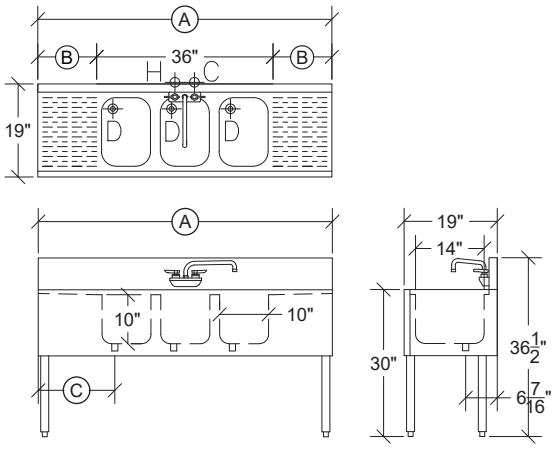

Model	Depth (Front to Back)	Length (A)	Drainboard Size (B)	Left Side to Drain (C)	Bowls	Bowl Location	Wgt. (lbs.)
KR24-33C	24”	36”	-	4”	3	Center	60
KR24-43L	24”	48”	12”	4”	3	Left	65
KR24-43R	24”	48”	12”	15”	3	Right	65
KR24-53C	24”	60”	(2) 12”	15”	3	Center	76
KR24-63C	24”	72”	(2) 18”	21”	3	Center	83
KR24-73C	24”	84”	(2) 24”	27”	3	Center	93

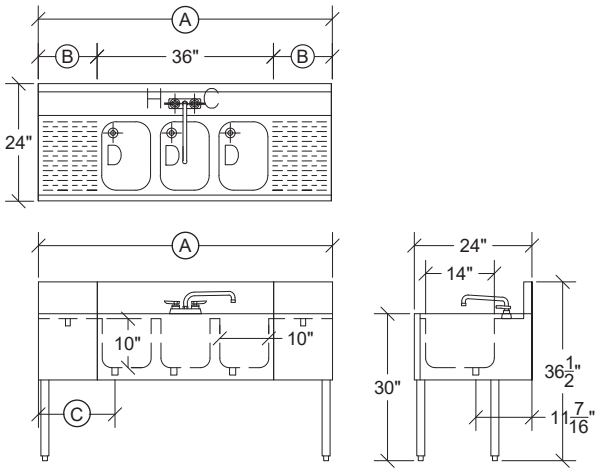

NOTE: Letter at end of Model Number represents Bowl Location

Krowne Metal Corporation • 100 Haul Rd. Wayne, NJ 07470 • P: (800) 631-0442 • customerservice@krowne.com • krowne.com

Due to our commitment to continued product improvement, specifications are subject to change without notice.

Rev. 02/2021 • 5.12

SLIM JIM® CONTAINERS

The Slim Jim® container delivers the durability needed for commercial environments combined with brand new innovation to increase worker productivity. New product features and accessories deliver the most efficient solution for collection, transportation, and disposal of multi-stream waste and recyclables.

Features and Benefits:

- Venting channels make removing liners up to 80% easier, improving productivity and reducing the risk of worker injury
- Four bag cinches secure liners around the rim of the container and allow for quick, knot-free liner changes
- Handles at the base and rim of the container improve grip and control while lifting and emptying full containers
- Rim with rib-strengthened design increases strength and resists crushing
- Build a recycling station with a variety of dolly and lid options to meet any facility need

COLORS AVAILABLE

Blue, Green, Black, Beige, Brown, Gray, Yellow*, Red*

* 23-gallon only

Material Composition:

Injection molded with a high-quality resin blend.

Accessories:

STAINLESS STEEL DOLLIES

- Slim Jim® Single Dolly
- Slim Jim® Double Dolly
- Slim Jim® Triple Dolly
- Slim Jim® Quadruple Dolly

RESIN DOLLY

- Slim Jim® Trainable Dolly

LIDS

- Bottles and Cans Lid
- Paper Lid
- Mixed Recycling Lid
- Hinged Lid
- Swing Lid

23-Gallon Slim Jim® Container

16-Gallon Slim Jim® Container

SLIM JIM® CONTAINERS

SKU #	DESCRIPTION	COLOR	CAPACITY		LENGTH		WIDTH		HEIGHT		PACK SIZE
			GAL	L	IN	CM	IN	CM	IN	CM	
1971258	SLIM JIM® CONTAINER	GRAY	16	61	22"	55.88	11"	27.94	25"	63.50	4
1955959	SLIM JIM® CONTAINER	BLACK	16	61	22"	55.88	11"	27.94	25"	63.50	4
1971259	SLIM JIM® CONTAINER	BEIGE	16	61	22"	55.88	11"	27.94	25"	63.50	4
1956181	SLIM JIM® CONTAINER	BROWN	16	61	22"	55.88	11"	27.94	25"	63.50	4
1971257	SLIM JIM® CONTAINER	BLUE	16	61	22"	55.88	11"	27.94	25"	63.50	4
1955960	SLIM JIM® CONTAINER	GREEN	16	61	22"	55.88	11"	27.94	25"	63.50	4
FG354060GRAY	SLIM JIM® CONTAINER	GRAY	23	87	22"	55.88	11"	27.94	30"	76.20	4
FG354060BLA	SLIM JIM® CONTAINER	BLACK	23	87	22"	55.88	11"	27.94	30"	76.20	4
FG354060BEIG	SLIM JIM® CONTAINER	BEIGE	23	87	22"	55.88	11"	27.94	30"	76.20	4
1956187	SLIM JIM® CONTAINER	BROWN	23	87	22"	55.88	11"	27.94	30"	76.20	4
1956185	SLIM JIM® CONTAINER	BLUE	23	87	22"	55.88	11"	27.94	30"	76.20	4
1956186	SLIM JIM® CONTAINER	GREEN	23	87	22"	55.88	11"	27.94	30"	76.20	4
1956188	SLIM JIM® CONTAINER	YELLOW	23	87	22"	55.88	11"	27.94	30"	76.20	4
1956189	SLIM JIM® CONTAINER	RED	23	87	22"	55.88	11"	27.94	30"	76.20	4
FG354007BLUE	SLIM JIM® CONTAINER	BLUE (RECYCLING)	23	87	22"	55.88	11"	27.94	30"	76.20	4
FG354007GRN	SLIM JIM® CONTAINER	GREEN (RECYCLING)	23	87	22"	55.88	11"	27.94	30"	76.20	4

162707 | 123456

©2016 Rubbermaid Commercial Products LLC

8900 Northpointe Executive Park Drive, Huntersville, NC 28078

Model:_____ Item #:_____ Date:_____

Project:_____ Qty:_____ Approved By:_____

Underbar Drainboards & Corner Drainboards

ROYAL SERIES

KR19-GS30 SHOWN

KR24-C24R SHOWN

Standard Features

- **Drainboard**
  20 gauge embossed stainless steel reinforced with welded braces every 6 inches. $^3/_4$" radius on all vertical and horizontal edges
- **Front Apron**
  20 gauge stainless steel clad over 20 gauge galvanized steel
- **Sides**
  20 gauge stainless steel
- **Backsplash**
  20 gauge stainless steel
- **Back and Bottom**
  20 gauge stainless steel
- **Legs**
  1 $^5/_8$" tubular 16 gauge stainless steel with grey plastic bullet foot
- **Plumbing**
  1" IPS drain connection

Optional Accessories

KR-201 4" x 4" Chase for Beer/Soda Lines
KR-203 $^3/_4$" x 3 $^1/_2$" Soda Line Cutout in Backsplash
KR-204 3 $^1/_2$" Round Cutout for Soda/Beer Lines in Drainboard
KR-301 Right End Return (Corner)
KR-302 Left End Return (Corner)
KR-310 Right End Splash for KR19
KR-303 Right and Left End Splash for KR19
KR-311 Left End Splash for KR19
KR-313 Left and Right Side Splash for KR24
KR-314 Right End Side Splash for KR24
KR-315 Left End Side Splash for KR24
KR-401 Cap Catcher and Bottle Opener
RS-"XX" Sound Deadened Single Speedrail ("XX" indicates size)
RD-"XX" Sound Deadened Double Speedrail ("XX" indicates size)

NSF
Conforms to NSF St. 2

Krowne Metal Corporation • 100 Haul Rd. Wayne, NJ 07470 • Toll Free: (800) 631-0442 • Fax: (973) 872-1129 • sales@krowne.com • krowne.com

Due to our commitment to continued product improvement, specifications are subject to change without notice.

Rev. 5/2020 • No. 5.245

Model:_____ Item #:_____ Date:_____

Project:_____ Qty:_____ Approved By:_____

Underbar Drainboards & Corner Drainboards

ROYAL SERIES

Underbar Drainboards

Model	Overall Length Ⓐ	Left Side to Drain Ⓑ	Depth Ⓒ	Back Side to Drain	Weight (lbs.)
KR19-GS12	12”	6”	19”	9-1/2”	38
KR24-GS12	12”	6”	24”	11-1/2”	43
KR19-GS18	18”	14”	19”	9-1/2”	44
KR24-GS18	18”	14”	24”	11-1/2”	49
KR19-GS24	24”	20”	19”	9-1/2”	50
KR24-GS24	24”	20”	24”	11-1/2”	55
KR19-GS30	30”	26”	19”	9-1/2”	56
KR24-GS30	30”	26”	24”	11-1/2”	61
KR19-GS36	36”	32”	19”	9-1/2”	62
KR24-GS36	36”	32”	24”	11-1/2”	68
KR19-GS42	42”	21”	19”	9-1/2”	68
KR24-GS42	42”	21”	24”	11-1/2”	75
KR19-GS48	48”	24”	19”	9-1/2”	74
KR24-GS48	48”	24”	24”	11-1/2”	82

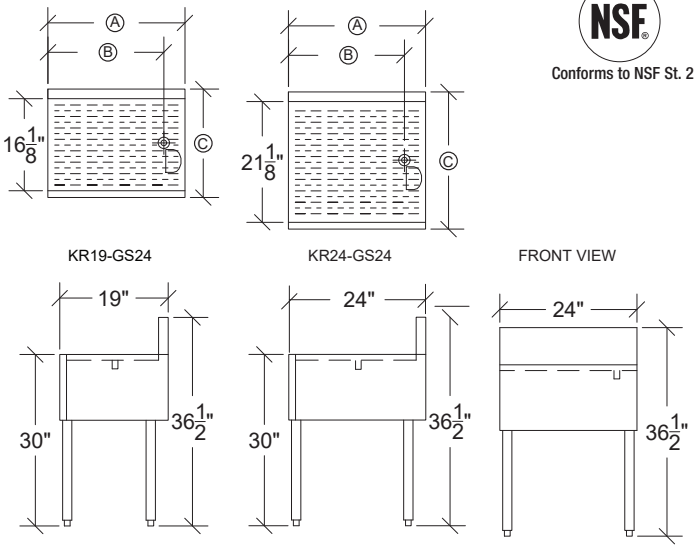

NSF
Conforms to NSF St. 2

Underbar Corner Drainboards

Model	Overall Length Ⓐ	Left Side to Drain Ⓑ	Depth Ⓒ	Back Side to Drain	Return End	Weight (lbs.)
KR19-C18L	18”	14”	19”	9-1/2”	Left	41
KR19-C18R	18”	14”	19”	9-1/2”	Right	41
KR24-C18R	18”	14”	24”	11-1/2”	Left	51
KR24-C18L	18”	14”	24”	11-1/2”	Right	51
KR19-C24R	24”	20”	19”	9-1/2”	Left	47
KR19-C24L	24”	20”	19”	9-1/2”	Right	47
KR24-C24R	24”	20”	24”	11-1/2”	Left	57
KR24-C24L	24”	20”	24”	11-1/2”	Right	57
KR19-C30R	30”	26”	19”	9-1/2”	Left	53
KR19-C30L	30”	26”	24”	11-1/2”	Right	53
KR24-C30R	30”	26”	19”	9-1/2”	Left	64
KR24-C30L	30”	26”	24”	11-1/2”	Right	64
KR19-C36R	36”	32”	19”	9-1/2”	Left	59
KR19-C36L	36”	32”	24”	11-1/2”	Right	59
KR24-C36R	36”	32”	19”	9-1/2”	Left	70
KR24-C36L	36”	32”	24”	11-1/2”	Right	70
KR19-C42R	42”	21”	19”	9-1/2”	Left	65
KR19-C42L	42”	21”	24”	11-1/2”	Right	65
KR24-C42R	42”	21”	19”	9-1/2”	Left	77
KR24-C42L	42”	21”	24”	11-1/2	Right	77
KR19-C48R	48”	24”	19”	9-1/2”	Left	71
KR19-C48L	48”	24”	24”	11-1/2”	Right	71
KR24-C48R	48”	24”	19”	9-1/2”	Left	85
KR24-C48L	48”	24”	24”	11-1/2”	Right	85

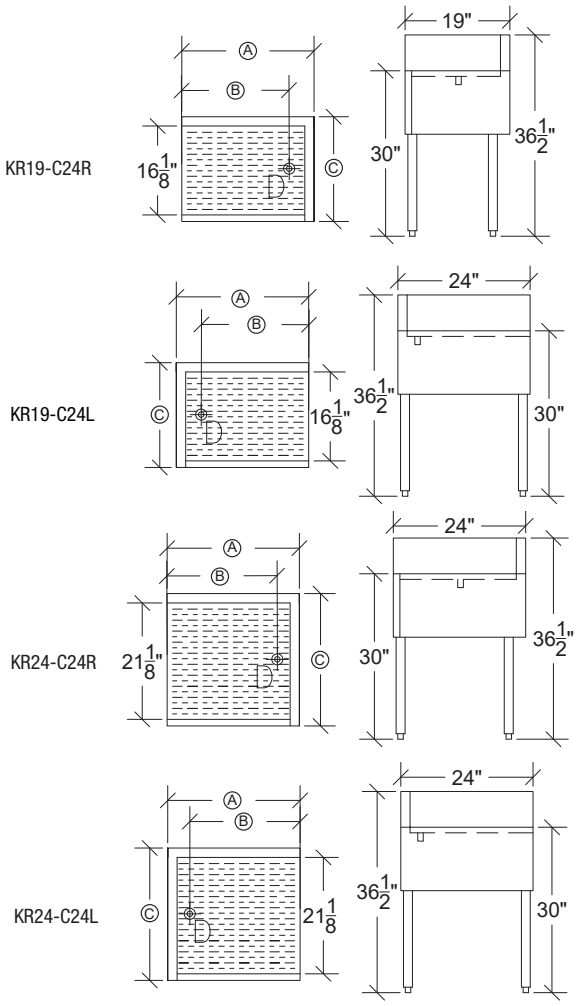

NSF
Conforms to NSF St. 2

Krowne Metal Corporation • 100 Haul Rd. Wayne, NJ 07470 • Toll Free: (800) 631-0442 • Fax: (973) 872-1129 • sales@krowne.com • krowne.com

Due to our commitment to continued product improvement, specifications are subject to change without notice.

Rev. 5/2020 • No. 5.245

Model: _____ **Item #:** _____ **Date:** _____

Project: _____ **Qty:** _____ **Approved By:** _____

Zero-Step Workstations

Refrigeration

KR24-MX68A-10

Standard Features

- Removable Garnish Station with integrated cover & pint cups
- Insulated Elixir section with stainless steel dividers & perforated bottom for ice separation
- Ice Bin dividers which allow for storage of different types of ice
- 5-Tier Liquor Display maximizes storage capacity
- Dump sink on all models
- Speedrail included
- Tool well with dipperwell faucet
- High performance speed rinser
- 24” front to back depth
- Ships in sections up to 7 ft.
- Available on stainless legs or modular bar die
- Built-in options available with Modular Bar Die: Junction box for outlets & LED lights

Models Without Cold Plates		Cold Plate Models										
Model (No Cold Plate)	Weight	Model With Cold Plate	Weight	Overall Length	Depth	Ice Bin Size	Ice Capacity	Garnish Cups	Elixir Bottles	Liquor Bottles	Ice Bin Dividers	Cold Plate
KR24-MX54	246	**KR24-MX54-7**	281	54”	24”	18”	69	5	10	17	0	7-Circuit
KR24-MX60	252	**KR24-MX60-10**	347	60”	24”	24”	92	6	10	19	1	10-Circuit
KR24-MX68A	239	**KR24-MX68A-10**	239	68"	24”	30"	115	8	15	26	2	10-Circuit
		KR24-MX68B-10	321	68"	24”	30"	115	8	10	26	2	10-Circuit
KR24-MX70	267	**KR24-MX70-10**	362	70”	24”	30”	115	8	10	27	2	10-Circuit
KR24-MX84	286	**KR24-MX84-10**	375	84"	24”	30"	115	6	15	30	2	10-Circuit

Note: Models with Cold Plates have the exact same dimensions as models without cold plates.

Specifications

Materials	▪ Interior, Front Apron & Backsplash: 20 gauge stainless steel ▪ Back & Bottom: 20 gauge galvanized steel ▪ Legs: 18 gauge stainless steel
Drains	▪ 1-1/2” IPS Drain, Sink bowl ▪ 1/2” NPS Drain, Dipperwell ▪ 1” NPS Drain, Elixer section ▪ 1” IPS Drain, Ice bin ▪ 1/2” IPS Drain, Ice bin with Cold Plate. 4” PVC tailpiece provided. PVC tailpiece required to avoid condensation through metal to metal contact.
Cold Plate	▪ Cast aluminum post mix plate with 7 or 10 circuits depending on model. Plate is sealed into bottom. Each circuit is 5/16” OD stainless steel tubing. Two full with remainder to be half circuits. Bump and swedge fittings on ends.

Backsplash	▪ 6-1/2”H x 1-1/2”D
Faucet	▪ 4” Center wall mount Royal Series faucet ▪ 1/4” turn ceramic cartridge valves ▪ 1/2” IPS Hot & Cold water
Dipperwell Faucet	▪ 1/2” IPS Cold
Cutting Board	▪ Non-slip flush mounted cutting board ▪ 11-1/2”W x 10”L
Speed Rinser	▪ 1/2” IPS Cold
Legs	▪ 1-5/8” tubular legs w/ grey plastic bullet foot
Sink Bowl	▪ 10”W x 12”L x 7”D

Cold Plate units supplied with 1/2” x 4” PVC tailpiece. 1/2”- 20 male threaded

Model KR-CPN4

Intertek
CONFORMS TO UL Std 471 & NSF STD 7

Certified to NSF/ANSI 61-G

Krowne Metal Corporation • 100 Haul Rd. Wayne, NJ 07470 • P: (800) 631-0442 • customerservice@krowne.com • krowne.com

Due to our commitment to continued product improvement, specifications are subject to change without notice.

Rev. 12/2021 • 6.1

Model: _____ **Item #:** _____ **Date:** _____

Project: _____ **Qty:** _____ **Approved By:** _____

Zero-Step Workstations

Refrigeration

KR24-MX54 or KR24-MX54-7

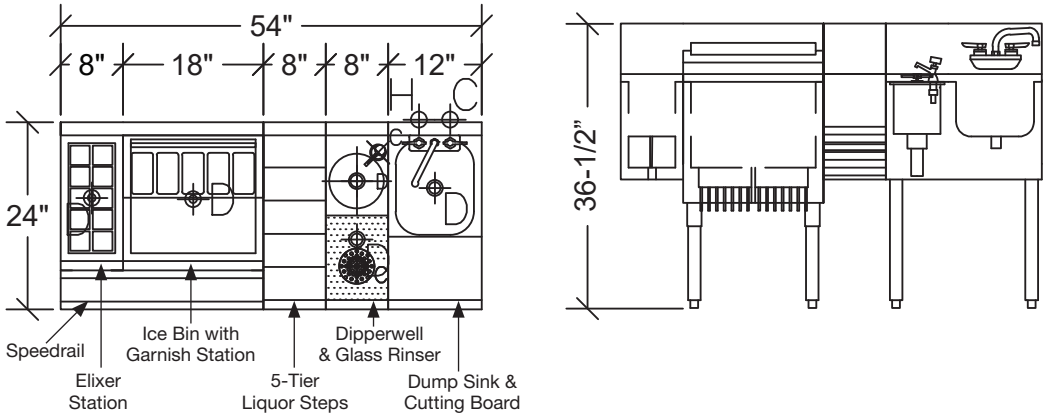

KR24-MX60 or KR24-MX60-10

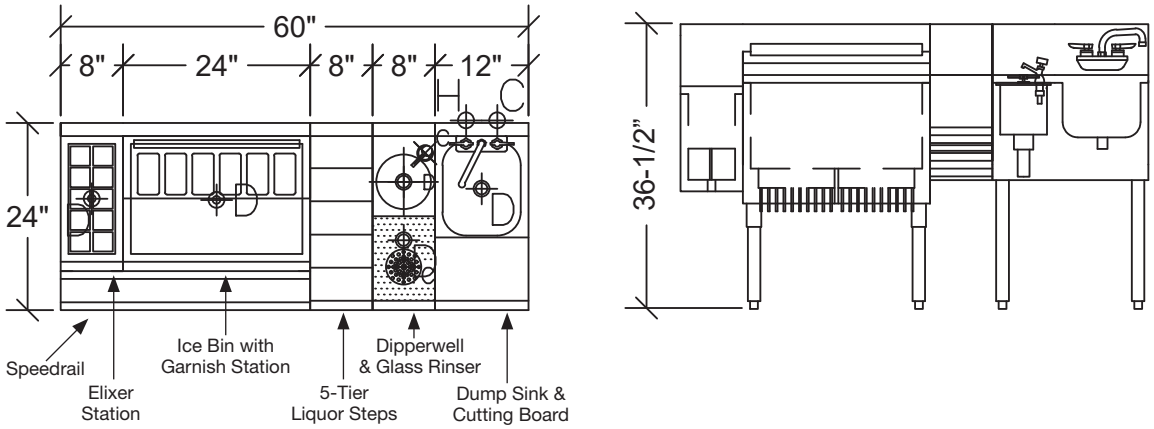

KR24-MX70 or KR24-MX70-10

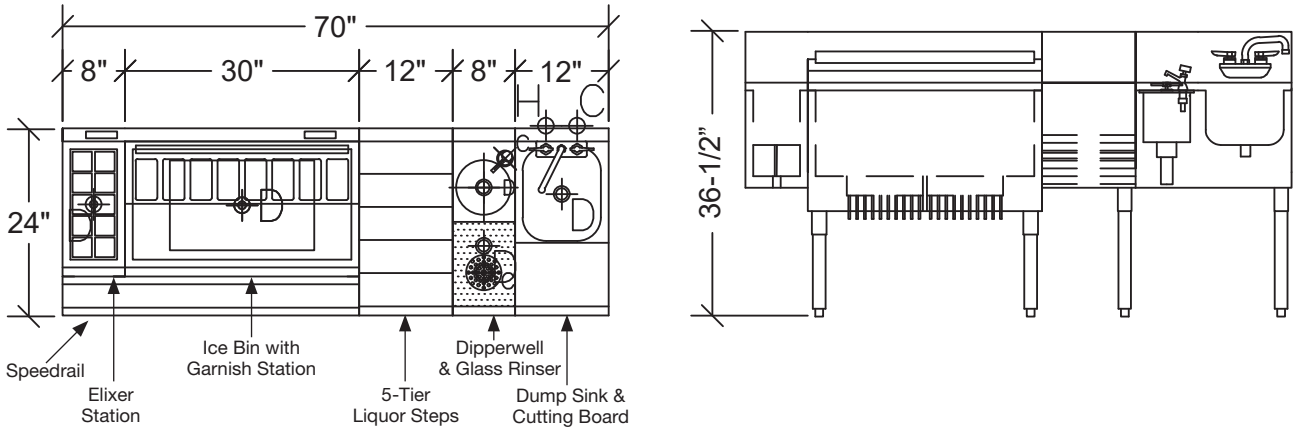

Krowne Metal Corporation • 100 Haul Rd. Wayne, NJ 07470 • P: (800) 631-0442 • customerservice@krowne.com • krowne.com

Due to our commitment to continued product improvement, specifications are subject to change without notice.

Rev. 12/2021 • 6.1

Model: _____ **Item #:** _____ **Date:** _____

Project: _____ **Qty:** _____ **Approved By:** _____

Zero-Step Workstations

Refrigeration

KR24-MX68A or KR24-MX68A-10

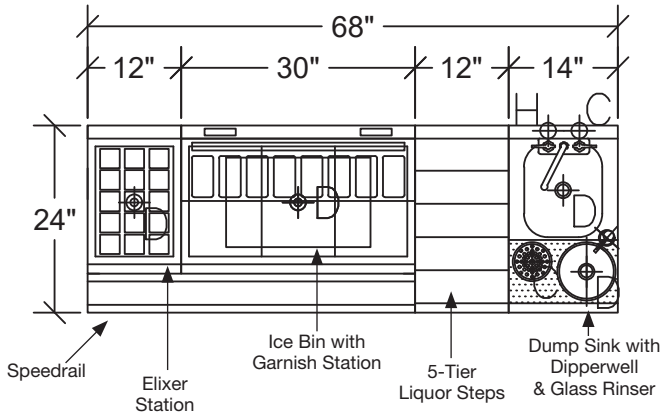

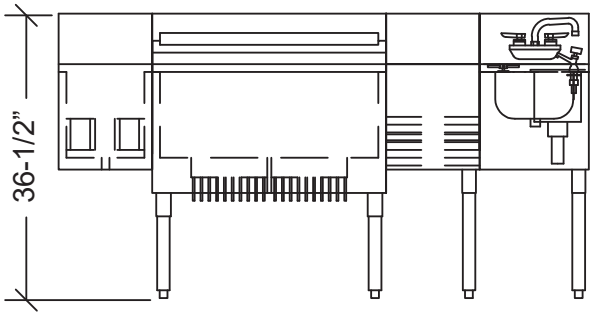

KR24-MX68B-10

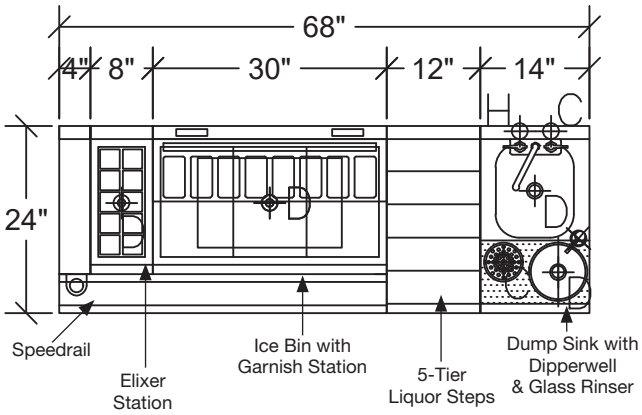

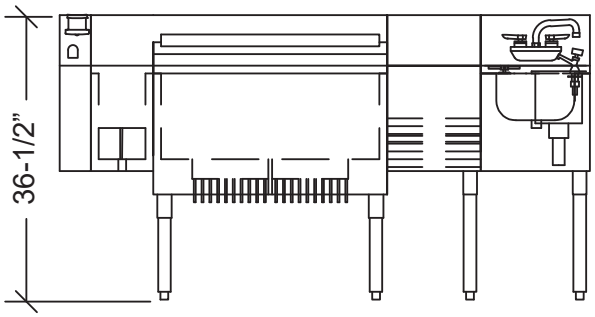

KR24-MX84 or KR24-MX84-10

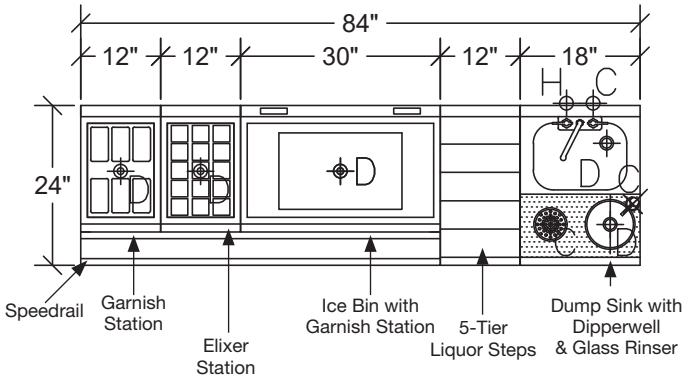

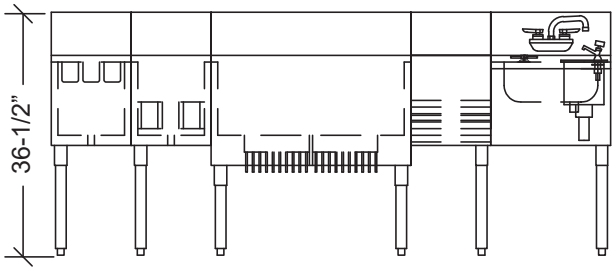

Krowne Metal Corporation • 100 Haul Rd. Wayne, NJ 07470 • P: (800) 631-0442 • customerservice@krowne.com • krowne.com

Due to our commitment to continued product improvement, specifications are subject to change without notice.

Rev. 12/2021 • 6.1

Glastender®

A family company manufacturing in the USA

www.glastender.com

Project: _____	AIA#
Item #: _____ Qty: _____	SIS#
Model #: _____	

Coolers, One Zone, Front Serviced, Low Profile

C1FL	C1FL32, C1FL36, C1FL52, C1FL60, C1FL72, C1FL84, C1FL92, C1FL108

C1FL60 with compressor left, stainless doors, and top

Configuration Highlight

Doors In Nine Finishes

Intertek
EP 5016978
Energy Performance Verified / Rendement Énergétique Vérifié

Intertek Intertek
4004503
Conforms to NSF/ANSI STD 7 and UL STD 471
Certified to CSA STD C22.2 No. 120
Listed to NSF Standard 7
for open food as a storage refrigerator

Standard Features

- Self-contained
- Locking door(s)
- LED interior lighting
- Heated mullion to minimize condensation
- Evaporator above compressor compartment to maximize storage capacity

Configurable Options

Temperature:
- Beer/Food - 34°F to 40°F
- White wine - 50°F to 55°F
- Red wine - 60°F to 65°F

Refrigeration Compartment Location:
- Left or Right

Refrigeration Compartment Cover Finish:
- Black vinyl-clad
- Stainless steel
- Jeweled stainless
- Laminated
- Unlaminated

Door Style & Finish:
- Black vinyl-clad
- Stainless steel
- Jeweled stainless
- Laminated
- Unlaminated
- Glass, black vinyl-clad
- Glass, stainless steel
- Glass, jeweled stainless
- Glass, laminated

Door Hinge Location *(specify for each door):*
- Left or Right

Door Handle:
- Signature
- Pull-tab
- Tube

Shelving *(specify per door section):*
- Two adjustable, coated-wire shelves
- Pull-out wine shelves:
  - » one upright and two horizontal storage combination
  - » five horizontal storage *(not available for the door next to the compressor compartment.)*

Top Style:
- No finished top
- Stainless top
- Laminated top
- Drainboard top

4" High Stainless Splashes *(can only be ordered with stainless top):*
- None
- Backsplash
- Left side splash
- Right side splash

Left and Right Side Finish:
- Black vinyl-clad
- Stainless steel
- Laminated

Back Finish:
- Galvanized steel
- Stainless steel

LED Lighting Style:
- Bright white (7,000k)
- Warm white (3,500k)
- Amber (2,700k)
- Blue

Glastender, Inc. • 5400 N Michigan Rd • Saginaw, MI • 48604-9780
989.752.4275 • 800.748.0423 • Fax 989.752.4444
www.glastender.com

Approval/Notes:

Specifications subject to change without notice. For current specifications please visit our website.

Coolers - One Zone, Front Serviced, Low Profile

Specifications

		C1FL32	C1FL36	C1FL52	C1FL60	C1FL72	C1FL84	C1FL92	C1FL108
Dimensions	Length	32”	36”	52”	60”	72”	84”	92”	108”
	Number of Sections	1	1	2	2	3	3	4	4
	Door Opening	16”	20”	16”	20”	16”	20”	16”	20”
Electrical	Electrical Supply	120V, 1 phase, 60 Hz, Dedicated 15 amp circuit is required							
	Full Load Amps	3.5				7			
	Plug Type	8 foot NEMA 5-15P grounded cord and plug which exits the back of refrigeration compartment*							
Refrigeration	Refrigerant	R290 - 125 grams, 3.88 oz., 0.24 pounds							
	Compressor	Reciprocating, 1/6 HP, 1300 BTUH, 0.11 Tons				Reciprocating, 1/4 HP, 2200 BTUH, 0.18 Tons			
	Heat Rejection	1430 BTUH	1430 BTUH	1430 BTUH	1430 BTUH	2867 BTUH	2867 BTUH	2867 BTUH	2867 BTUH
Operating Range		34°F (1°C) to 65°F (18°C)							
Plumbing		Automatic condensate evaporator; no drain connection required							
Weight Bearing Capacity		Countertops and other accessories should not exceed 500 pounds per door							

Materials
- Stainless steel parts include: exterior sub-top, interior, front of cabinet, hinges, hinge and lock brackets, and optional legs
- Black vinyl-clad steel parts include: standard sides, doors and compressor cover
- Galvanized steel parts include: back and bottom
- Zinc plated CR steel parts include: leg sockets

Plumbing
- Optional drainboard top 1/2” ID drain line stubs out beneath the compressor compartment; field connection required

5-15P

Capacities

		C1FL32	C1FL36	C1FL52	C1FL60	C1FL72	C1FL84	C1FL92	C1FL108
	12 oz. bottles, cases	3.8	5.2	8.8	11.5	14.0	18.0	19.2	24.5
	750ml wine bottles	30	42	72	84	114	132	156	180
	1/2 barrel kegs	N/A	N/A	N/A	N/A	N/A	N/A	N/A	N/A
	1/6 barrel kegs	N/A	N/A	N/A	N/A	N/A	N/A	N/A	N/A
	Capacity values below are per door/drawer section (750ml wine bottles)								
Next to compressor	Drawers	N/A	N/A	N/A	N/A	N/A	N/A	N/A	N/A
	Upright pull-out	N/A	N/A	N/A	N/A	N/A	N/A	N/A	N/A
	Horizontal pull-out	N/A	N/A	N/A	N/A	N/A	N/A	N/A	N/A
	Combination pull-out	36	52	36	52	36	52	36	52
Not next to compressor	Drawers	N/A	N/A	N/A	N/A	N/A	N/A	N/A	N/A
	Upright pull-out	N/A	N/A	N/A	N/A	N/A	N/A	N/A	N/A
	Horizontal pull-out	30	40	30	40	30	40	30	40
	Combination pull-out	36	52	36	52	36	52	36	52

Glastender®
5400 N Michigan Rd • Saginaw, MI • 48604-9780
989.752.4275 • 800.748.0423 • Fax 989.752.4444
www.glastender.com

Printed in USA

Coolers - One Zone, Front Serviced, Low Profile

Drawings

PLAN VIEWS

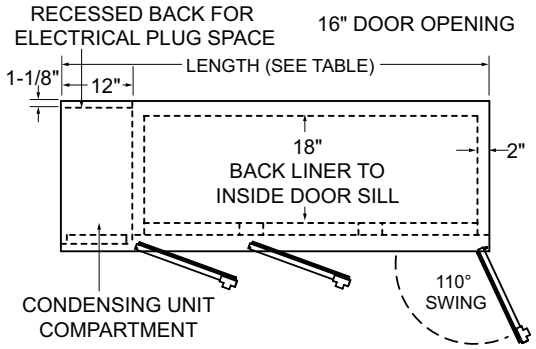

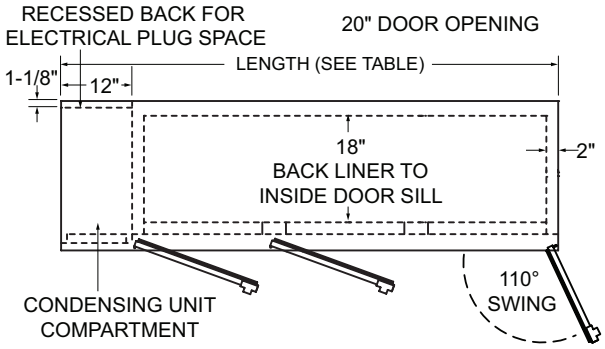

FRONT VIEWS

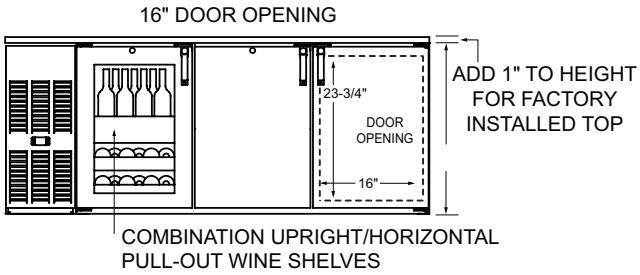

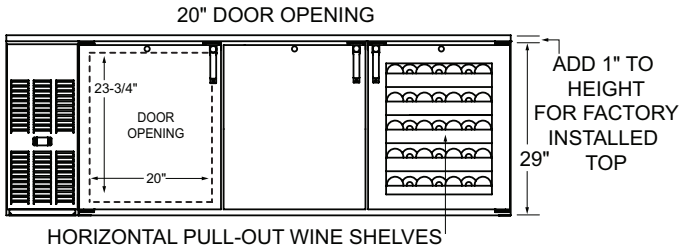

SIDE VIEWS

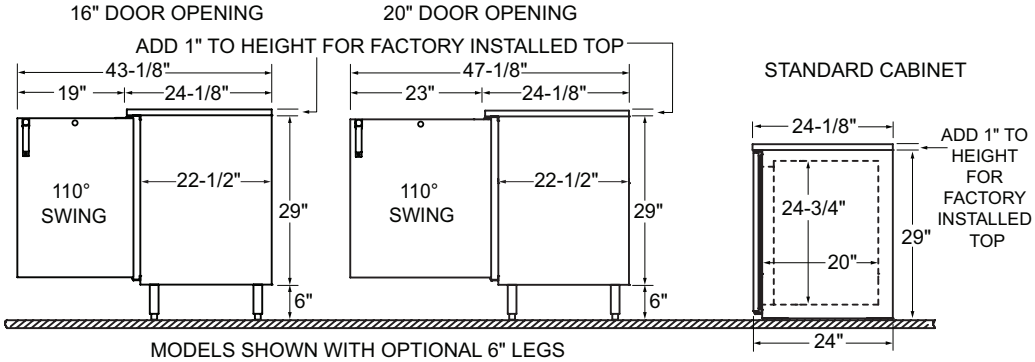

OPTIONAL LEGS AND CASTERS

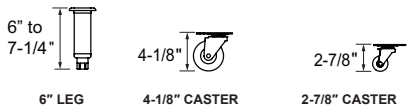

Glastender®
5400 N Michigan Rd • Saginaw, MI • 48604-9780
989.752.4275 • 800.748.0423 • Fax 989.752.4444
www.glastender.com

Printed in USA

Model: _____ **Item #:** _____ **Date:** _____

Project: _____ **Qty:** _____ **Approved By:** _____

Zero-Step Workstations

Refrigeration

KR24-MX68A-10

Standard Features

- Removable Garnish Station with integrated cover & pint cups
- Insulated Elixir section with stainless steel dividers & perforated bottom for ice separation
- Ice Bin dividers which allow for storage of different types of ice
- 5-Tier Liquor Display maximizes storage capacity
- Dump sink on all models
- Speedrail included
- Tool well with dipperwell faucet
- High performance speed rinser
- 24” front to back depth
- Ships in sections up to 7 ft.
- Available on stainless legs or modular bar die
- Built-in options available with Modular Bar Die: Junction box for outlets & LED lights

Models Without Cold Plates		Cold Plate Models										
Model (No Cold Plate)	Weight	Model With Cold Plate	Weight	Overall Length	Depth	Ice Bin Size	Ice Capacity	Garnish Cups	Elixir Bottles	Liquor Bottles	Ice Bin Dividers	Cold Plate
KR24-MX54	246	**KR24-MX54-7**	281	54”	24”	18”	69	5	10	17	0	7-Circuit
KR24-MX60	252	**KR24-MX60-10**	347	60”	24”	24”	92	6	10	19	1	10-Circuit
KR24-MX68A	239	**KR24-MX68A-10**	239	68"	24”	30"	115	8	15	26	2	10-Circuit
		KR24-MX68B-10	321	68"	24”	30"	115	8	10	26	2	10-Circuit
KR24-MX70	267	**KR24-MX70-10**	362	70”	24”	30”	115	8	10	27	2	10-Circuit
KR24-MX84	286	**KR24-MX84-10**	375	84"	24”	30"	115	6	15	30	2	10-Circuit

Note: Models with Cold Plates have the exact same dimensions as models without cold plates.

Specifications

Materials	▪ Interior, Front Apron & Backsplash: 20 gauge stainless steel ▪ Back & Bottom: 20 gauge galvanized steel ▪ Legs: 18 gauge stainless steel
Drains	▪ 1-1/2” IPS Drain, Sink bowl ▪ 1/2” NPS Drain, Dipperwell ▪ 1” NPS Drain, Elixer section ▪ 1” IPS Drain, Ice bin ▪ 1/2” IPS Drain, Ice bin with Cold Plate. 4” PVC tailpiece provided. PVC tailpiece required to avoid condensation through metal to metal contact.
Cold Plate	▪ Cast aluminum post mix plate with 7 or 10 circuits depending on model. Plate is sealed into bottom. Each circuit is 5/16” OD stainless steel tubing. Two full with remainder to be half circuits. Bump and swedge fittings on ends.

Backsplash	▪ 6-1/2”H x 1-1/2”D
Faucet	▪ 4” Center wall mount Royal Series faucet ▪ 1/4” turn ceramic cartridge valves ▪ 1/2” IPS Hot & Cold water
Dipperwell Faucet	▪ 1/2” IPS Cold
Cutting Board	▪ Non-slip flush mounted cutting board ▪ 11-1/2”W x 10”L
Speed Rinser	▪ 1/2” IPS Cold
Legs	▪ 1-5/8” tubular legs w/ grey plastic bullet foot
Sink Bowl	▪ 10”W x 12”L x 7”D

Cold Plate units supplied with 1/2” x 4” PVC tailpiece. 1/2”- 20 male threaded

Model KR-CPN4

Intertek
CONFORMS TO UL Std 471 & NSF STD 7

Certified to NSF/ANSI 61-G

Krowne Metal Corporation • 100 Haul Rd. Wayne, NJ 07470 • P: (800) 631-0442 • customerservice@krowne.com • krowne.com

Due to our commitment to continued product improvement, specifications are subject to change without notice.

Rev. 12/2021 • 6.1

Model: _____ **Item #:** _____ **Date:** _____

Project: _____ **Qty:** _____ **Approved By:** _____

Zero-Step Workstations

Refrigeration

KR24-MX54 or KR24-MX54-7

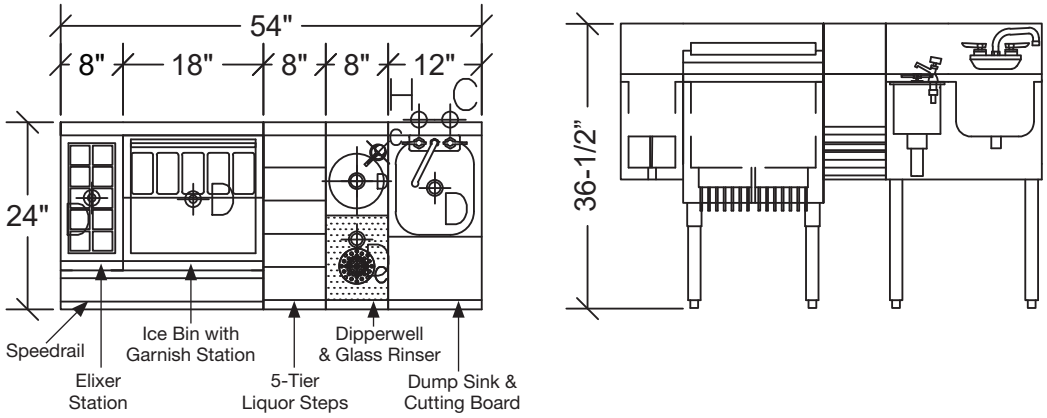

KR24-MX60 or KR24-MX60-10

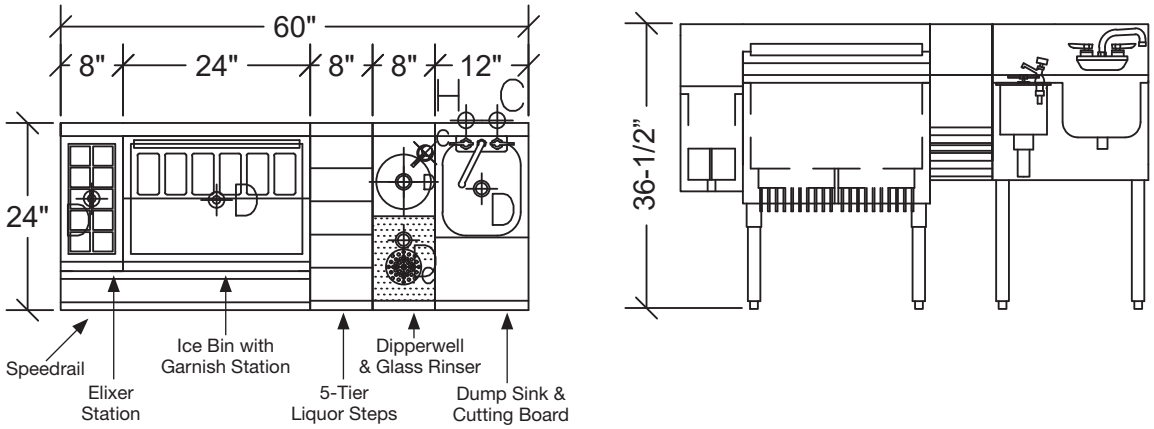

KR24-MX70 or KR24-MX70-10

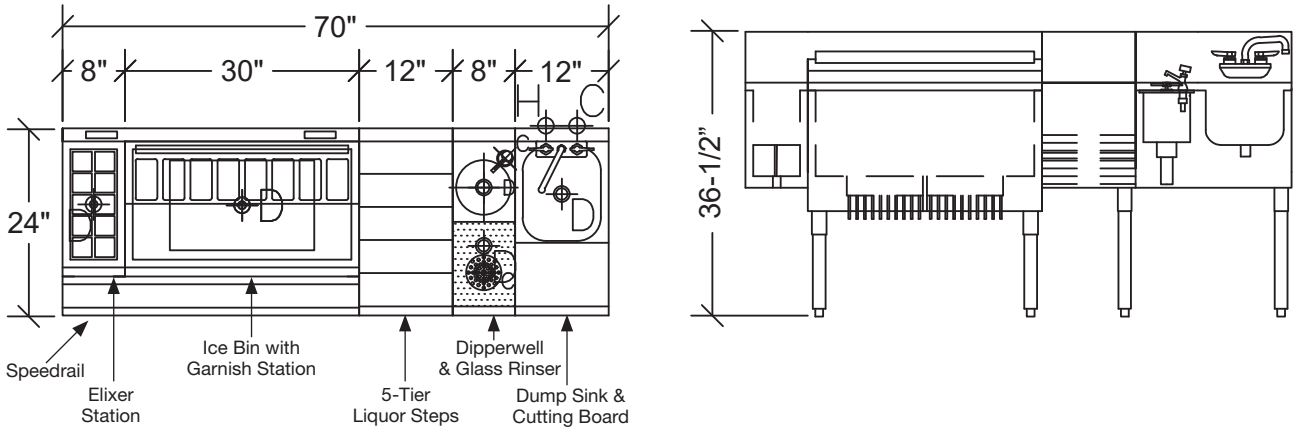

Krowne Metal Corporation • 100 Haul Rd. Wayne, NJ 07470 • P: (800) 631-0442 • customerservice@krowne.com • krowne.com

Due to our commitment to continued product improvement, specifications are subject to change without notice.

Rev. 12/2021 • 6.1

Model: _____ **Item #:** _____ **Date:** _____

Project: _____ **Qty:** _____ **Approved By:** _____

Zero-Step Workstations

Refrigeration

KR24-MX68A or KR24-MX68A-10

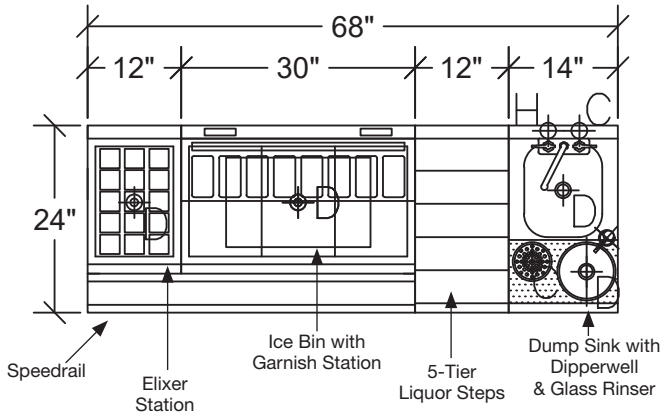

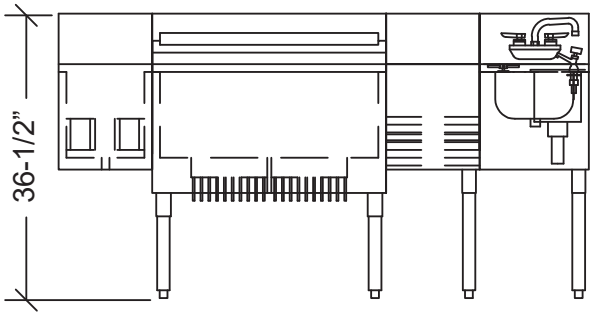

KR24-MX68B-10

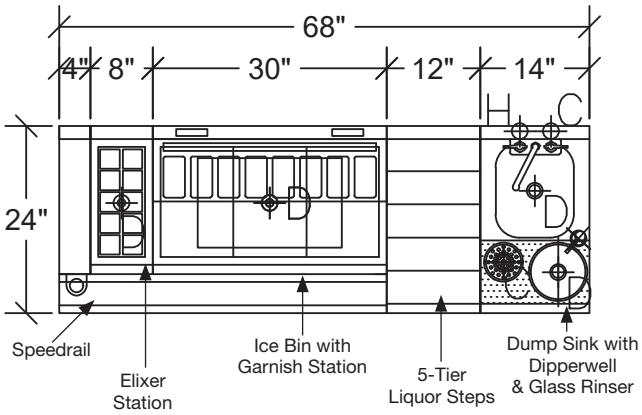

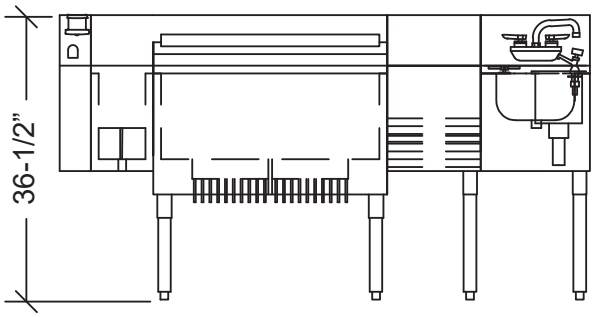

KR24-MX84 or KR24-MX84-10

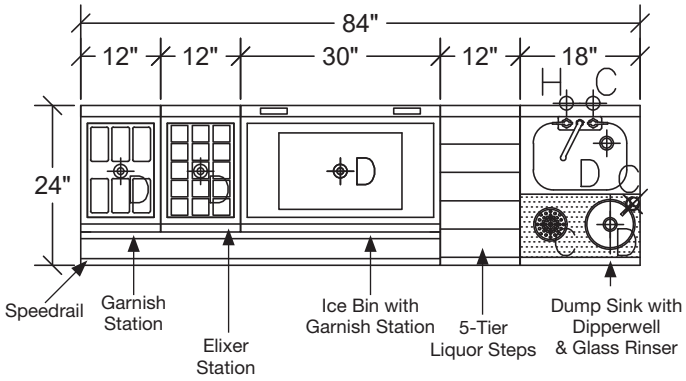

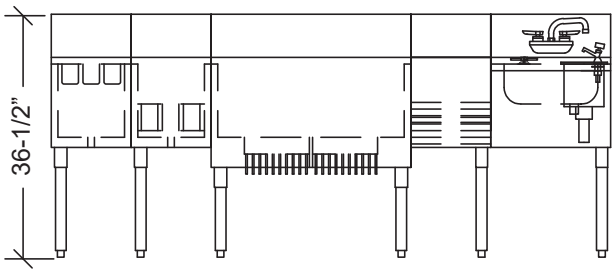

Krowne Metal Corporation • 100 Haul Rd. Wayne, NJ 07470 • P: (800) 631-0442 • customerservice@krowne.com • krowne.com

Due to our commitment to continued product improvement, specifications are subject to change without notice.

Rev. 12/2021 • 6.1

Model:_____ Item #:_____ Date:_____

Project:_____ Qty:_____ Approved By:_____

Underbar Drainboards & Corner Drainboards

ROYAL SERIES

KR19-GS30 SHOWN

KR24-C24R SHOWN

Standard Features

- **Drainboard**
  20 gauge embossed stainless steel reinforced with welded braces every 6 inches. $^3/_4$" radius on all vertical and horizontal edges
- **Front Apron**
  20 gauge stainless steel clad over 20 gauge galvanized steel
- **Sides**
  20 gauge stainless steel
- **Backsplash**
  20 gauge stainless steel
- **Back and Bottom**
  20 gauge stainless steel
- **Legs**
  1 $^5/_8$" tubular 16 gauge stainless steel with grey plastic bullet foot
- **Plumbing**
  1" IPS drain connection

Optional Accessories

KR-201 4" x 4" Chase for Beer/Soda Lines
KR-203 $^3/_4$" x 3 $^1/_2$" Soda Line Cutout in Backsplash
KR-204 3 $^1/_2$" Round Cutout for Soda/Beer Lines in Drainboard
KR-301 Right End Return (Corner)
KR-302 Left End Return (Corner)
KR-310 Right End Splash for KR19
KR-303 Right and Left End Splash for KR19
KR-311 Left End Splash for KR19
KR-313 Left and Right Side Splash for KR24
KR-314 Right End Side Splash for KR24
KR-315 Left End Side Splash for KR24
KR-401 Cap Catcher and Bottle Opener
RS-"XX" Sound Deadened Single Speedrail ("XX" indicates size)
RD-"XX" Sound Deadened Double Speedrail ("XX" indicates size)

NSF
Conforms to NSF St. 2

Krowne Metal Corporation • 100 Haul Rd. Wayne, NJ 07470 • Toll Free: (800) 631-0442 • Fax: (973) 872-1129 • sales@krowne.com • krowne.com

Due to our commitment to continued product improvement, specifications are subject to change without notice.

Rev. 5/2020 • No. 5.245

Model:_____ Item #:_____ Date:_____

Project:_____ Qty:_____ Approved By:_____

Underbar Drainboards & Corner Drainboards

ROYAL SERIES

Underbar Drainboards

Model	Overall Length Ⓐ	Left Side to Drain Ⓑ	Depth Ⓒ	Back Side to Drain	Weight (lbs.)
KR19-GS12	12”	6”	19”	9-1/2”	38
KR24-GS12	12”	6”	24”	11-1/2”	43
KR19-GS18	18”	14”	19”	9-1/2”	44
KR24-GS18	18”	14”	24”	11-1/2”	49
KR19-GS24	24”	20”	19”	9-1/2”	50
KR24-GS24	24”	20”	24”	11-1/2”	55
KR19-GS30	30”	26”	19”	9-1/2”	56
KR24-GS30	30”	26”	24”	11-1/2”	61
KR19-GS36	36”	32”	19”	9-1/2”	62
KR24-GS36	36”	32”	24”	11-1/2”	68
KR19-GS42	42”	21”	19”	9-1/2”	68
KR24-GS42	42”	21”	24”	11-1/2”	75
KR19-GS48	48”	24”	19”	9-1/2”	74
KR24-GS48	48”	24”	24”	11-1/2”	82

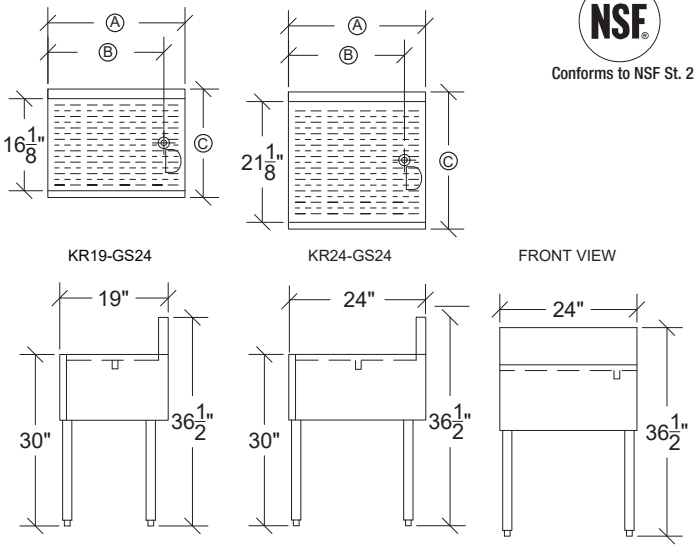

NSF
Conforms to NSF St. 2

Underbar Corner Drainboards

Model	Overall Length Ⓐ	Left Side to Drain Ⓑ	Depth Ⓒ	Back Side to Drain	Return End	Weight (lbs.)
KR19-C18L	18”	14”	19”	9-1/2”	Left	41
KR19-C18R	18”	14”	19”	9-1/2”	Right	41
KR24-C18R	18”	14”	24”	11-1/2”	Left	51
KR24-C18L	18”	14”	24”	11-1/2”	Right	51
KR19-C24R	24”	20”	19”	9-1/2”	Left	47
KR19-C24L	24”	20”	19”	9-1/2”	Right	47
KR24-C24R	24”	20”	24”	11-1/2”	Left	57
KR24-C24L	24”	20”	24”	11-1/2”	Right	57
KR19-C30R	30”	26”	19”	9-1/2”	Left	53
KR19-C30L	30”	26”	24”	11-1/2”	Right	53
KR24-C30R	30”	26”	19”	9-1/2”	Left	64
KR24-C30L	30”	26”	24”	11-1/2”	Right	64
KR19-C36R	36”	32”	19”	9-1/2”	Left	59
KR19-C36L	36”	32”	24”	11-1/2”	Right	59
KR24-C36R	36”	32”	19”	9-1/2”	Left	70
KR24-C36L	36”	32”	24”	11-1/2”	Right	70
KR19-C42R	42”	21”	19”	9-1/2”	Left	65
KR19-C42L	42”	21”	24”	11-1/2”	Right	65
KR24-C42R	42”	21”	19”	9-1/2”	Left	77
KR24-C42L	42”	21”	24”	11-1/2	Right	77
KR19-C48R	48”	24”	19”	9-1/2”	Left	71
KR19-C48L	48”	24”	24”	11-1/2”	Right	71
KR24-C48R	48”	24”	19”	9-1/2”	Left	85
KR24-C48L	48”	24”	24”	11-1/2”	Right	85

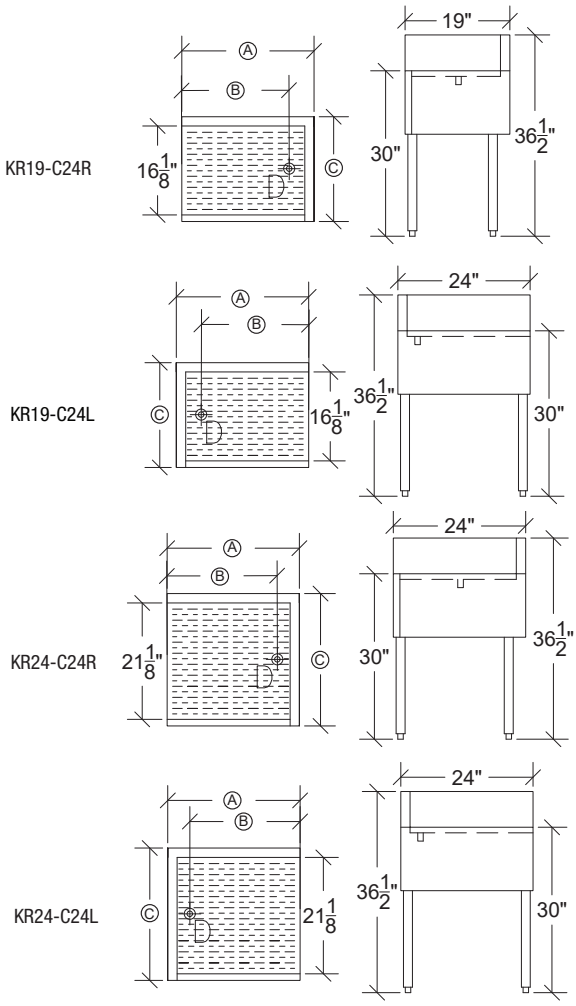

NSF
Conforms to NSF St. 2

Krowne Metal Corporation • 100 Haul Rd. Wayne, NJ 07470 • Toll Free: (800) 631-0442 • Fax: (973) 872-1129 • sales@krowne.com • krowne.com

Due to our commitment to continued product improvement, specifications are subject to change without notice.

Rev. 5/2020 • No. 5.245

Model: _____ Item #: _____ Date: _____

Project: _____ Qty: _____ Approved By: _____

Self-Contained Back Bar Refrigeration

Refrigeration

BS60-KSS-LR

Standard Features

- 35” High without Top, 36” High with 1” Optional Top
- 24” Front to Back Depth (25” with Top)
- Coved corner stainless steel interior
- Heavy duty Self-Closing 24”W Doors
- Stainless steel door handles with built-in locks
- Digital thermostat
- Built-in Cool White LED Lighting (7000K)
- DynamicChill 360° Technology
- Heated mullion to minimize condensation
- Approved for NSF 7 Open Food Storage
- Pre-drilled bottom for optional legs or casters (uses 1/4-20 self tapping 1/2”L screw)
- Eco-friendly Refrigerant and Insulation
- 5-Year Compressor Warranty
- 1-Year Parts & Labor Warranty

Models

Model	Length	Doors	Weight	Amps	HP
BS36	36”	1-Door	285 lbs.	1.7	1/5
BS60	60”	2-Door	360 lbs.	2.2	1/4
BS84	84”	3-Door	480 lbs.	2.7	1/3
BS108	108”	4-Door	525 lbs.	2.8	1/3

Case Capacity

Model	BS36 (36”)	BS60 (60”)	BS84 (84”)	BS108 (108”)
Long Neck Bottles	7.5	15.5	24	30
12 oz Cans	10	20	34	40
Wine Bottles (ea)	72	162	248	288

DUAL ZONE TEMPERATURE CONTROL*

Model	Description
RB-STAT	Red Wine, 60°F-65°F and Beer, 30°F-40°F
RW-STAT	Red Wine, 60°F-65°F and White Wine, 50°F-55°F

*Only available on 60”, 84” and 108” units

Eco-Friendly Refrigerant

Intertek 4003355

Intertek CONFORMS TO UL Std 471 & NSF STD 7

This equipment is intended for the storage and display of non-potentially hazardous bottle or canned products only.

Specifications

Electrical	▪ 115 V, 1 Phase, 60 Hz ▪ Furnished with 8’-0” plug-in cord, which exits left or right rear of cooler ▪ NEMA 5-15P plug configuration ▪ Dedicated 15 amp circuit recommended ▪ 1 Door Units (36”): 1.7 amps, 1/5 HP ▪ 2 Door Units (60”): 2.2 amps, 1/4 HP ▪ 3 Door Units (84”): 2.7 amps, 1/3 HP ▪ 4 Door Units (108”): 2.8 amps, 1/3 HP
Refrigeration	▪ R290 Hydrocarbon Refrigerant ▪ 30°F - 40°F operating range ▪ Digital thermostat on front grille
Plumbing	▪ No drain required ▪ Condensate evaporator pan included
Insulation	▪ 2” thick foamed-in-place polyurethane
Interior	▪ 20 gauge stainless steel walls with coved corners ▪ NSF epoxy coated durable shelves - one bottom and two adjustable shelves per door
Exterior	▪ Sides: 20 gauge stainless steel ▪ Front: 20 gauge stainless steel ▪ Back: 20 gauge galvanized steel ▪ Top: 20 gauge galvanized steel with option of 1” stainless steel top
Doors	▪ Self-closing 24”W doors available in black vinyl, stainless steel, glass with black vinyl, or glass with stainless steel ▪ 19-3/4”W x 29-11/16”H door opening

Krowne Metal Corporation • 100 Haul Rd. Wayne, NJ 07470 • P: (800) 631-0442 • customerservice@krowne.com • krowne.com

Due to our commitment to continued product improvement, specifications are subject to change without notice.

Rev. 1/2022 • 1.3

Model: _____ **Item #:** _____ **Date:** _____

Project: _____ **Qty:** _____ **Approved By:** _____

Self-Contained Back Bar Refrigeration

Refrigeration

One Door (36”)

Models beginning BS36

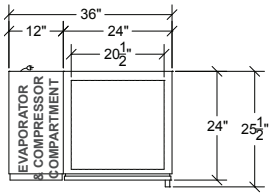

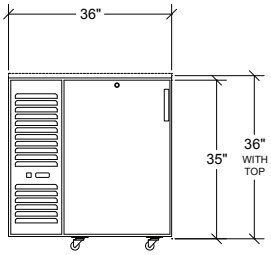

Two Door (60”)

Models beginning BS60

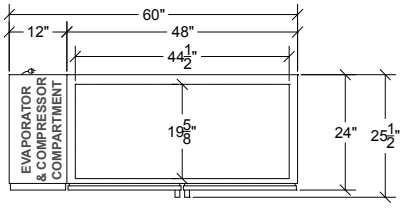

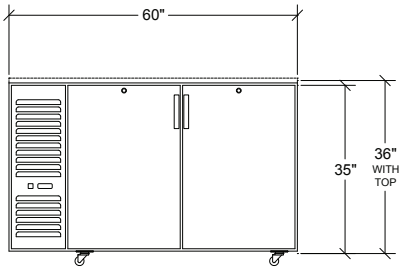

Standard Door Side View

Applies to all Models

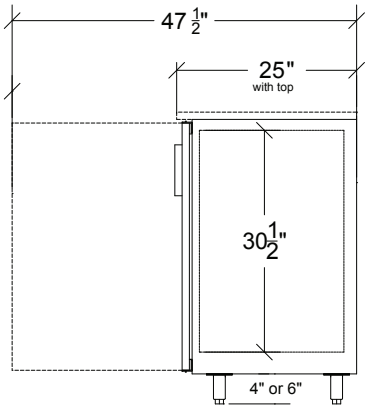

Three Door (84”)

Models beginning BS84

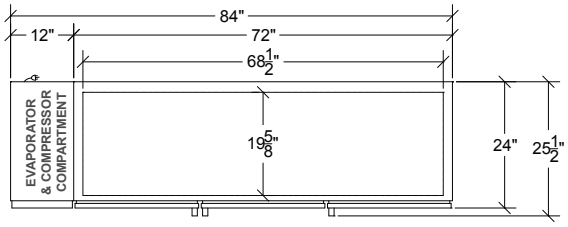

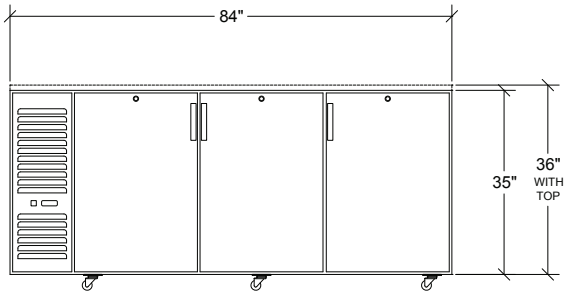

Four Door (108”)

Models beginning BS108

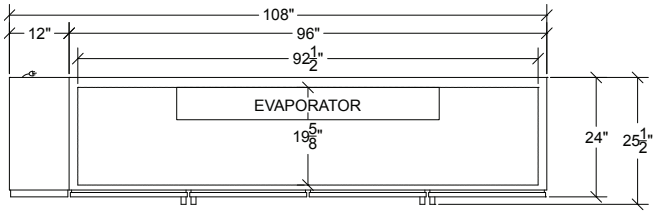

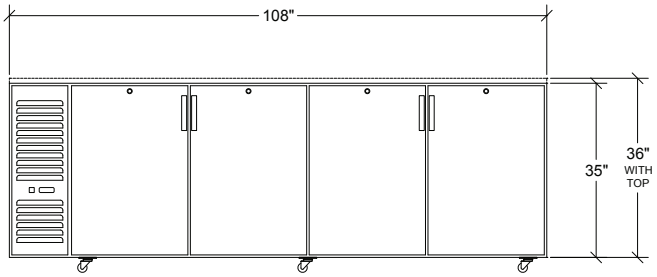

Note: Optional casters raise height 1” higher than wheel size
Note: Optional 4” or 6” legs available

Krowne Metal Corporation • 100 Haul Rd. Wayne, NJ 07470 • P: (800) 631-0442 • customerservice@krowne.com • krowne.com

Due to our commitment to continued product improvement, specifications are subject to change without notice.

Rev. 1/2022 • 1.3

SECTION 233439 - DIRECT DRIVE HIGH VOLUME, LOW SPEED (HVLS) OVERHEAD FANS

PART I GENERAL

1.1 SUMMARY

A. Section Includes: Low Speed, Small Diameter (LSSD) Overhead Fans
B. Related Sections:
   1. 01 00 00 General Requirements
   2. 07 00 00 Thermal and Moisture Protection
   3. 09 00 00 Finishes
   4. 23 00 00 Heating, Ventilating, and Air-Conditioning (HVAC)
   5. 26 00 00 Electrical

1.2 REFERENCES

A. American National Standards Institute (ANSI):
   1. 11-r1999 - Method of Evaluating Load Ratings of Bearings
B. American Society of Civil Engineers (ASCE):
   1. 7-02 - Minimum Design Loads for Building and Other Structures
C. American Society of Heating, Refrigerating and Air Conditioning Engineers, Inc. (ASHRAE):
   1. Chapter 45 - 2003 Handbook, HVAC Applications
   2. Chapter 7 - 2001 Fundamentals handbook, Sound-Vibration
   3. Chapter 32 - 2001 Fundamentals handbook, Duct Design
   4. Chapter 18 - 1992 HVAC System and Equipment handbook, Fans
D. American Society for Testing and Materials (ASTM):
   1. E330-02 - Standard Test Method for Structural Performance of Exterior Windows, Doors, Skylight and Curtain Walls by Uniform Static Air Pressure Difference
E. National Fire Protection Association (NFPA)
   1. 13 - Standard for the Installation of Sprinkler Systems
   2. 70 - National Electrical Code
   3. 72 - National Fire Alarm and Signaling Code
   4. 90A-02 - Standard for the Installation of Air-Conditioning and Ventilating Systems
F. Occupational Safety and Health Administration (OSHA):
   1. 1910.212 - General requirements for Machine Guarding
   2. 1910.219 - General requirements for guarding safe use of mechanical power transmission apparatus
   3. 1926.300 - General requirements for safe operation and maintenance of hand and power tools
G. Underwriters Laboratories (UL):
   1. 507 - Electric Fans

1.3 SUBMITTALS

A. General: Submit in accordance with Section 01 33 00 Submittal Procedures.
B. Provide dimensional drawings and product data on each fan.
C. Provide fan curves for each fan at the specified operation point, with the flow and fan RPM clearly plotted.
D. Provide A-weighted total sound pressure levels in decibels for each fan.
E. Strictly adhere to QUALITY ASSURANCE requirements as stated in section 1.4 of this specification.
F. Provide manufacturer's certification that Low Speed, Small Diameter (LSSD) overhead fans are licensed to bear the ENERGY STAR Seal.

G. Installation, Operation, and Maintenance Manual (IOM): Provide manufacturer's installation, operation, and maintenance manual, including instructions on installation, operation, maintenance, receiving, handling, storage, and cleaning. A troubleshooting guide, parts list, safety information and electrical wiring diagrams shall also be included.

1.4 QUALITY ASSURANCE

A. Performance ratings shall conform to ENERGY STAR program requirements. Fans must be tested in accordance with ENERGY STAR ceiling fan test manual in an accredited laboratory. Fans shall be licensed to bear the ENERGY STAR Seal.
B. Entire fan assembly shall be UL/cUL-Listed to Underwriters Laboratory (UL) Standard 507 and CSA Standard 22.2 No. 113 to ensure compliance with the most current international testing standards. Intertek/ETL certification to UL Standard 507 and CSA Standard 22.2 No. 113 shall not be accepted.
C. Fan controls shall comply with the National Electrical Code (NEC).
D. Good workmanship shall be evident in all aspects of the fan's construction.
E. All fan motors and variable frequency drives (VFDs) shall be factory-tested prior to shipment.

1.5 DELIVERY, STORAGE, AND HANDLING

A. Delivery: Deliver materials to site in manufacturer's original, unopened containers and packaging, with labels clearly indicating manufacturer, material, products included, and location of installation.
B. Storage: Store materials in a dry area indoor, protected from damage, and in accordance with manufacturer's instructions. For long term storage follow manufacturer's Installation, Operation, and Maintenance Manual.
C. Handling: Handle and lift fans in accordance with the manufacturer's instructions. Protect materials and finishes during handling and installation to prevent damage. Follow all safety warnings posted by the manufacturer.

1.6 WARRANTY

A. Manufacturer's Warranty: Submit, for Owner's acceptance, manufacturer's standard warranty document executed by authorized company official. Manufacturer's warranty is in addition to, and not a limitation of, other rights Owner may have under Contract Documents.
   1. The warranty of this equipment is to be free from defects in material and workmanship for a period of ten years from the purchase date. Any units or parts which prove defective during the warranty period will be replaced at the Manufacturer's option when returned to Manufacturer, transportation prepaid.
   2. Motor and variable frequency drive (VFD) are warranted by the motor & VFD manufacturer for a period of three years.

1.7 MAINTENANCE

A. Refer to Manufacturer's Installation, Operation and Maintenance Manual (IOM), to find maintenance procedures.

PART II PRODUCTS

2.1 MANUFACTURER

A. Basis of Design: Greenheck, PO Box 410, Schofield, Wisconsin 54476. Phone (715) 359-6171. Fax (715)355-2399. Website: www.greenheck.com
B. Product Substitutions: Subject to compliance with requirements, provide products that are Architect approved equals.

2.2 DIRECT DRIVE LOW SPEED, SMALL DIAMETER (LSSD) OVERHEAD FANS GREENHECK MODEL AMPLIFY™ DC-5 (FAN SIZES 4-7, 52-84 IN. DIAMETERS)

A. General Description:
1. Low Speed, Small Diameter (LSSD) overhead fans shall be licensed to bear the ENERGY STAR Seal to ensure performance as cataloged in the field. Unlicensed overhead fans shall not be accepted.
2. Entire fan assembly shall be UL/cUL-Listed to Underwriters Laboratory (UL) Standard 507 and CSA Standard 22.2 No. 113 to ensure compliance with the most current international testing standards. Intertek/ETL certification to UL Standard 507 and CSA Standard 22.2 No. 113 shall not be accepted.
3. Entire fan assembly shall be ENERGY STAR Certified for air performance and fan efficiency.
4. Fans are available in four sizes with nominal impeller diameters ranging from 52 inches through 84 inches (4.3-7 feet; 4-7 nominal fan sizes).
5. Performance capabilities up to 15,108 cubic feet per minute (cfm).
6. Maximum continuous operating temperature of 104° Fahrenheit (40° Celsius).
7. Designed for forward (counter-clockwise when viewed from floor) and reverse (clockwise when viewed from floor) operation capabilities, for comfort cooling and destratification applications.
8. Each fan shall bear a permanently affixed manufacturer's Mylar nameplate containing the model number, individual serial number, and electrical requirements of the fan.

B. Impeller:
1. Impeller shall be constructed of aerodynamic 6005A-T6 extruded aluminum airfoil blades connected to a single-piece, cast aluminum hub for structural strength. Multi-piece hubs and plastic, resin, or wooden airfoil blades shall not be permitted. All connections shall be made using a minimum of SAE Grade 5 hardware.
2. Airfoil blades shall be fastened internally in the hub assembly with the fasteners hidden from the exterior of the fan.
3. Airfoil blades shall be provided with a mill aluminum finish as standard. Optional finishes shall include industrial powder coatings, anodize finishes, wood grain finishes, or custom color matched coatings.
4. Airfoil blades shall be optimized for maximum airflow, fan efficiency, and coverage area.
5. Airfoil blades shall be internally reinforced to minimize blade deflection while the fan is in standby or in operation. Blade deflection shall not exceed ±0.1 inches in either situation.
6. Airfoil blades shall be designed for minimal weight in order to maximize fan efficiency. Individual blade weight shall not exceed 3 pounds.
7. Impeller hub shall be secured to the face of the motor by a minimum of 5 bolts. Impeller hub shall also be connected to the building structure via a safety restraint cable and hub retaining ring.

C. Motor:
   1. Motor enclosure: IP40
   2. Motors shall be of the high torque, low speed direct drive type, carefully matched to the fan load and furnished at the specified voltage and phase. High speed motors provided with a gearbox to reduce the operating speed of the fan shall not be permitted.
   3. Motors shall be an external rotor design. Internal rotor motors shall not be permitted.
   4. Motors shall be of the brushless DC type for maximum efficiency and speed controllability. No other motor type shall be accepted.
   5. Motors shall include wiring to the VFD that is installed by the factory to ensure proper function. Field-wiring between motors and VFDs shall not be permitted.
   6. Motors shall include Class B insulation.
D. Variable Frequency Drive (VFD):
   1. VFD enclosure: IP40
   2. VFD shall be factory programmed and designed for Modbus RS-485 communication with control devices via the Modbus RTU communication protocol for communication reliability and ease of integration with a building management system (BMS). Infrared (IR) or 0-10VDC communication protocols shall not be permitted.
   3. VFD shall be UL Listed for single phase input at the specified voltage.
   4. VFD shall be provided with factory-installed, plug-and-play wiring for ease of installation. Plug-and-play wiring shall include power and communication wiring pigtails that are designed for quick and easy termination in the field.
   5. VFD shall include thermistors for continuous monitoring of VFD's internal temperature.
   6. VFD shall include sensors for continuous monitoring of voltage and current.
   7. VFD shall include intelligent protection systems to prevent failures caused by over/under-voltage, over-current, over-temperature, and over-speed. VFDs without these protection features shall not be permitted.
   8. VFD shall include the most current firmware version as of the product's manufacturing date to ensure optimal performance. As a result of continuous development, the manufacturer reserves the right to update VFD firmware without notice.
E. Universal Ceiling Mount and Downtube:
   1. Fans shall be provided with a universal ceiling mount that is designed for fast and secure installation on a variety of building structures. Fans shall be capable of mounting to a fan-rated junction box (provided by others). Universal ceiling mount shall be constructed of heavy gauge steel and shall include a pivoting ball joint to accommodate pitches up to 4.5/12.
   2. Downtube shall be constructed of heavy gauge steel to provide a structural connection between the universal ceiling mount and fan motor.
   3. Universal ceiling mount and downtube shall be powder-coated for corrosion resistance and aesthetic appearance.
   4. Standard drop length between top of universal ceiling mount and top of airfoil blades shall be 1 foot. Optional drop lengths are also available in a 3 foot or 6 foot length.
F. Safety Retention Cable:
   1. Fans shall include 3/32 inch braided galvanized steel safety retention cable that is rated for a load of 133 pounds or greater. Safety retention cable shall be installed on the fan motor at the factory to ensure proper function. Field construction or installation of safety retention cables shall not be permitted.

G. Fire Control Panel Integration:
   1. Fans shall include a normally-closed, fan enable terminal for optional integration with a building's fire control panel. Normally-closed, electromechanical relay must be provided by others to make connection with fire control panel.
H. Options/Accessories:
   1. Finishes:
      a. Type: Anodize
         1. Fan Components: Airfoil Blades
         2. Colors: As selected by the Architect from the manufacturer's full range of colors
   2. Disconnect Switches:
      a. NEMA Rated: 3R
      b. Protection: Fused
      c. Positive electrical shut-off.
      d. Shipped loose for field mounting.
   3. AMPLIFY™ Overhead Fan Controls:
      a. Type: Advanced Touchscreen Control with BACnet and Temp/Humidity Sensors
      b. Controls shall be capable of operating one or multiple AMPLIFY™ overhead fans as specified. Controls shall provide start/stop, speed, and rotation direction control capabilities as well as diagnostic and fault history information for each connected fan.
      c. Controls shall include RJ45 ports for plug-and-play connection to overhead fans via CAT-5e communication cable in the field.
   4. CAT-5e Cable Length:
      a. Factory-Assembled Cable Type: Provide lengths as required
         1. Factory-assembled CAT-5e cable must be shielded 26-gauge cable with a drain wire and must be compliant with ISO 11801 to prevent network communication issues. Cable must be provided in pre-determined lengths (as specified) and terminated with shielded RJ45 connectors with a soldered drain by the factory. Wiring configuration must follow EIA/TIA T568B wiring pinout and individual cable lengths must not exceed 200 feet.
   5. Extended Mechanical Warranties:
      a. Type: 15 Yrs. (5 Yr. Ext.)
   6. Extended Electrical Warranties:
      a. Type: 5 Yrs. (2 Yr. Ext.)

3.1 MANUFACTURER'S INSTRUCTIONS
A. Compliance: Comply with manufacturer's product data, including technical bulletins, product catalog, and installation instructions.

3.2 EXAMINATION
A. Examine areas to receive fans. Notify the Engineer of conditions that would adversely affect installation or subsequent utilization and maintenance of fans. Do not proceed with installation until unsatisfactory conditions are corrected.

3.3 PREPARATION
A. Verify that the fan is to be installed in a location where the airfoils will be a minimum of 7 feet above the finished floor with a minimum of 3 feet of clearance to any obstructions.

B. If the building has a mezzanine or other elevated spaces that may be occupied by people, verify that no component of the fan can be reached from the highest level or deck. The fan must be positioned so that the tips of the airfoils are a minimum of 3 feet away from the furthest point that a person could extend an appendage outward.

C. If the fan is to be mounted in an area where materials or equipment may be elevated into its path, ensure that the floor is marked or painted to alert personnel of the overhead location of the fans.

D. If the building is equipped with a fire sprinkler system, verify that the placement of the fan will not interfere with correct sprinkler operation and that the fan installation complies with all national, state and local codes.

E. Check to see if the intended placement of the fan is directly below any building lights or skylights. Avoid installing fans directly below a light source to prevent a strobing effect that can be caused by fan rotation.

F. For best performance, fans must be installed with a two fan diameter minimum clearance between the center of the fan and radiant heaters or HVAC system discharges or intakes.

G. Verify that the mounting surface will bear the operating weight and maximum torque (twisting force) of the unit. The Structural Engineer of Record (SEOR) must perform a thorough evaluation of the mounting structure and determine all final mounting requirements before the fan is installed.

3.4 INSTALLATION

A. Install fan system as indicated in the Installation, Operation and Maintenance Manual (IOM) and contract drawings.

B. Install fans in accordance with manufacturer's instructions.

3.5 SYSTEM STARTUP

A. Refer to Installation, Operation, and Maintenance Manual (IOM).

3.6 CLEANING

A. Clean as recommended by manufacturer. Do not use material or methods which may damage finish surface or surrounding construction.

3.7 PROTECTION

A. Protect installed product and finished surfaces from damage during construction.

B. Protect installed fans to ensure that, except for normal weathering, fans will be without damage or deterioration at time of substantial completion

END OF SECTION - 233439